PHILIPS

Headphones

6000 Series

TAH6509

User manual

Register your product and get support at:
www.philips.com/support

Contents

1 Important safety instructions 2
Hearing safety 2
General information 2

2 Your Active Noise Canceling wireless headphones 4
What's in the box 4
Other devices 4
Overview of your wireless headphones 5

3 Get started 6
Charge the battery 6
App download 6
Pair for the first time 6
Pair with another Bluetooth device 7

4 Use your headphones 8
Connect to your Bluetooth device 8
Control ANC (Active Noise Cancelation) 8
Power on/off 9
Manage your calls and music 9
Voice Assistant 9
Headphones LED indicator status 10

5 Reset the headphones 11

6 Technical data 11

7 Notice 12
Declaration of conformity 12
Disposal of your old product and battery 12
Remove the integrated battery 12
Compliance with EMF 12
Environmental information 13
Notice of compliance 13

8 Trademarks 14

9 Frequently asked questions 15

1 Important safety instructions

Hearing safety

Danger

- To avoid hearing damage, limit the time you use headphones at high volume and set the volume to a safe level. The louder the volume, the shorter the safe listening time is.

Be sure to observe the following guidelines when using your headphones.

- Listen at reasonable volumes for reasonable periods of time.
- Be careful not to adjust the volume continuously upwards as your hearing adapts.
- Do not turn up the volume so high that you can't hear what's around you.
- You should use caution or temporarily discontinue use in potentially hazardous situations.
- Excessive sound pressure from headphones and headphones can cause hearing loss.
- Using headphones with both ears covered while driving is not recommended and may be illegal in some areas.
- For your safety, avoid distractions from music or phone calls while in traffic or other potentially dangerous environments.

General information

To avoid damage or malfunction:

Caution

- Do not expose headphones to excessive heat.
- Do not drop your headphones.
- Headphones shall not be exposed to dripping or splashing. (Refer to the IP rating of specific product)
- Do not allow your headphones to be submerged in water.
- Do not charge your headphones when the connector or socket is wet.
- Do not use any cleaning agents containing alcohol, ammonia, benzene, or abrasives.
- Use a clean, damp cloth to clean your headphones - especially the sound conduits and the microphone holes - regularly and avoid buildup of substances such as sweat or earwax.
- If any sweat or water droplets are left in the sound conduits, air holes or microphone holes, the sound level will temporarily drop or cut out entirely. This is not a malfunction. Use a soft, damp cloth to dry the headphones thoroughly. Alternatively, remove the earbud tips, turn the sound conduits downward and gently tap the headphones about five times on a dry cloth or similar to remove any water collected inside.
- Be sure the headphones are completely dry before charging and using. Avoid using disposable alcohol pads or other substances for cleaning.
- The integrated battery shall not be exposed to excessive heat such as sunshine, fire or the like.
- Danger of explosion if battery is incorrectly replaced. Replace only with the same or equivalent type.
- To achieve the specific IP rating, the charging slot cover must be closed.
- Disposal of a battery into fire or a hot oven, or mechanically crushing or cutting a battery, can result in an explosion.
- Leaving a battery in an extremely high temperature surrounding environment can result in an explosion or the leakage of flammable liquid or gas.
- A battery subjected to extremely low air pressure may result in an explosion or the leakage of flammable liquid or gas.
- Replacement of a battery with an incorrect type risks severely damaging the headphones and the battery (for example, in the case of some lithium battery types).
- If the headset is not used for a long time, the rechargeable battery will begin to lose its charge. To avoid this loss, please fully charge the battery at least once every three months.

- To avoid risk of fire, the equipment is supplied only by external power source which output shall comply with PS1 (with output capacity less than 15W).

Operating and storage temperatures and humidity

- Store in a place where the temperature is between -20°C (-4°F) and 50°C (122 °F) with up to 90% relative humidity.
- Operate in a place where the temperature is between 0°C (32°F) and 45°C (113 °F) with up to 90% relative humidity.
- Battery life may be shorter in high or low temperature conditions.

2 Your Active Noise Canceling wireless headphones

Congratulations on your purchase, and welcome to Philips! To fully benefit from the support that Philips offers, register your product at www.philips.com/support.
With these Philips headphones, you can:

- Enjoy convenient wireless handsfree calls
- Enjoy and control music wirelessly
- Switch between calls and music
- Enjoy noise cancellation

Quick start guide

Global Warranty

Safety leaflet

What's in the box

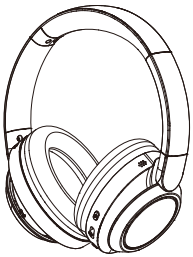

Philips Active Noise Canceling wireless headphones Philips TAH6509

USB charging cable (for charging only)

Other devices

A mobile phone or device (e.g. notebook, tablet, Bluetooth adapters, MP3 players etc) which supports Bluetooth and is compatible with the headphones (see 'Technical data' on page 10).

Overview of your wireless headphones

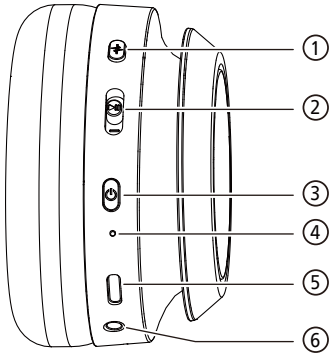

① ANC/Awareness mode button
② Multi-Function Button (MFB)
③ Power button
④ LED indicator
⑤ USB-C charging slot
⑥ Audio jack

3 Get started

Charge the battery

Note

- Before you use your headphones, place them in the charging box and charge the battery for 2 hours for optimum battery capacity and lifetime.
- Use only the original USB-C charging cable to avoid any damage.
- Finish your call before charging. Connecting the earpieces to charge will power them off.
- If the headset is not used for a long time, the rechargeable battery will begin to lose its charge. To avoid this loss, please fully charge the battery at least once every three months.

Connect the supplied USB charging cable to:

- The USB-C charging slot on the headphones and;
- The charger/USB port of a computer.

↳ LED turns white during charging and turns off when the headphones in fully charged.

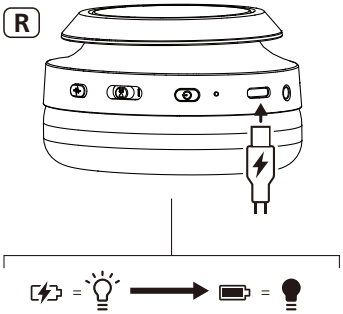

Tip

- Normally, a full charge takes two hours.

App download

Scan the QR code/press 'Download' button or search 'Philips Headphones' in the Apple App Store or Google Play to download the app.

Get Started

The Philips Headphones App puts you in charge of the music you are listening to. You can customize the sound so that your music and calling experience always best suit your needs.

Pair the headphones with your Bluetooth device for the first time

1 Make sure that the headphones are fully charged and powered off.

2 Press and hold the power button for 2 seconds, the headphones will be in pairing mode and ready to connect.

↳ The LED on headphones flash white and blue alternately.

↳ The headphones are now in pairing mode and are ready to pair with a Bluetooth device (e.g. a mobile phone).

3 Turn on the Bluetooth function of your Bluetooth device.

4 Pair the headphones with your Bluetooth device, refer to the user manual of your Bluetooth device.

Note

- After powering on, if the headphones can not find any previously connected Bluetooth device, please put them into pairing mode (press the power button for 5 seconds).

The following example shows you how to pair the headphones with your Bluetooth device.

1 Turn on the Bluetooth function of your Bluetooth device, select **Philips TAH6509.**

2 Enter the headphones' password "**0000**" (4 zeros) if prompted. For those devices featuring Bluetooth 3.0 or higher, there is no need to enter a password.

Philips TAH6509

Pair the headphones with another Bluetooth device

If you want to pair another Bluetooth device with the headphones, just put them into pairing mode (press the power button for 5 seconds), then discover the second device as per normal pairing.

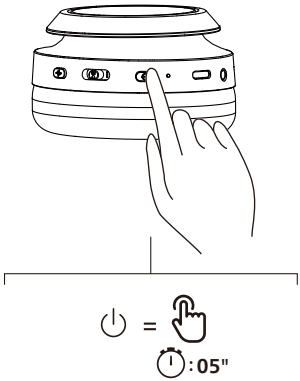

Note

- The headphones store 5 devices in the memory. If you try to pair more than 5 devices, the earliest paired device is replaced by the new one.

4 Use your headphones

Connect the headphones to your Bluetooth device

1 Turn on the Bluetooth function of your Bluetooth device.

2 Press and hold the MFB button to turn the headphones on.

↳ The white LED will turn on in two seconds

↳ The headphones are reconnected to the last connected mobile phone/Bluetooth device automatically

Tip

- If you turn on the Bluetooth function of your Bluetooth device after turning on the headphones, you have to go to the Bluetooth menu of the device and connect the headphones to the device manually.

Note

- In some Bluetooth devices, connection may not be automatic. In this case, you have to go to the Bluetooth menu of your device and connect the headphones to the Bluetooth device manually.

Control ANC (Active Noise Cancelation)

Different ANC modes can be toggled via single pressing ANC/Awareness mode button.

- ANC function is automatically activated when turn on headphones.
- Press the ANC button once, it will turn the ANC function off.
- Press the ANC turn once again, it will change to awareness mode.

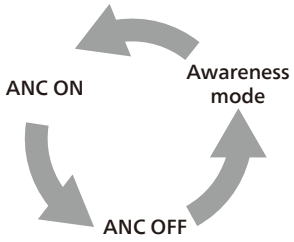

Task	Button	Operation
ANC ON	ANC button	Single press
ANC OFF	ANC button	Single press
Awareness mode	ANC button	Single press
Quick awareness	ANC button	Press and hold ANC button, exit when release

Power on/off

Task	Button	Operation
Turn the headphones on	⏻	Press and hold for 2 seconds
Turn the headphones off	⏻	Press and hold for 2 seconds

Manage your calls and music

Music control

Task	Button	Operation
Play or pause music	MFB	Single press
Next track	MFB	Push upward to “+” for 2 seconds
Previous track	MFB	Downward to “-” for 2 seconds
Adjust volume +	MFB	Push upward once to “+”
Adjust volume -	MFB	Downward once to “-”

Call control

Task	Button	Operation
Pick up	MFB	Single press
Hang up call/ Reject call	MFB	Press and hold for 1 second

Three Way Calling

Task	Button	Operation
Hold current call and accept an incoming call	MFB	Single press
Hold current call and reject an incoming call	MFB	Press and hold for 1 second
Switch between second-way call and three-way call	MFB	Single press

Voice Assistant

Task	Button	Operation
Trigger Voice (Siri/Google) Assistant	ANC button	Double press
Stop Voice Assistant	ANC button	Double press

Three Way Calling

Task	Button	Operation
Hold current call and accept an incoming call	MFB	Single press
Hold current call and reject an incoming call	MFB	Press and hold for 1 second
Switch between second-way call and three-way call	MFB	Single press

Headphones LED indicator status

Headphones status	Indicator
The headphones are connected to a Bluetooth device	Blue LED will be on 1 second
The headphones are ready for pairing	The LED flashes blue and white alternately
The headphones are on but not connected to a Bluetooth device	White LED blinks (auto turn off after 3 minutes)
Low battery level	White LED blinks once every 1 second

5 Reset the headphones

If you encounter any pairing or connection issue, you can follow the following procedure to reset your headphones to factory default settings.

1 On your Bluetooth device, go to the Bluetooth menu and remove **Philips TAH6509** from the device list.

2 Turn off the Bluetooth function of your Bluetooth device.

3 Turn on your headphones.

4 Press and hold Power button for 16 seconds at the same time.

5 Follow steps in “Use your headphones-connect the headphones to your Bluetooth device.”

6 Pair the headphones with your Bluetooth device, select **Philips TAH6509**.

6 Technical data

Headphones

- Music play time: (ANC off) 70 hours; (ANC on) 45 hours
- Talk time: (ANC off) 70 hours; (ANC on) 45 hours
- Charging time: 2 hours
- Rechargeable lithium ion battery (600 mAh)
- Bluetooth version: 5.3
- Compatible Bluetooth profiles:
  - HFP (Hands-Free Profile)
  - A2DP (Advanced Audio Distribution Profile)
  - AVRCP (Audio Video Remote Control Profile)
- Frequency range: 2.402-2.480GHz
- Transmitter power: < 10 dBm
- Operating range: Up to 10 meters (33 feet)
- Auto power off
- USB-C port for charging
- Dynamic bass
- Multi-point connection

Note

- Specifications are subject to change without notice.
- Battery life of playtime is approximate and may vary depending on application condition.

7 Notice

Declaration of conformity

Hereby, MMD Hong Kong Holding Limited declares that the product is in compliance with the essential requirements and other relevant provisions of RED Directive 2014/53/EU and UK Radio Equipment Regulations SI 2017 No 1206. You can find the Declaration of Conformity on www.philips.com/support.

Disposal of your old product and battery

Your product is designed and manufactured with high quality materials and components which can be recycled and reused.

This symbol on a product means that the product is covered by European Directive 2012/19/EU.

This symbol means that the product contains a built-in rechargeable battery covered by European Directive 2013/56/EU which cannot be disposed of with normal household waste. We strongly advise you to take your product to an official collection point or a Philips service centre to have a professional remove the rechargeable battery. Inform yourself about the local separate collection system for electrical and electronic products and rechargeable batteries. Follow local rules and never dispose of the product and rechargeable batteries with normal household waste. Correct disposal of old products and rechargeable batteries helps prevent negative consequences for the environment and human health.

Remove the integrated battery

If there is no collection/recycling system for electronic products in your country, you can protect the environment by removing and recycling the battery before disposing the headphones.

- Make sure the headphones is disconnected from the charging case before removing the battery.

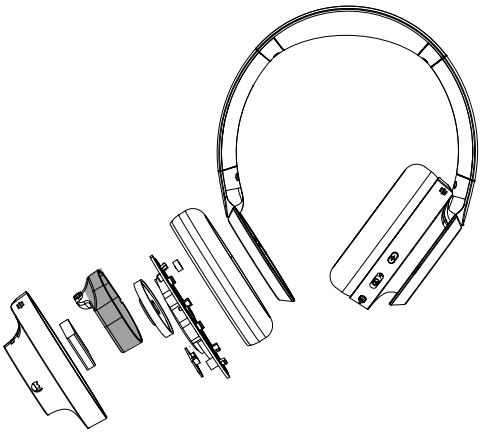

Compliance with EMF

This product complies with all applicable standards and regulations regarding exposure to electromagnetic fields.

Environmental information

All unnecessary packaging has been omitted. We have tried to make the packaging easy to separate into three materials: cardboard (box), polystyrene foam (buffer) and polyethylene (bags, protective foam sheet.)
Your system consists of materials which can be recycled and reused if disassembled by a specialized company. Please observe the local regulations regarding the disposal of packaging materials, exhausted batteries and old equipment.

Notice of compliance

The device complies with the FCC rules, Part 15. Operation is subject to the following two conditions:

1. **This device may not cause harmful interference, and**
2. **This device must accept any interference received, including interference that may cause undesired operation.**

FCC rules

This equipment has been tested and found to comply with the limits for a Class B digital device, pursuant to part 15 of the FCC Rules. These limits are designed to provide reasonable protection against harmful interference in a residential installation. This equipment generates, uses and can radiate radio frequency energy and, if not installed and used in accordance with the instruction manual, may cause harmful interference to radio communications.
However, there is no guarantee that interference will not occur in a particular installation. If this equipment does cause harmful interference to radio or television reception, which can be determined by turning the equipment off and on, the user is encouraged to try to correct the interference by one or more of the following measures:

- Reorient or relocate the receiving antenna
- Increase the separation between equipment and receiver
- Connect the equipment into an outlet on a circuit different from that to which the receiver is connected
- Consult the dealer or an experienced radio/TV technician for help

FCC Radiation Exposure Statement:

This equipment complies with FCC radiation exposure limits set forth for an uncontrolled environment.
This transmitter must not be co-located or operated in conjunction with any other antenna or transmitter.

Caution: The user is cautioned that changes or modifications not expressly approved by the party responsible for compliance could void the user's authority to operate the equipment.

Canada:

This device contains licence-exempt transmitter(s)/receiver(s) that comply with Innovation, Science and Economic Development Canada’s license-exempt RSS(s). Operation is subject to the following two conditions: (1) This device may not cause interference. (2) This device must accept any interference, including interference that may cause undesired operation of the device.

L'émetteur/récepteur exempt de licence contenu dans le présent appareil est conforme aux CNR d'Innovation, Sciences et Développement économique Canada applicables aux appareils radio exempts de licence.
L'exploitation est autorisée aux deux conditions suivantes : (1) L'appareil ne doit pas produire de brouillage; (2) L'appareil doit accepter tout brouillage radioélectrique subi, même si le brouillage est susceptible d'en compromettre le fonctionnement.
CAN ICES-003(B)/NMB-003(B)

This equipment complies with Canada radiation exposure limits set forth for uncontrolled environments.
This transmitter must not be co-located or operated in conjunction with any other antenna or transmitter.

8 Trademarks

Bluetooth

The Bluetooth® word mark and logos are registered trademarks owned by Bluetooth SIG, Inc. and any use of such marks by MMD Hong Kong Holding Limited is under license. Other trademarks and trade names are those of their respective owners.

Siri

Siri is a trademark of Apple Inc., registered in the U.S. and other countries.

Google

Google and Google Play are trademarks of Google LLC.

8 Frequently asked questions

My Bluetooth headphones do not turn on.
The battery level is low. Charge the headphones.

I cannot pair my Bluetooth headphones with my Bluetooth device.
The Bluetooth is disabled. Enable the Bluetooth feature on your Bluetooth device and turn on the Bluetooth device before you turn on the headphones.

How to reset pairing.
Let headphone stay in pairing mode (white and blue light flashes alternately), press and hold power button 16 seconds until blue LED light on.

I hear but cannot control music on my Bluetooth device (e.g. play/pause/skip forward/backward).
Make sure the Bluetooth audio source supports AVRCP (see 'Technical data' on page 11).

The volume level of the headphones is too low.
Some Bluetooth devices cannot link the volume level with the headphones through volume sync. In this case, you have to adjust the volume on your Bluetooth device independently to achieve an appropriate volume level.

The Bluetooth device cannot find the headphones.

- The headphones may be connected to a previously paired device. Turn off the connected device or move it out of range.
- Pairing may have been reset or the headphones have been previously paired with another device. Pair the headphones with the Bluetooth device again as described in the user manual. (see 'Pair the headphones with another Bluetooth device' on page 7).

My Bluetooth headphones are connected to a Bluetooth stereo enabled mobile phone, but music only plays on the mobile phone speaker.
Refer to the user manual of your mobile phone. Select to listen to music through the headphones.

The audio quality is poor and crackling noise can be heard.

- The Bluetooth device is out of range. Reduce the distance between your headphones and Bluetooth device, or remove obstacles between them.
- Charge your headphones.

Clean your headphones regularly.

- Use a clean, damp cloth to clean your headphones - especially the sound conduits and the microphone holes - regularly and avoid buildup of substances such as sweat or earwax.
- If any sweat or water droplets are left in the sound conduits, air holes or microphone holes, the sound level will temporarily drop or cut out entirely. This is not a malfunction. Use a soft, damp cloth to dry the headphones thoroughly. Alternatively, remove the earbud tips, turn the sound conduits downward and gently tap the headphones about five times on a dry cloth or similar to remove any water collected inside.
- Be sure the headphones are completely dry before charging and using. Avoid using disposable alcohol pads or other substances for cleaning.

Charge your headphones regularly.

If the headset is not used for a long time, the rechargeable battery will begin to lose its charge. To avoid this loss, please fully charge the battery at least once every three months.

For further support, visit www.philips.com/support.

2024©MMD Hong Kong Holding Limited. All rights reserved.
Specifications are subject to change without notice.
Philips and the Philips Shield Emblem are registered trademarks of Koninklijke Philips N.V. and are used under license. This product has been manufactured by and is sold under the responsibility of MMD Hong Kong Holding Limited or one of its affiliates, and MMD Hong Kong Holding Limited is the warrantor in relation to this product. All other company and product names may be trademarks of their respective companies with which they are associated.

UM_TAH6509_00_EN_V1.0