PHILIPS

Wireless Speaker

TAS1505

User manual

Register your product and get support at
www.philips.com/support

Contents

1 Important 2
Safety 2

2 Your wireless speaker 3
Introduction 3
What's in the box 3
Overview of the speaker 3

3 Get started 4
Charge the built-in battery 4
Turn on/off 4

4 Play from Bluetooth devices 5
Play from Bluetooth devices 5
Control playback 5

5 Product information 6

6 Troubleshooting 7
General 7
Bluetooth 7

7 Notice 8
Compliance 8
Care of the environment 8
FCC Statement 8
Trademark notice 9

1 Important

Safety

Important safety instructions

- Make sure that the power supply voltage corresponds to the voltage on the back or the underside of the unit.
- The speaker shall not be exposed to dripping or splashing.
- Do not place any source of danger on the speaker (e.g. liquid filled objects, lit candles).
- Make sure that there is enough free space around the speaker for ventilation.
- Please use the speaker safely in an environment with temperature between 0℃ and 45℃ .
- Only use attachments and accessories specified by the manufacturer.

Battery safety precautions

- Danger of explosion if a battery is incorrectly replaced. Replace only with the same or equivalent type.
- A battery (battery pack or battery installed) shall not be exposed to excessive heat such as sunshine, fire or the like.
- A battery in extreme high or low temperatures during use, storage or transportation, and low air pressure at high altitude can pose safety hazards.
- Do not replace a battery with an incorrect type that can defeat a safeguard (for example, some lithium battery types).
- Disposing a battery into fire or a hot oven, mechanically crushing or cutting a battery can result in an explosion.
- Leaving a battery in an extremely high temperature surrounding, or an extremely low air pressure environment may result in an explosion or leakage of flammable liquid or gas.

Warning

- Never remove the casing of this speaker.
- Never lubricate any part of this speaker.
- Place this speaker on a flat, hard and stable surface.
- Never place this speaker on other electrical equipment.
- Only use this speaker indoors. Keep this speaker away from water, moisture and liquid-filled objects.
- Keep this speaker away from direct sunlight, naked flames or heat.
- Risk of explosion if a battery is replaced by an incorrect type.

2 Your portable speaker

Congratulations on your purchase, and welcome to Philips! To fully benefit from the support that Philips offers, register your product at www.philips.com/welcome.

What's in the box

Check and identify the contents of your package:

- Speaker
- USB cable
- Quick start guide
- Safety sheet
- Worldwide warranty
- Lanyard

Overview of the speaker

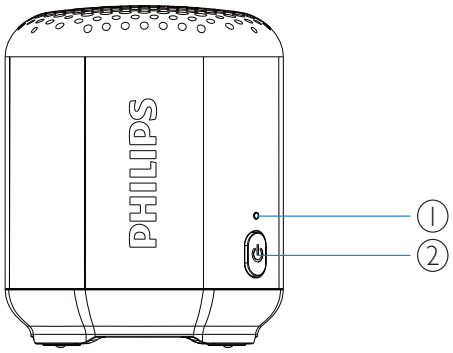

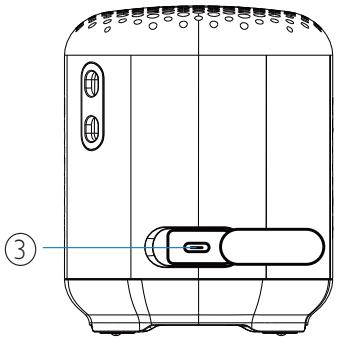

① LED indicator

- Indicate battery or Bluetooth connection status.

② ⏻

- Turn the speaker on or off.

③ DC IN

- Charge the built-in battery.

3 Get started

Always follow the instructions in this chapter in sequence.

Charge the built-in battery

The speaker is powered by a built-in rechargeable battery.

Note

- Before use, fully charge the built-in battery.
- The USB Type C socket is for charging only.
- It takes you approximately two hours to fully charge the battery.
- Rechargeable battery has a limited number of charge cycles. Battery life and number of charge cycles vary by use and settings.

Connect the USB-C socket on the speaker to an outlet (5V ⎓ 0.5A) by using the provided USB cable.

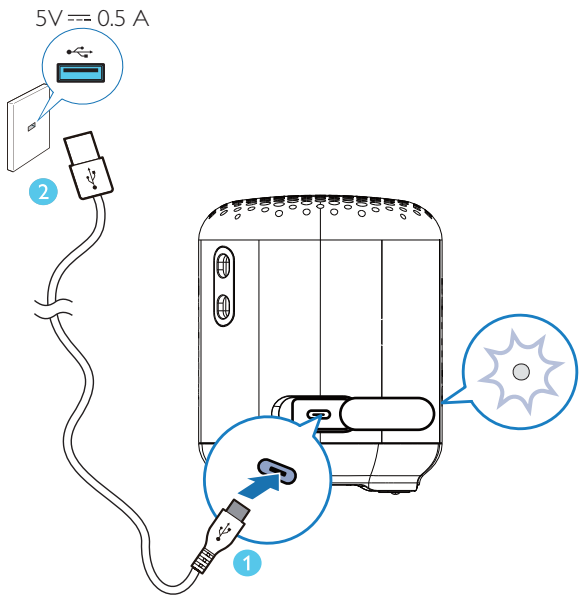

Power on

↳ When the speaker is being charged, LED is solid Red.

↳ When the speaker is fully charged, LED is solid Blue.

Power off

↳ When the speaker is being charged, LED is solid Red.

↳ When the speaker is fully charged, LED is off.

Turn on/off

- To turn the speaker on, press and hold "⏻" for two seconds. You will hear the prompt sound and Blue LED indicator blinks.

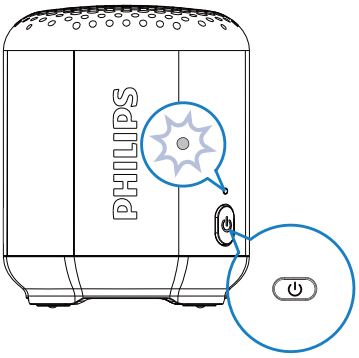

- To turn the speaker off, press and hold " ⏻ " for two seconds. You will hear the prompt sound and Blue LED indicator turn off.
- Auto off in 15 minutes if no Bluetooth connection.

4 Play from Bluetooth devices

With this speaker, you can listen to audio from Bluetooth-enabled devices.

Note

- The speaker can memorize a maximum of eight paired devices. The ninth paired device will replace the first one.
- Any obstacle between this speaker and a Bluetooth device can reduce the operational range.
- To clear the pairing information, press and hold ⏻ for 5 seconds until you hear the prompt sound, and the LED indicator blinks blue.
- Keep away from any other electronic device that may cause interference.
- The operational range between this speaker and a Bluetooth device is approximately 20 meters (66 feet).

Connect a device

1 Press ⏻ for 2 seconds to turn the speaker on.
   » The LED indicator blinks blue.

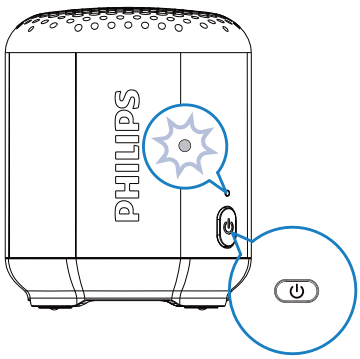

2 On your Bluetooth device, enable Bluetooth and search for Bluetooth devices that can be paired.

3 Select [Philips S1505] displayed on your device for pairing and connection. If necessary, input "0000" as the pairing password.
   » After successful pairing and connection, you'll hear the prompt sound, and the LED indicator turns solid blue.
   - If you cannot find [Philips S1505] on your device, hold down the Power button for 2 seconds to power off before rebooting, and long press it for 2 seconds to enter into pairing mode.

4 Play audio on your Bluetooth device to start streaming music.

Tip

- You can use your Bluetooth device to control play.

LED indicator (blue)

Indicator	Bluetooth connection status
Fast blinking (2Hz)	Pairing
Slow blinking (1Hz)	Connecting
Solid blue	Connected

Disconnect a device

- Disable Bluetooth on your device; or
- Move the device beyond the communication range.
   » The speaker beeps twice, and the LED indicator blinks blue.

Note

- Before connecting another Bluetooth device, disconnect the current device first.

Reconnect a device

When you turn on the speaker, it will reconnect the last connected device automatically; If not, select [Philips S1505] on your Bluetooth device to start connection.

5 Product information

Note

- Product information is subject to change without prior notice.

Amplifier

Rated Output Power	2.5W RMS
Frequency Response	150Hz-18kHz
Signal to Noise Ratio	> 70 dBA

Speaker

Speaker Impedance	4 ohm
Speaker Driver	1.5" full range
Sensitivity	>80dB/m/W

Bluetooth

Bluetooth Version	V5.0
Bluetooth Profile	A2DP V1.3, AVRCP V1.6
Bluetooth Frequency Brand	2.4GHz ~ 2.48GHz
Bluetooth Range	20 m (Free space)

General information

Power Supply (through micro USB socket)	5 V, 0.5 A
Built-in Li-polymer Battery	3.7 V,480 mAh
Dimensions - Main Unit (W x H x D)	64 x 64 x 78mm
Weight - Main Unit	0.14 kg
Operation Ambient	0℃~40℃
IP protection class	IPX7*

*The IPX7 rating means the speaker driver can be submerged for up to 30 minutes at a depth of up to 1 m.

6 Troubleshooting

Warning

- Never remove the casing of this device.

To keep the warranty valid, never try to repair the system yourself.
If you encounter problems when using this device, check the following points before requesting service. If the problem remains unsolved, go to the Philips Web page (www.philips.com/support). When you contact Philips, make sure that the device is nearby and the model number and serial number are available.

General

No power

- Recharge your speaker.

No sound

- Make sure that your Bluetooth device is within the effective operational range.

No response from the speaker

- Recharge the speaker.

About Bluetooth device

The audio quality is poor after connection with a Bluetooth-enabled device.

- The Bluetooth reception is poor. Move the device closer to this product or remove any obstacle between them.

Fail to find [Philips S1505] on your device for pairing.

- If you cannot find [Philips S1505] on your device, hold the ⏻ for 2 seconds to power off, and then long press the button for 6 seconds to clear the pairing information / enter pairing mode.

Cannot connect with the device.

- The Bluetooth function of the device is not enabled. Refer to the user manual of the device for how to enable the function.
- This product is already connected with another Bluetooth-enabled device. Disconnect that device and then try again.

The paired device connects and disconnects constantly.

- The Bluetooth reception is poor. Move the device closer to this product or remove any obstacle between them.
- For some devices, Bluetooth connection may be deactivated automatically as a power-saving feature. This does not indicate any malfunction of this product.

7 Notice

Any changes or modifications made to this device that are not expressly approved by **MMD Hong Kong Holding Limited** may void theuser's authority to operate the equipment.

Compliance

Hereby, **TP Vision Europe B.V.** declares that this product is in compliance with the essential requirements and other relevant provisions of Directive 1999/5/EC. You can find the Declaration of Conformity on www.philips.com/support.

Care of the environment

Disposal of your old product and battery

Your product is designed and manufactured with high quality materials and components, which can be recycled and reused.

This symbol on a product means that the product is covered by European Directive 2012/19/EU.

This symbol means that the product contains a built-in rechargeable battery covered by European Directive 2013/56/EU which cannot be disposed of with normal household waste. We strongly advise you to take your product to an official collection point or a Philips service centre to have a professional remove the rechargeable battery.
Inform yourself about the local separate collection system for electrical and electronic products and rechargeable batteries. Follow local rules and never dispose of the product and rechargeable batteries with normal household waste. Correct disposal of old products and rechargeable batteries helps prevent negative consequences for the environment and human health.

Caution

- Removal of the built-in battery invalidates the warranty and may destroy the product.

Always bring your product to a professional to remove the built-in battery.

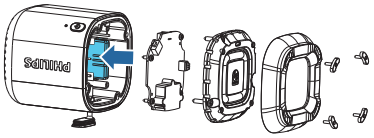

Environmental information

All unnecessary packaging has been omitted. We have tried to make the packaging easy to separate into three materials: cardboard (box), polystyrene foam (buffer) and polyethylene (bags, protective foam sheet.)
Your system consists of materials which can be recycled and reused if disassembled by a specialized company. Please observe the local regulations regarding the disposal of packaging materials, exhausted batteries and old equipment.

Disposal of a battery into fire or a hot oven, or mechanically crushing or cutting of a battery, that can result in an explosion.

FCC information

NOTE: This equipment has been tested and found to comply with the limits for a Class B digital device, pursuant to Part 15 of the FCC Rules. These limits are designed to provide reasonable protection against harmful interference in a residential installation. This equipment generates, uses and can radiate radio frequency energy and, if not installed and used in accordance with the instructions, may cause harmful interference to radio communications.

However, there is no guarantee that interference will not occur in a particular installation. If this equipment does cause harmful interference to radio or television reception, which can be determined by turning the equipment off and on, the user is encouraged to try to correct the interference by one or more of the following measures:

- Reorient or relocate the receiving antenna.
- Increase the separation between the equipment and receiver.
- Connect the equipment into an outlet on a circuit different from that to which the receiver is connected.
- Consult the dealer or an experienced radio / TV technician for help.

FCC&IC Warning:

- This equipment should be installed and operated with minimum distance 20cm between the radiator and your body.
- Changes or modifications to this unit not expressly approved by the party responsible for compliance could void the user's authority to operate the equipment.

IC-Canada: CAN ICES-003(B)/NMB-003(B)

This device contains licence-exempt transmitter(s) / receiver(s) that comply with Innovation, Science and Economic Development Canada's licence-exempt RSS(s). Operation is subject to the following two conditions:

1. This device may not cause interference.
2. This device must accept any interference, including interference that may cause undesired operation of the device.

Avis d'Industrie Canada: CAN ICES-003(B)/NMB-003(B)

L'émetteur/récepteur exempt de licence contenu dans le présent appareil est conforme aux CNR d'Innovation, Sciences et Développement économique Canada applicables aux appareils radio exempts de licence. L'exploitation est autorisée aux deux conditions suivantes :

1. L'appareil ne doit pas produire de brouillage;
2. L'appareil doit accepter tout brouillage radioélectrique subi, même si le brouillage est susceptible d'en compromettre le fonctionnement.

Trademark notice

Bluetooth®

The Bluetooth ® word mark and logos are registered trademarks owned by the Bluetooth SIG, Inc. and any use of such marks by **MMD Hong Kong Holding Limited** is under license. Other trademarks and trade names are those of their respective owners.

Specifications are subject to change without notice.
Philips and the Philips Shield Emblem are registered trademarks of
Koninklijke Philips N.V. and are used under license.
This product has been manufactured by and is sold under the
responsibility of MMD Hong Kong Holding Limited or one of its affiliates,
and MMD Hong Kong Holding Limited is the warrantor in relation to this product.

TAS1505_00_UM_V1.0