bright box

Member of ZURICH

Remoto 3

User manual
And
Installation guide

This device complies with part 15 of the FCC Rules. Operation is subject to the following two conditions: (1) This device may not cause harmful interference, and (2) this device must accept any interference received, including interference that may cause undesired operation.

PART NAME:	PART NO:
Remoto 3 Pro TCU	TCU 3.0.0.1 3G

REMOTE ENGINE START KIT

Remoto 3 Pro TCU x 1

Sticker x 2

REQUIRED TOOLS

Philip screw driver

Socket driver 10mm

Cutter plier

10 &12 mm spanner

Plastic remover

Mechanical Pliers

REMOTO 3 CONNECTIONS

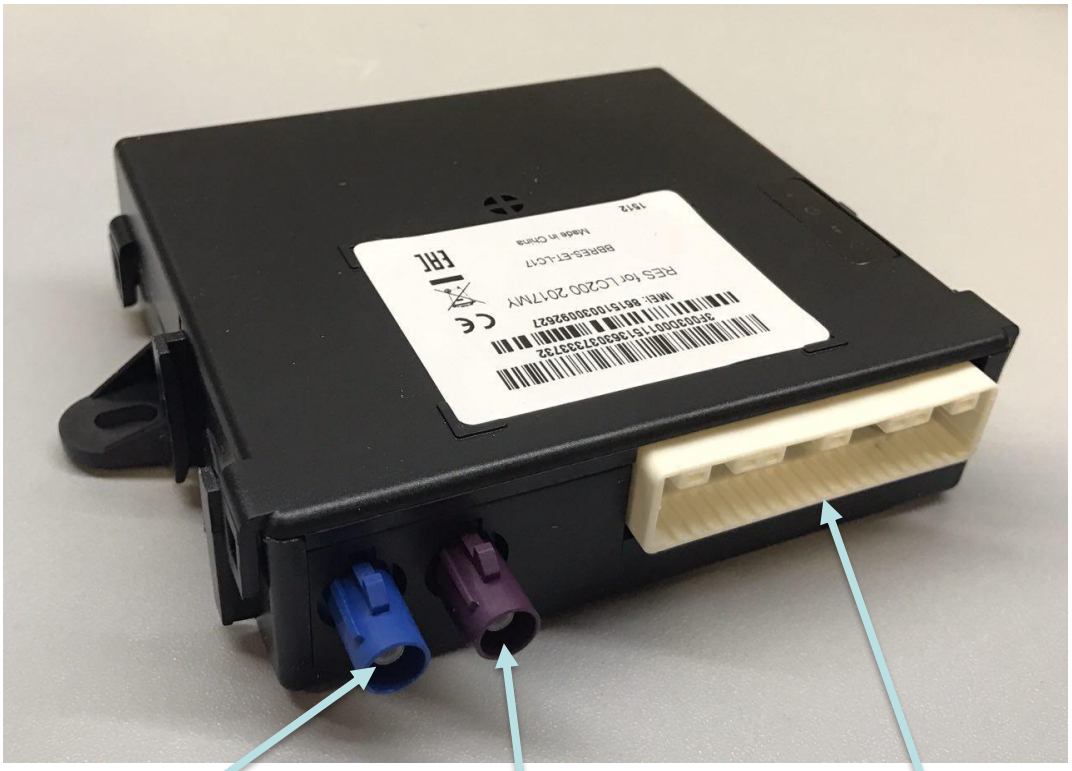

External GPS antenna (optional)

External GSM antenna (optional)

Vehicle harness socket

USER INFORMATION ABOUT REMOTO 3

Remoto 3 is a telematic service and information complex. The complex consists of a telematic unit connected to the system of the car through cable and the mobile application.

The mobile application is installed on the smartphone of the user. Supported operation systems:
1. Android (the version from 6 and above)
2. iOS (the version from 8 and above)

Remoto 3 possess functions of remote car control and informing. The client registered in system has opportunity to use the following functions:
1. Lock/Unlock central locking of the car;
2. Display of the status doors, hood, trunk of the car;
3. Remote Start/Stop of the engine of the car;
4. Easy search car on the parking;
5. Definition of route of the movement of the car;
6. Data acquisition about car speed;
7. Data acquisition about location of the car, temperature in interior and around
finding of the car;
8. Obtain automatic internal notice at punch;
9. The notification if the car exceeds admissible speed or leaves in advance designated zone.

Use of Remoto 3 is possible only at constant joint of the application with the Internet (mobiles operators or Wi-Fi networks).
Use of Remoto 3 can be difficult or it’s impossible if the car is on underground parking or carport parking and also in places where use of GPRS or 3G is not available and there is no mobile communication.

IMPORTANT NOTICE:

This manual has been designed for technicians who are qualified in the proper procedures of vehicle safety, handling and accessories installation. The technicians should be able to carry out installation procedures when giving instructions by an experienced technician in a supervisory role.

Marks:

Stop & Check	Stop proceedings & check the notes to avoid any vehicles damage.
Safety Concern	Operate carefully to protect yourself from injury.
Important Notice	Proceed carefully to ensure a quality installation. Check right after installation.
General Process	Specific processes for quality installation. Check these points during installation.
Tools	Recommended tools for specific process

POST INSTALLATION SUGGESTIONS:

Do not drop the main module or other breakable items.
Use seat and floor covers to keep the vehicle clean and prevent damage.
Place all removed parts in a protected surface, not to get harmed.
Sort removed parts in groups so that they can be reassembled correctly.
Take care not to scratch any part of the vehicle.
Tighten all modules and other parts screws by hand

If you are carrying out any electrical work please perform the following:

Disconnect the negative battery cable prior to installation.
Do not pull out the wires when disconnecting connectors. Hold the connectors and pull them out.
Route the wires according to TMC wiring standards.
When using wire ties, do not forget to clip the extra surplus after securing.
Do not touch the positive terminal with any tool when handling the cable.

INSTALLATION PROCEDURE

Disconnect the negative battery cable prior to installation of Remoto

REMOVE INSTRUMENT PANEL FINISH CUSHION RH

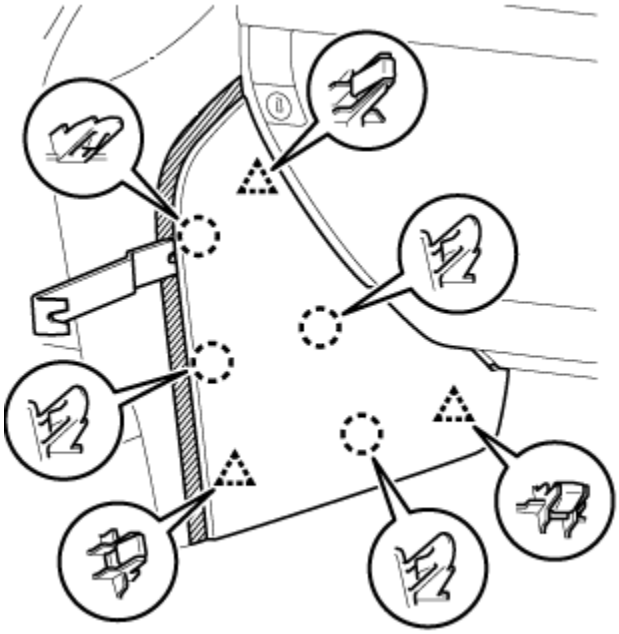

Using a moulding remover , detach the 4 claws and 3 clips and remove the instrument panel finish panel cushion.

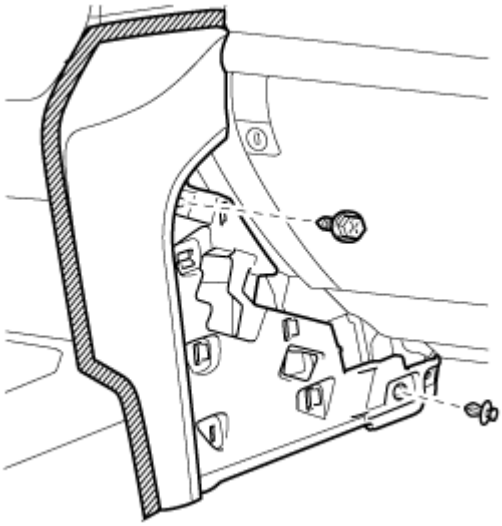

Remove the clip and screw.

2. REMOVE LOWER INSTRUMENT PANEL PAD SUB-ASSEMBLY RH

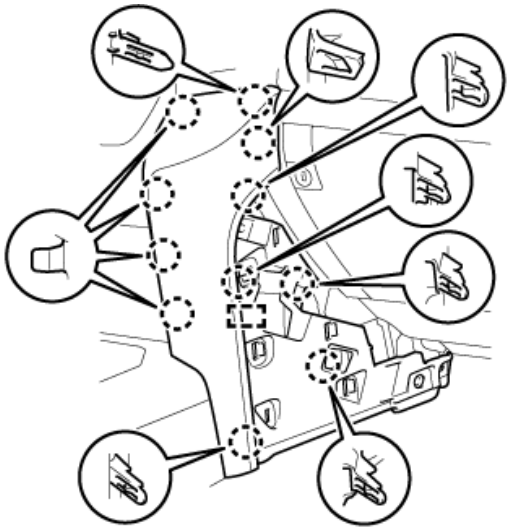

Detach the 11 claws and guide and remove the lower instrument panel pad sub-assembly RH.

3. REMOVE FRONT DOOR SCUFF PLATE RH

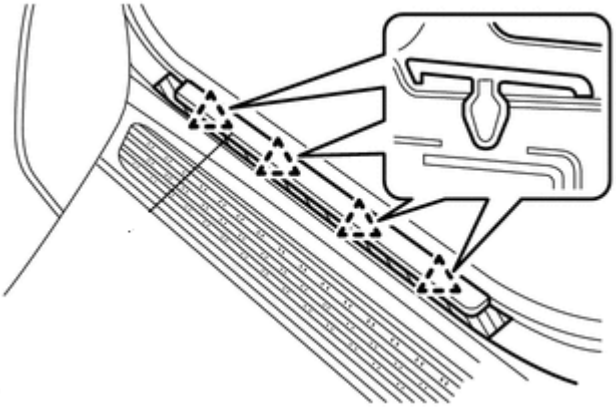

Detach the 4 claws and pull the scuff plate

4. REMOVE INSTRUMENT PANEL UNDER COVER SUB-ASSEMBLY

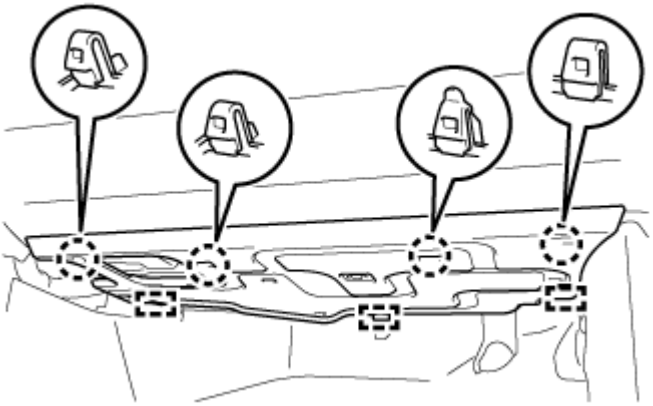

Detach the 4 claws and 3 guides. Disconnect the connector and remove the No. 2 instrument panel under cover sub-assembly.

5. REMOVE LOWER INSTRUMENT PANEL AIRBAG ASSEMBLY (w/ Passenger Side Knee Airbag VXR)

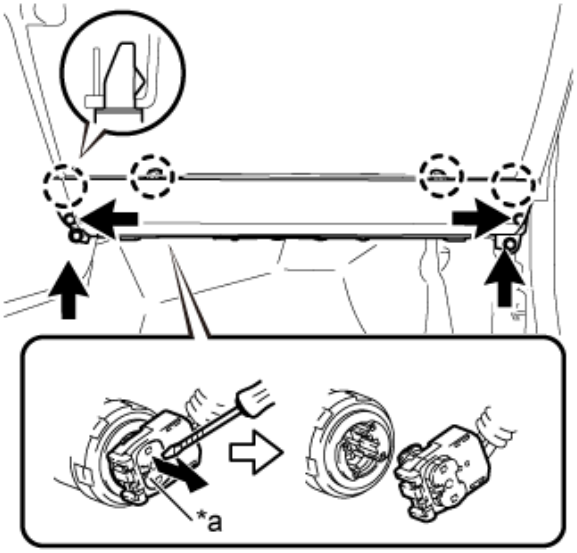

1.Remove the 4 bolts.

2.Detach the 4 claws and remove the front passenger side knee airbag assembly.

3.Using a screwdriver, release the connector lock and disconnect the airbag connector.

7. REMOVE INSTRUMENT CLUSTER FINISH PANEL GARNISH

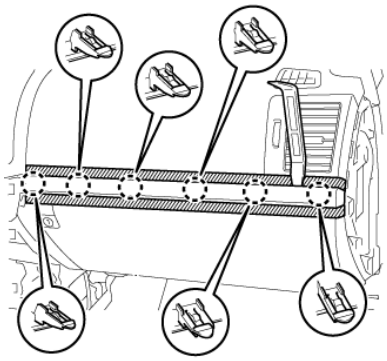

Using a moulding remover , detach the 6 claws and remove the instrument cluster finish panel garnish.

8. REMOVE INSTRUMENT PANEL BOX DOOR KNOB

Using a moulding remover , detach the 2 claws and remove the instrument panel box door knob.

9. REMOVE LOWER NO. 2 INSTRUMENT PANEL FINISH PANEL

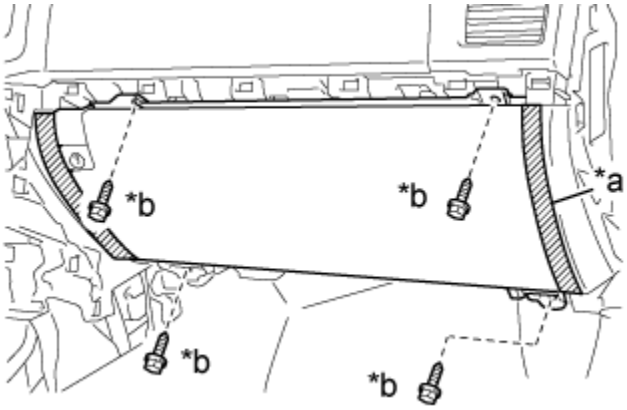

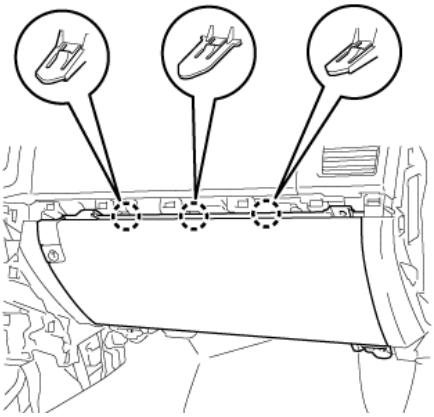

Remove the 4 screws Detach the 3 claws Disconnect the connector and remove the lower instrument panel finish panel.

Installation and Configuration of Remoto

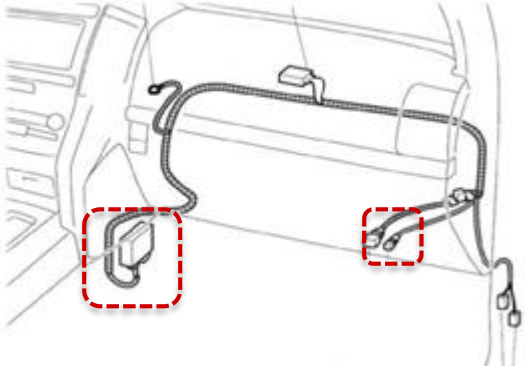

Connect the 5 Pin connector and route the cable as shown the images and mount the Remoto module on the RH side console as shown the illustration

1. INSTALL GLOVE BOX LIGHT ASSEMBLY

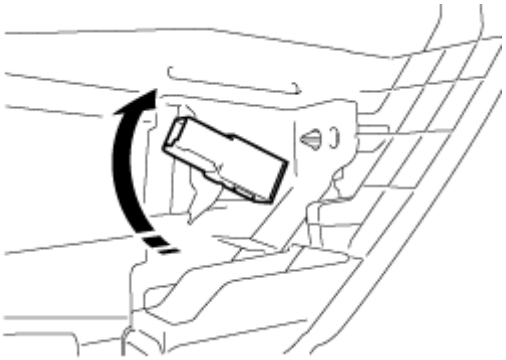

Install the glove box light assembly and twist it in the direction indicated by the arrow.

2. INSTALL LOWER INSTRUMENT PANEL FINISH PANEL

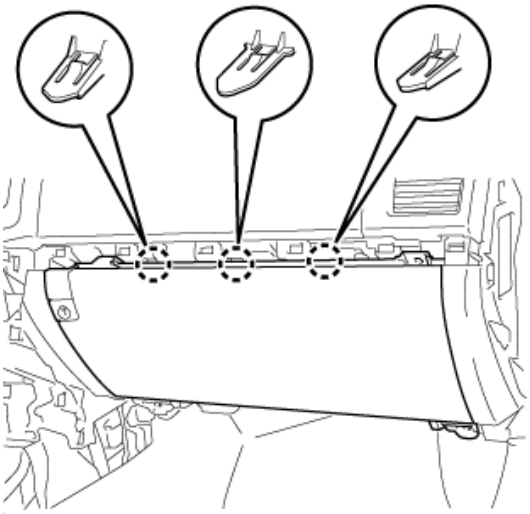

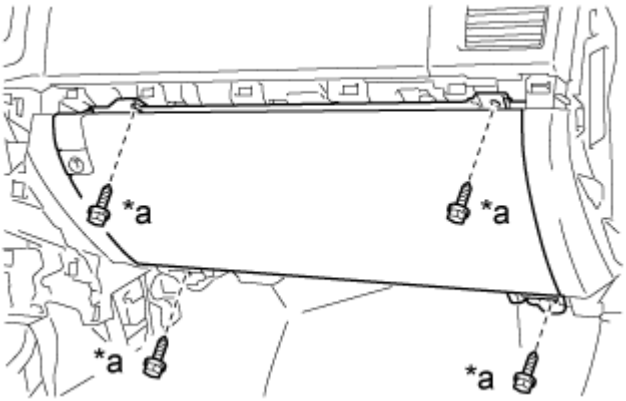

1.Connect the connector. 2. Attach the 3 claws to install the lower instrument panel finish panel. Install the 4 screws

3. INSTALL INSTRUMENT PANEL BOX DOOR KNOB

Attach the 2 claws to install the instrument panel box

4. INSTALL NO. 3 INSTRUMENT CLUSTER FINISH PANEL GARNISH

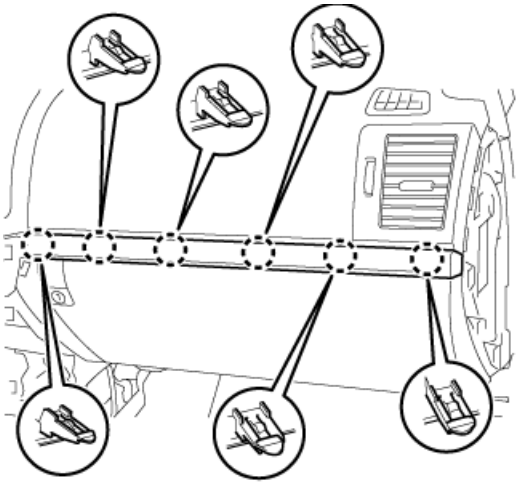

Attach the 6 claws to install the instrument cluster finish panel garnish

5. INSTALL LOWER INSTRUMENT PANEL AIRBAG ASSEMBLY (w/ Passenger Side Knee Airbag)

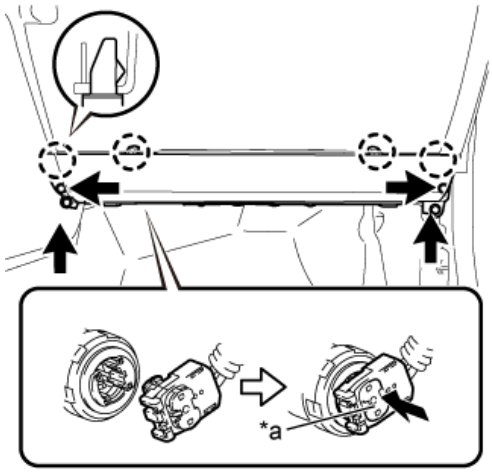

1.Check that the ignition switch is off.

2.Check that the cable is disconnected from the negative (-) battery terminal.
3.Connect the airbag connector and lock the connector lock.
4. Attach the 4 claws to install the front passenger side knee airbag assembly.
5.Install the 4 bolts.

Notice: When handling the airbag connector, take care not to damage the airbag wire harness.

7. INSTALL NO. 2 INSTRUMENT PANEL UNDER COVER SUB-ASSEMBLY (w/ Floor Under Cover)

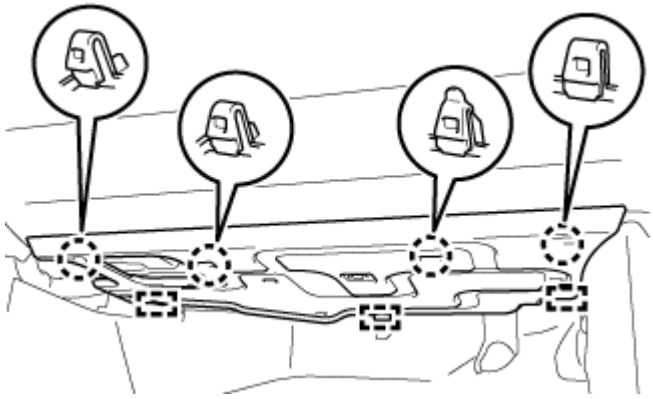

1.Connect the connector.

2.Attach the 3 guides.

3.Attach the 4 claws to install the instrument panel under cover sub-assembly.

8. INSTALL LOWER INSTRUMENT PANEL PAD SUB-ASSEMBLY RH

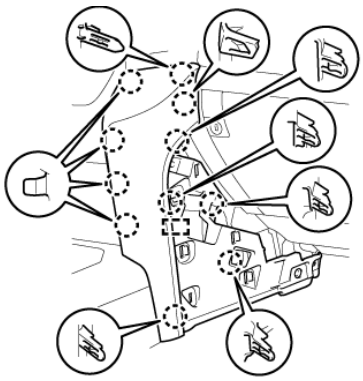

Attach the 11 claws and guide to install the lower instrument panel pad sub-assembly RH.

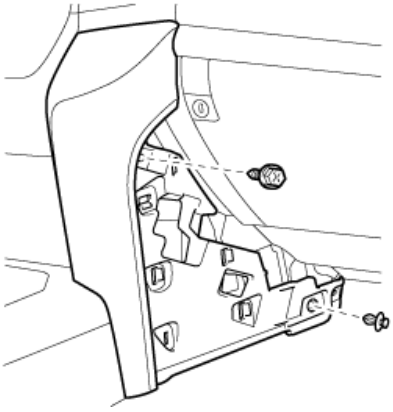

Install the screw and clip.

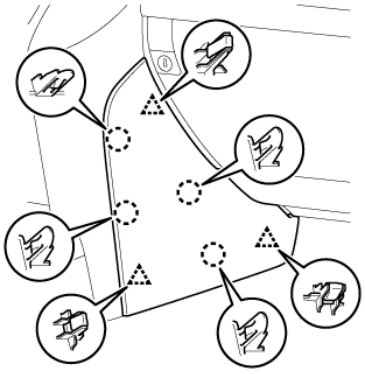

Attach the 4 claws and 3 clips to install the instrument panel finish panel cushion.

Note: see the configuration manual for Remoto configuration and testing.

ACCESSORY FUNCTIONAL VERFICATION:

Check the operations of the individual functions of the accessory. Tick the box after confirming its operation.

S/N	Item Name	Operational Description	Check
1	Key transmitter	Press Lock / Un lock by pressing remote	☐
2	Start the car by PTS	By Pressing push to start button	☐
3			☐
			☐

VEHICLE AUDITING:

Check all those items which might be affected during installation of the accessory. Tick the box after confirming its operation.

Serial	Item Name	Operational Description	Check
1	Remote	Lock & Unlock By RM	☐
2	Remote	Engine start by remote	☐
3	Cluster	Check any lights appear in information display	☐
4	Hazard Button	Make sure hazard switch is working	☐
5	A/C	Make sure aircon working normal	☐
6	AVN	Make sure avn is working normal	☐

How to use:

Please, download and install Remoto mobile app onto your mobile device (both Android and iOS-based supported).

Connected user role requires for a user to input VIN number of the car (already added to the Profile or create new car and then input VIN) and verify Connected Car with the Proof of ownership procedure.
Customer can activate Dongle with 2 different ways – using Device Serial number or vehicle VIN. Device serial number is a QR-code printed on a dongle, this option supported by all models. Activation by VIN can be supported by limited list of vehicles (details should be described on the installation manual).

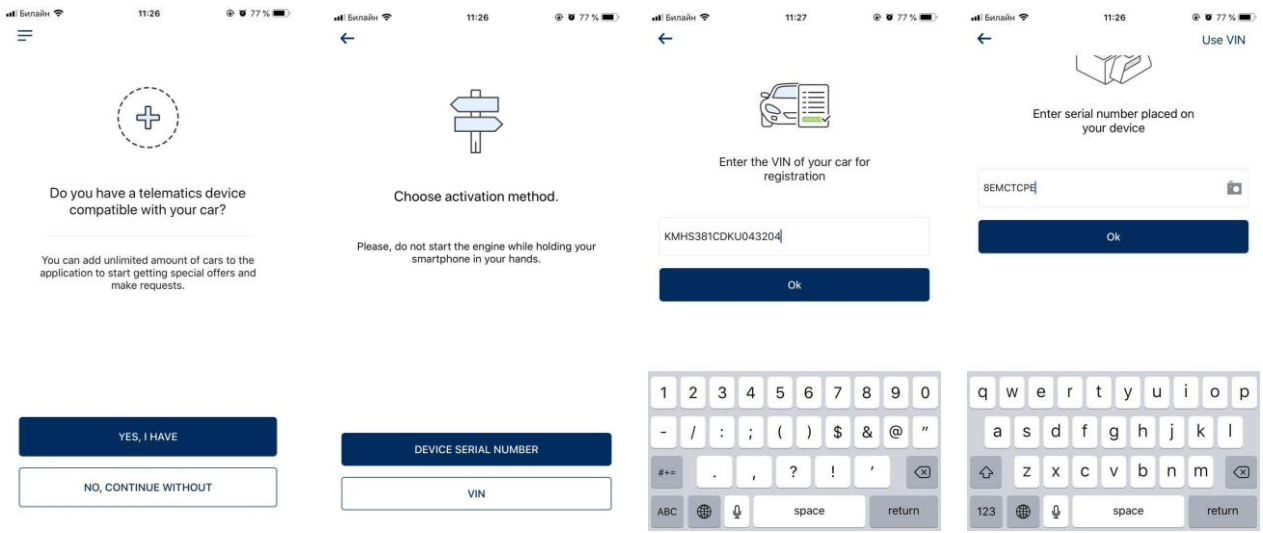

After entering Device serial number (or scanning QR-code from sticker) user will be asked to input VIN number, or confirm VIN number correctness, if vehicle supporting VIN reading from OBD.
After entering VIN number user will be asked:
To choose Dealer – if VIN number is successfully recognized (model and year of production chosen automatically)
To choose Model, year of production, and Dealer (all fields are obligatory) – if VIN number is not recognized

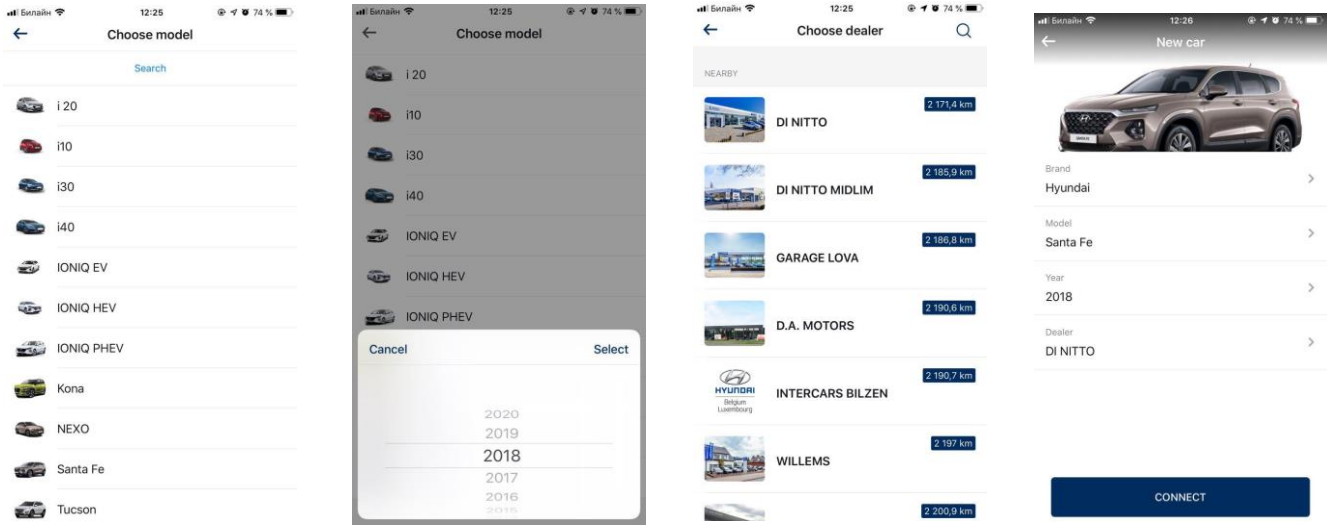

Last step is a procedure of verifying Connected Car suggests user to turning off and turning on the engine (Proof of ownership) and explicitly activate automatic VHC and location tracking services.

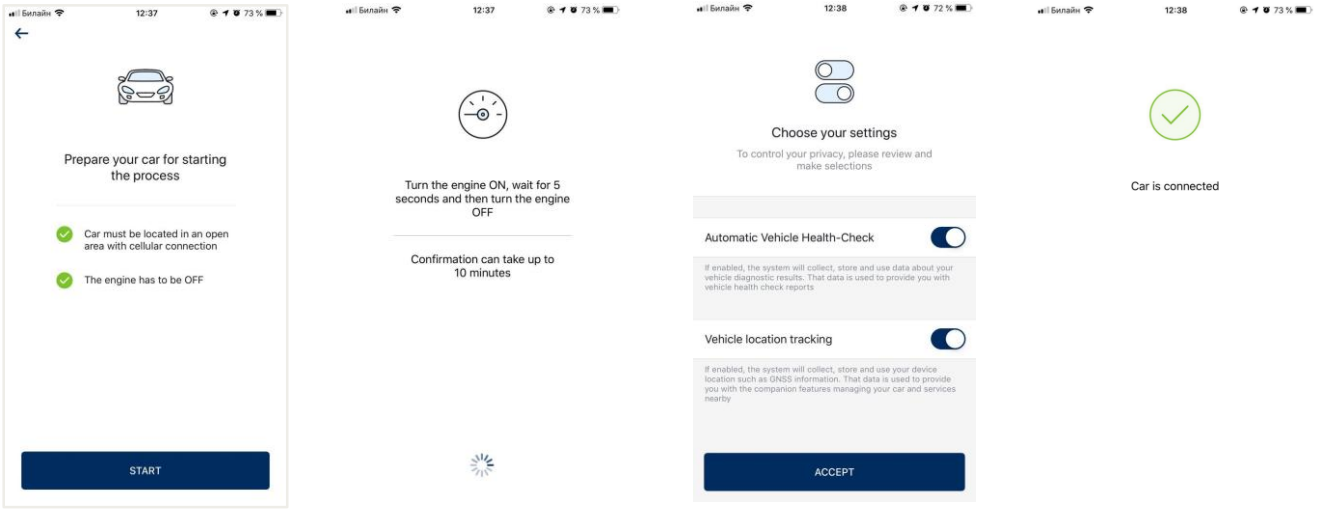

Customer activates Automatic Health Check and Vehicle location tracking to reach an access to all available in the Mobile app functions.
If user decided to turn-off Automatic Health Check – system will not run VHC automatically (option can be activated in settings at any time).

NOTE:

This equipment has been tested and found to comply with the limits for a Class B digital device, pursuant to part 15 of the FCC Rules. These limits are designed to provide reasonable protection against harmful interference in a residential installation. This equipment generates uses and can radiate radio frequency energy and, if not installed and used in accordance with the instructions, may cause harmful interference to radio communications. However, there is no guarantee that interference will not occur in a particular installation. If this equipment does cause harmful interference to radio or television reception, which can be determined by turning the equipment off and on, the user is encouraged to try to correct the interference by one or more of the following measures:

- Reorient or relocate the receiving antenna.
- Increase the separation between the equipment and receiver.
- Connect the equipment into an outlet on a circuit different from that to which the receiver is connected.
-Consult the dealer or an experienced radio/TV technician for help

Changes or modifications not expressly approved by the party responsible for compliance could void the user's authority to operate the equipment. This device complies with Part 15 of the FCC Rules. Operation is subject to the following two conditions:

(1) this device may not cause harmful interference, and

(2) this device must accept any interference received, including interference that may cause undesired operation..

RF exposure warning :

This equipment complies with FCC radiation exposure limits set forth for an uncontrolled environment. This equipment shall be installed and operated with minimum distance 20cm between the radiator & body.

Antenna gain for buld-in Antenna: GSM850:1.44dBi; PCS1900: 1.19dBi; WCDMA850: 1.26dBi; WCDMA1900:1.17dBi

Antenna gain for external antenna: 2.0dBi.