SKY-T5/ PST01 Specifications

ProMOS's SKY-T5 is an automatic identification system, specifically designed for semiconductor-fab-level automated factories to identify information of any designated objects within the factories.

SKY-T5 offers excellent solutions for tracking, identifying, and managing all kinds of manufacturing carriers - SMIF pods (Standard Mechanical Interface Pod), FOUPs (Front-Opening-Unified-Pods), reticle boxes, and probe card cases - in the factories.

SKY-T5 comes equipped with NORDIC Multiprotocol Bluetooth Low Energy SoCs, Infrared receivers, E-INK e-paper, 3-Axis Accelerometer, etc, which, as a whole, make our product an groundbreaking automatic identification solution.

Our product makes dual communication protocol functions available: Infrared is compatible with Tag protocol and all series of Asyst ST-8200 readers while Bluetooth communicates with the low-power BLE 4.2 protocol.

All materials of the outer shells are made of industrial-grade, anti-static, acid and alkali resistant materials that comply with the requirements of different kinds of industrial manufacturing environments.

Front View

Back View

Side View

【Hardware Specifications】

1. Bluetooth 4.2 and Infrared and IR receiver and transmitter

- DC 3V dry cell battery
- NRF52832 BT4.2, supporting Bluetooth 5.0

2. High sensitivity IR receiver and highly efficient IR transmitter

3. Battery Consumption Sensor

4. **ARM-M4 MCU**
5. **1Mbit Flash**
6. **High sensitivity G-Sensor**
7. **High-definition 2.9" E-ink e-paper screen**

【Fields of Application】

1. **SKY-T5 is suitable for all kinds of manufacturing carriers, such as SMIF pods (Standard Mechanical Interface Pods), FOUPs (Front Opening Unified Pods), reticle boxes, and probe card cases.**
2. **Together with the SKY-T5 Infrared or Bluetooth readers installed on the load port of the equipment, our product will be able to communicate with factories' MES and EAP systems thereto forming a fully automated manufacturing environment.**

   - Readers within the load ports of the equipment receive and read the required information transmitted from SKY-T5 at carriers that hold the work-in-process products.
   - The EAP system will communicate with the MES system to locate applicable MES production procedures accordingly;
   - The EAP will verify and reconfirm all related information of the tools, materials and procedures being correct and then track-in to the MES system.
   - The EAP requires the equipment to follow the applicable MES production procedures starting production.
   - Once the production process is completed, the EAP will track-out from the MES System and transmit, through readers, all required information to SKY-T5.

3. **Automated Warehouse Management System**

   When the SKY-T5 Infrared or Bluetooth readers are installed onto the shelves of a warehouse, our products offer excellent automatic warehousing, locating and positioning solutions for the warehouse.

   - Automatic identification functions for warehouse management
   - Automatic identification functions for electronic shelving, racking and storage systems
   - Fully supports other automated production technologies, such as AMHS, OHT, AVG and cobot

4. **Any facility equipped with the Skypower Bridge environment will be able to work with SKY-T5 to efficiently perform regional locating and positioning, real-time tracking, and power consumption monitoring.**

- The SKY-T5, on any wearable device or object with the embedded Bluetooth device, will automatically broadcast and transmit required information.
- Once the Skypower Bridge receives the SKY-T5 broadcasting information, it will analyze the strength and contents of each signal and then transmit all information to the central database.
- Central system program will perform functions of locating, positioning, tracking, recording the location of SKY-T5, and managing the broadcast packet information.

5. **Customized Applications for Built-in 3-Axis Accelerometer**

- Abnormal Vibration Detection.

  Once the 3-Axis Accelerometer of the SKY-T5 detects any abnormal vibrations from any object, the SKY-T5 will instantly deliver the vibration related information to the central database system and will also simultaneously screen signals of all nearby Bluetooth devices, therefore transmitting all such nearby information to the central database system. This will allow the central system to calculate and trace all information relating to who, when, and where the records of such abnormal vibrations occur. This system works perfectly with Bluetooth ID Tag and wearable bands, and offers an excellent solution for abnormal vibration detection.

- Other Customized Applications can include, without limitation, monitoring production cycle, recording the total moving time of and designated objects.

【Product Features and Specifications】

1. **Outer Shell Specifications and Operating Environment Requirements**

- Dimension : Length : 118±2mm, Height : 77±2mm, Width : 25±2mm

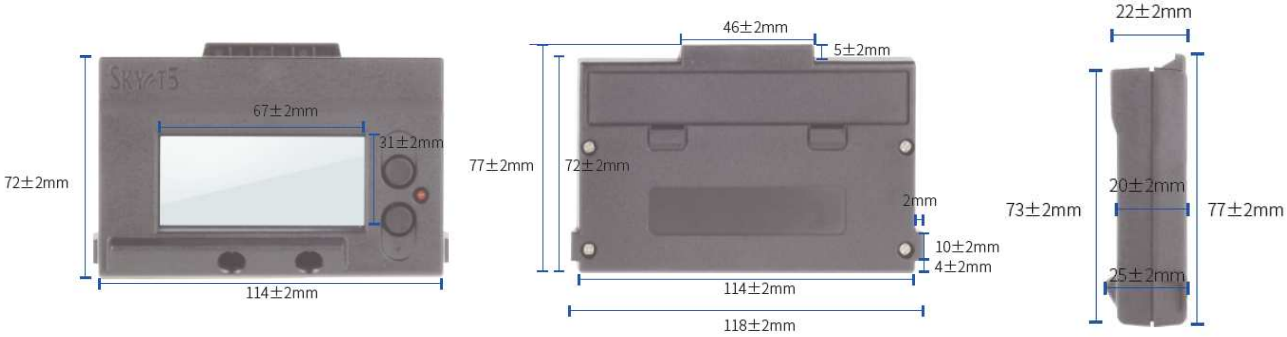

- 2. Weight : 103 grams (w/o battery)
- 3. Material : ABS resin (Acrylonitrile-Butadiene-Styrene terpolymer)
- 4. Power : DC 3.0 V (2 * 1.5 V dry cell batteries)
- 5. Operating Temperature : 0℃~40℃
- 6. Storage Temperature: -20℃~+70℃
- 7.Humidity : < 85% RH (at 40℃)
- 8. Power : DC 3.0V

2. Features of Bluetooth Devices

- Operating Frequency : 2.4GHz
- Maximum Data Rate: 1Mb/s
- Output Power : 0dBm
- Sensitivity:-95.7 dBm
- Operating Voltage : 2.2 V to 3.0 V
- RX Current : 9mA
- TX current : 9.6mA

ProMOS TECHNOLOGIES

【Federal Communication Commission Interference Statement】

This device complies with Part 15 of the FCC Rules. This operation is subject to the following two conditions: (1) This device may not cause harmful interference, and (2) this device must accept any interference received, including interference that may cause undesired operation.

This equipment has been tested and found to comply with the requirements for a Class B digital device, pursuant to Part 15 of the FCC Rules. These limits are designed to provide reasonable protection against harmful interference in a residential installation. This equipment generates, uses, and radiates radio frequency energy. Therefore, if not installed and used in accordance with the instructions, may cause harmful interference to radio communications. However, there is no guarantee that interference will not occur in a particular installation. If this equipment does cause harmful interference to radio or television reception, which can be determined by turning the equipment off and on, the user is encouraged to try to correct the interference by one of the following measures:

- Reorient or relocate the receiving antenna.
- Increase the separation between the equipment and receiver.
- Connect the equipment into an outlet on a circuit different from that to which the receiver is connected.
- Consult the dealer or an experienced radio/TV technician for help.

FCC Caution: Any changes or modifications not expressly approved by the party responsible for compliance could void the user's authority to operate this equipment.

This transmitter must not be co-located or operating in conjunction with any other antenna or transmitter.

【Radiation Exposure Statement:】

This equipment complies with FCC radiation exposure limits set forth for an uncontrolled environment. This equipment should be installed and operated with minimum distance 20cm between the radiator & your body.