Test Report

Report No.	:	**MTi260608023-0102E1**
Date of issue	:	**2026-08-11**
Applicant	:	**Encased Products Inc**
Product	:	**QI2.2 25W Magnetic Wireless Charger**
Model(s)	:	**MSCP29, MSCP2864, MSCP07CK, MSCP202, MSCP2862, MSCP2952, MSCP2860, MSCP2861, MSCP11CK, SCPGM62, MSCP30, MSCP103**
FCC ID	:	**2AR4R-MSCP29**

Shenzhen Microtest Co., Ltd.

TEST REPORT

Report No.: MTi260608023-0102E1

Table of contents

1 General Description 4

1.1 Description of the EUT 4

1.2 Description of test modes 4

1.3 Environmental Conditions 5

1.4 Description of support units 5

1.5 Measurement uncertainty 5

2 Summary of Test Result 6

3 Test Facilities and accreditations 7

3.1 Test laboratory 7

4 List of test equipment 8

5 Evaluation Results (Evaluation) 10

5.1 Antenna requirement 10

6 Radio Spectrum Matter Test Results (RF) 11

6.1 Conducted Emission at AC power line 11

6.2 20dB Occupied Bandwidth 14

6.3 Emissions in frequency bands (below 30MHz) 18

6.4 Emissions in frequency bands (30MHz - 1GHz) 24

Photographs of the test setup 28

Photographs of the EUT 29

TEST REPORT

Report No.: MTi260608023-0102E1

Test Result Certification	
Applicant	Encased Products Inc
Applicant Address	282 DuPont Ave, Newburgh, New York, United States
Manufacturer	Encased Products Inc
Manufacturer Address	282 DuPont Ave, Newburgh, New York, United States
Factory	Encased Products Inc
Factory Address	282 DuPont Ave, Newburgh, New York, United States
Product description	
Product name	QI2.2 25W Magnetic Wireless Charger
Trademark	Galvanox
Model name	MSCP29
Series Model(s)	MSCP2864, MSCP07CK, MSCP202, MSCP2862, MSCP2952, MSCP2860, MSCP2861, MSCP11CK, SCPGM62, MSCP30, MSCP103
Standards	47 CFR Part 15C
Test Method	ANSI C63.10-2020 + Cor. 1-2023+C63.10a-2024 + Errata to C63.10a-2024
Testing Information	
Date of test	2026-06-29 to 2026-08-10
Test result	Pass

Prepared by:	James Qin	James Qin
Reviewed by:	David Lee	David. Lee
Approved by:	Lewis Lian	Lewis Lian

1 General Description

1.1 Description of the EUT

Product name:	QI2.2 25W Magnetic Wireless Charger
Model name:	MSCP29
Series Model(s):	MSCP2864, MSCP07CK, MSCP202, MSCP2862, MSCP2952, MSCP2860, MSCP2861, MSCP11CK, SCPGM62, MSCP30, MSCP103
Model difference:	All the models are the same circuit and module, except the model name.
Electrical rating:	Input: DC 9V/ 3A, 12V/ 2A PPS: 3.3-20V/ 2A Output: 25W(Max)
Accessories:	N/A
Hardware version:	V0.1
Software version:	V1.0
Test sample(s) number:	MTi260608023-01-R001
RF specification	
Operating frequency range:	115-205kHz(5W/ 7.5W/ 10W/ 15W EPP) 360kHz(15W MPP/ 25W MPP)
Modulation type:	ASK
Antenna(s) type:	Coil

1.2 Description of test modes

No.	Emission test modes
Mode1	Wireless Output(5W)
Mode2	Wireless Output(7.5W)
Mode3	Wireless Output(10W)
Mode4	Wireless Output(15W EPP)
Mode5	Wireless Output(15W MPP)
Mode6	Wireless Output(25W MPP)
Mode7	Stand by

1.3 Environmental Conditions

During the measurement the environmental conditions were within the listed ranges:

Temperature:	15°C ~ 35°C
Humidity:	20% RH ~ 75% RH
Atmospheric pressure:	98 kPa ~ 101 kPa

1.4 Description of support units

The EUT has been tested as an independent unit together with other necessary accessories or support units. The following support units or accessories were used to form a representative test configuration during the tests.

Support equipment list			
Description	Model	Serial No.	Manufacturer
HUAWEI QUICK CHARGE	HW-200200ZP1	JN67LSN7N03451	HUAWEI
wireless charging load	YBZ3.0	/	YBZ
wireless charging load	YBZ2.1	/	YBZ
Support cable list			
Description	Length (m)	From	To
/	/	/	/

1.5 Measurement uncertainty

Measurement	Uncertainty
Conducted emissions (AMN 150kHz~30MHz)	±3.1dB
Occupied channel bandwidth	±3 %
Radiated spurious emissions (9kHz~30MHz)	±4.3dB
Radiated spurious emissions (30MHz~1GHz)	±4.7dB
Temperature	±1 °C
Humidity	± 5 %

This uncertainty represents an expanded uncertainty expressed at approximately the 95% confidence level using a coverage factor of k=2.

2 Summary of Test Result

No.	Item	Standard	Requirement	Result
1	Antenna requirement	47 CFR Part 15C	47 CFR Part 15.203	Pass
2	Conducted Emission at AC power line	47 CFR Part 15C	47 CFR Part 15.207(a)	Pass
3	20dB Occupied Bandwidth	47 CFR Part 15C	47 CFR Part 15.215(c)	Pass
4	Emissions in frequency bands (below 30MHz)	47 CFR Part 15C	47 CFR Part 15.209	Pass
5	Emissions in frequency bands (30MHz - 1GHz)	47 CFR Part 15C	47 CFR Part 15.209	Pass

3 Test Facilities and accreditations

3.1 Test laboratory

Test laboratory:	Shenzhen Microtest Co., Ltd.
Test site location:	101, No.7, Zone 2, Xinxing Industrial Park, Fuhai Avenue, Xinhe Community, Fuhai Street, Bao'an District, Shenzhen, Guangdong, China
Telephone:	(86-755)88850135
Fax:	(86-755)88850136
CNAS Registration No.:	CNAS L5868
FCC Registration No.:	448573
IC Registration No.:	21760
CABID:	CN0093

4 List of test equipment

No.	Equipment	Manufacturer	Model	Serial No.	Cal. date	Cal. Due
Conducted Emission at AC power line						
1	EMI Test Receiver	Rohde&schwarz	ESCI3	101368	2026-03-10	2027-03-09
2	Artificial mains network	Schwarzbeck	NSLK 8127	183	2026-03-11	2027-03-10
3	Artificial Mains Network	Rohde & Schwarz	ESH2-Z5	100263	2026-03-10	2027-03-09
4	EMI Test Software	Farad	EZ-EMC	Ver. EMEC-3A1	/	/
20dB Occupied Bandwidth						
1	Wideband Radio Communication Tester	Rohde&schwarz	CMW500	149155	2026-03-09	2027-03-08
2	ESG Series Analog Ssignal Generator	Agilent	E4421B	GB40051240	2026-03-09	2027-03-08
3	PXA Signal Analyzer	Agilent	N9030A	MY51350296	2026-03-10	2027-03-09
4	Synthesized Sweeper	Agilent	83752A	3610A01957	2026-03-10	2027-03-09
5	MXA Signal Analyzer	Agilent	N9020A	MY50143483	2026-03-09	2027-03-08
6	RF Control Unit	Tonscend	JS0806-1	19D8060152	2026-03-11	2027-03-10
7	Band Reject Filter Group	Tonscend	JS0806-F	19D8060160	2026-03-11	2027-03-10
8	ESG Vector Signal Generator	Agilent	N5182A	MY50143762	2026-03-10	2027-03-09
9	DC Power Supply	Agilent	E3632A	MY40027695	2026-03-09	2027-03-08
10	RF Test System	Tonscend	JS1120-3 Test System	V3.6.21	/	/
Emissions in frequency bands (below 30MHz)						
1	EMI Test Receiver	Rohde&schwarz	ESCI7	101166	2026-03-10	2027-03-09
2	Active Loop Antenna	Schwarzbeck	FMZB 1519 B	00066	2026-03-08	2028-03-07
3	Amplifier	Hewlett-Packard	8447F	3113A06184	2026-03-10	2027-03-09
4	EMI Test Software	Farad	EZ-EMC	Ver. EMEC-3A1	/	/
Emissions in frequency bands (30MHz - 1GHz)						
1	EMI Test Receiver	Rohde&schwarz	ESCI7	101166	2026-03-10	2027-03-09
2	TRILOG Broadband Antenna	schwarabeck	VULB 9163	9163-1338	2025-05-23	2027-05-22
3	Active Loop Antenna	Schwarzbeck	FMZB 1519 B	00066	2026-03-08	2028-03-07

TEST REPORT

Report No.: MTi260608023-0102E1

No.	Equipment	Manufacturer	Model	Serial No.	Cal. date	Cal. Due
4	Amplifier	Hewlett-Packard	8447F	3113A06184	2026-03-10	2027-03-09
5	EMI Test Software	Farad	EZ-EMC	Ver. EMEC-3A1	/	/

5 Evaluation Results (Evaluation)

5.1 Antenna requirement

Test Requirement:	Refer to 47 CFR Part 15.203, an intentional radiator shall be designed to ensure that no antenna other than that furnished by the responsible party shall be used with the device. The use of a permanently attached antenna or of an antenna that uses a unique coupling to the intentional radiator shall be considered sufficient to comply with the provisions of this section.

5.1.1 Conclusion:

The antenna of the EUT is permanently attached. The EUT complies with the requirement of FCC PART 15.203.

6 Radio Spectrum Matter Test Results (RF)

6.1 Conducted Emission at AC power line

Test Requirement:	Except as shown in paragraphs (b)and (c)of this section, for an intentional radiator that is designed to be connected to the public utility (AC) power line, the radio frequency voltage that is conducted back onto the AC power line on any frequency or frequencies, within the band 150 kHz to 30 MHz, shall not exceed the limits in the following table, as measured using a 50 μH/50 ohms line impedance stabilization network (LISN).
Test Limit:	

Frequency of emission (MHz)	Conducted limit (dBμV)	
	Quasi-peak	Average
0.15-0.5	66 to 56*	56 to 46*
0.5-5	56	46
5-30	60	50

*Decreases with the logarithm of the frequency.

Test Method:	ANSI C63.10-2020 + Cor. 1-2023+C63.10a-2024 + Errata to C63.10a-2024 section 6.2
Procedure:	Refer to ANSI C63.10-2020 + Cor. 1-2023+C63.10a-2024 + Errata to C63.10a-2024 section 6.2, standard test method for ac power-line conducted emissions from unlicensed wireless devices

6.1.1 E.U.T. Operation:

Operating Environment:					
Temperature:	24 °C	Humidity:	65 %	Atmospheric Pressure:	101 kPa
Pre test mode:	Mode1, Mode2, Mode3, Mode4, Mode5, Mode6, Mode7				
Final test mode:	All of the listed pre-test mode were tested, only the data of the worst mode (Mode6) is recorded in the report				

6.1.2 Test Setup Diagram:

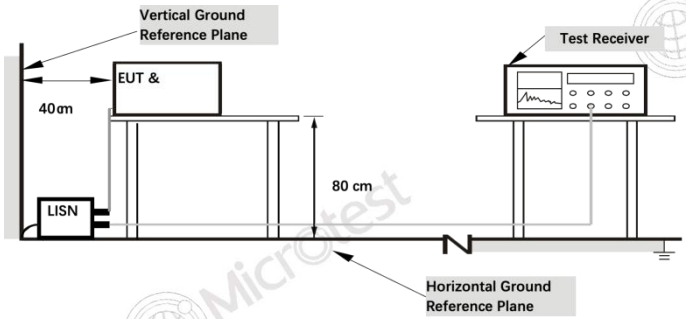

6.1.3 Test Data:

Calculation formula:

Measurement (dBμV) = Reading Level (dBμV) + Correct Factor (dB)
Correct Factor (dB)= LISN Factor + Cable Loss + Pulse Limiter Factor
Over (dB) = Measurement (dBμV) – Limit (dBμV)

Mode6 / Line: Line

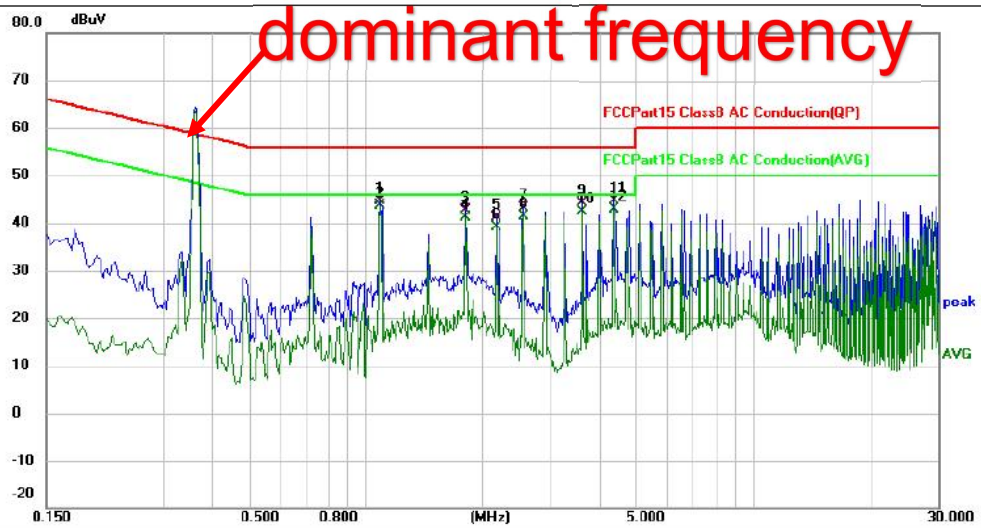

No.	Mk.	Freq.	Reading Level	Correct Factor	Measure-ment	Limit	Over		
		MHz	dBuV	dB	dBuV	dBuV	dB	Detector	Comment
1		1.0900	33.89	10.64	44.53	56.00	-11.47	QP	
2	*	1.0900	32.94	10.64	43.58	46.00	-2.42	AVG	
3		1.8140	32.00	10.73	42.73	56.00	-13.27	QP	
4		1.8140	30.41	10.73	41.14	46.00	-4.86	AVG	
5		2.1780	30.46	10.75	41.21	56.00	-14.79	QP	
6		2.1780	28.46	10.75	39.21	46.00	-6.79	AVG	
7		2.5420	32.49	10.76	43.25	56.00	-12.75	QP	
8		2.5420	30.69	10.76	41.45	46.00	-4.55	AVG	
9		3.6300	33.26	10.77	44.03	56.00	-11.97	QP	
10		3.6300	31.62	10.77	42.39	46.00	-3.61	AVG	
11		4.3580	33.78	10.78	44.56	56.00	-11.44	QP	
12		4.3580	32.13	10.78	42.91	46.00	-3.09	AVG	

Mode6 / Line: Neutral

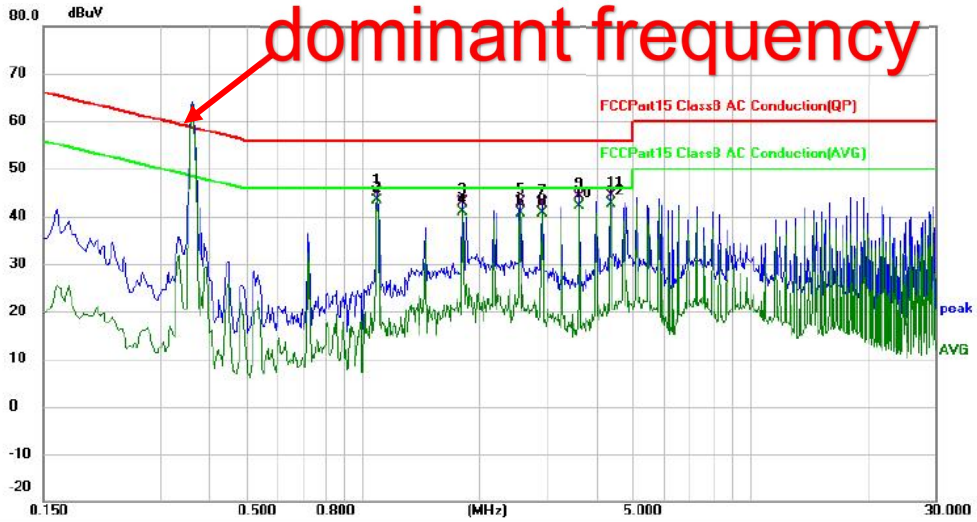

No.	Mk.	Freq.	Reading Level	Correct Factor	Measure-ment	Limit	Over		
		MHz	dBuV	dB	dBuV	dBuV	dB	Detector	Comment
1		1.0900	34.11	10.65	44.76	56.00	-11.24	QP	
2	*	1.0900	32.68	10.65	43.33	46.00	-2.67	AVG	
3		1.8140	32.16	10.74	42.90	56.00	-13.10	QP	
4		1.8140	30.08	10.74	40.82	46.00	-5.18	AVG	
5		2.5420	32.14	10.77	42.91	56.00	-13.09	QP	
6		2.5420	29.81	10.77	40.58	46.00	-5.42	AVG	
7		2.9060	31.83	10.78	42.61	56.00	-13.39	QP	
8		2.9060	29.78	10.78	40.56	46.00	-5.44	AVG	
9		3.6300	33.24	10.78	44.02	56.00	-11.98	QP	
10		3.6300	31.35	10.78	42.13	46.00	-3.87	AVG	
11		4.3580	33.62	10.79	44.41	56.00	-11.59	QP	
12		4.3580	31.84	10.79	42.63	46.00	-3.37	AVG	

6.2 20dB Occupied Bandwidth

Test Requirement:	47 CFR Part 15.215(c)
Test Limit:	Refer to 47 CFR 15.215(c), intentional radiators operating under the alternative provisions to the general emission limits, as contained in §§ 15.217 through 15.257 and in subpart E of this part, must be designed to ensure that the 20 dB bandwidth of the emission, or whatever bandwidth may otherwise be specified in the specific rule section under which the equipment operates, is contained within the frequency band designated in the rule section under which the equipment is operated.
Test Method:	ANSI C63.10-2020 + Cor. 1-2023+C63.10a-2024 + Errata to C63.10a-2024, section 6.9.2
Procedure:	a) The spectrum analyzer center frequency is set to the nominal EUT channel center frequency. The span range for the EMI receiver or spectrum analyzer shall be between two times and five times the OBW. b) The nominal IF filter bandwidth (3 dB RBW) shall be in the range of 1% to 5% of the OBW and video bandwidth (VBW) shall be approximately three times RBW, unless otherwise specified by the applicable requirement. c) Set the reference level of the instrument as required, keeping the signal from exceeding the maximum input mixer level for linear operation. In general, the peak of the spectral envelope shall be more than [10 log (OBW/RBW)] below the reference level. Specific guidance is given in 4.1.5.2. d) Steps a) through c) might require iteration to adjust within the specified tolerances. e) The dynamic range of the instrument at the selected RBW shall be more than 10 dB below the target "−xx dB down" requirement; that is, if the requirement calls for measuring the −20 dB OBW, the instrument noise floor at the selected RBW shall be at least 30 dB below the reference value. f) Set detection mode to peak and trace mode to max hold. g) Determine the reference value: Set the EUT to transmit an unmodulated carrier or modulated signal, as applicable. Allow the trace to stabilize. Set the spectrum analyzer marker to the highest level of the displayed trace (this is the reference value). h) Determine the "−xx dB down amplitude" using [(reference value) − xx]. Alternatively, this calculation may be made by using the marker-delta function of the instrument. i) If the reference value is determined by an unmodulated carrier, then turn the EUT modulation ON, and either clear the existing trace or start a new trace on the spectrum analyzer and allow the new trace to stabilize. Otherwise, the trace from step g) shall be used for step j). j) Place two markers, one at the lowest frequency and the other at the highest frequency of the envelope of the spectral display, such that each marker is at or slightly below the "-xx dB down amplitude" determined in step h). If a marker is below this "−xx dB down amplitude" value, then it shall be as close as possible to this value. The occupied bandwidth is the frequency difference between the two markers. Alternatively, set a marker at the lowest frequency of the envelope of the spectral display, such that the marker is at or slightly below the "-xx dB down amplitude" determined in step h). Reset the marker-delta function and move the marker to the other side of the emission until the delta marker amplitude is at the same level as the reference marker amplitude. The marker-delta frequency reading at this point is the specified emission bandwidth.

	k) The occupied bandwidth shall be reported by providing plot(s) of the measuring instrument display; the plot axes and the scale units per division shall be clearly labeled. Tabular data may be reported in addition to the plot(s).

6.2.1 E.U.T. Operation:

Operating Environment:					
Temperature:	23.5 °C	Humidity:	45.2 %	Atmospheric Pressure:	101 kPa
Pre test mode:	Mode1, Mode2, Mode3, Mode4, Mode5, Mode6, Mode7				
Final test mode:	All of the listed pre-test mode were tested, only the data of the worst mode (Mode4, Mode6) is recorded in the report				

6.2.2 Test Setup Diagram:

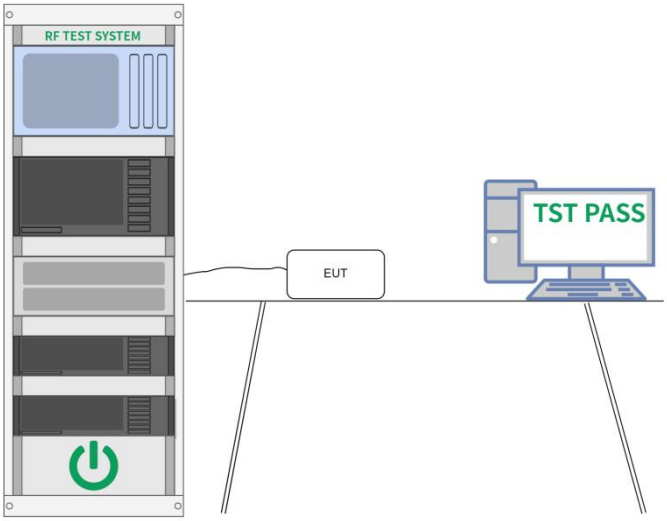

6.2.3 Test Data:

Note: Because the measured signal is CW-like, adjusting the RBW per C63.10 would not be practical since measurement bandwidth will always follow the RBW. The RBW is set to 300 Hz to perform the occupied bandwidth test.

Mode6

Frequency kHz	20 dB occupied bandwidth Hz	99% occupied bandwidth Hz
360	834	741

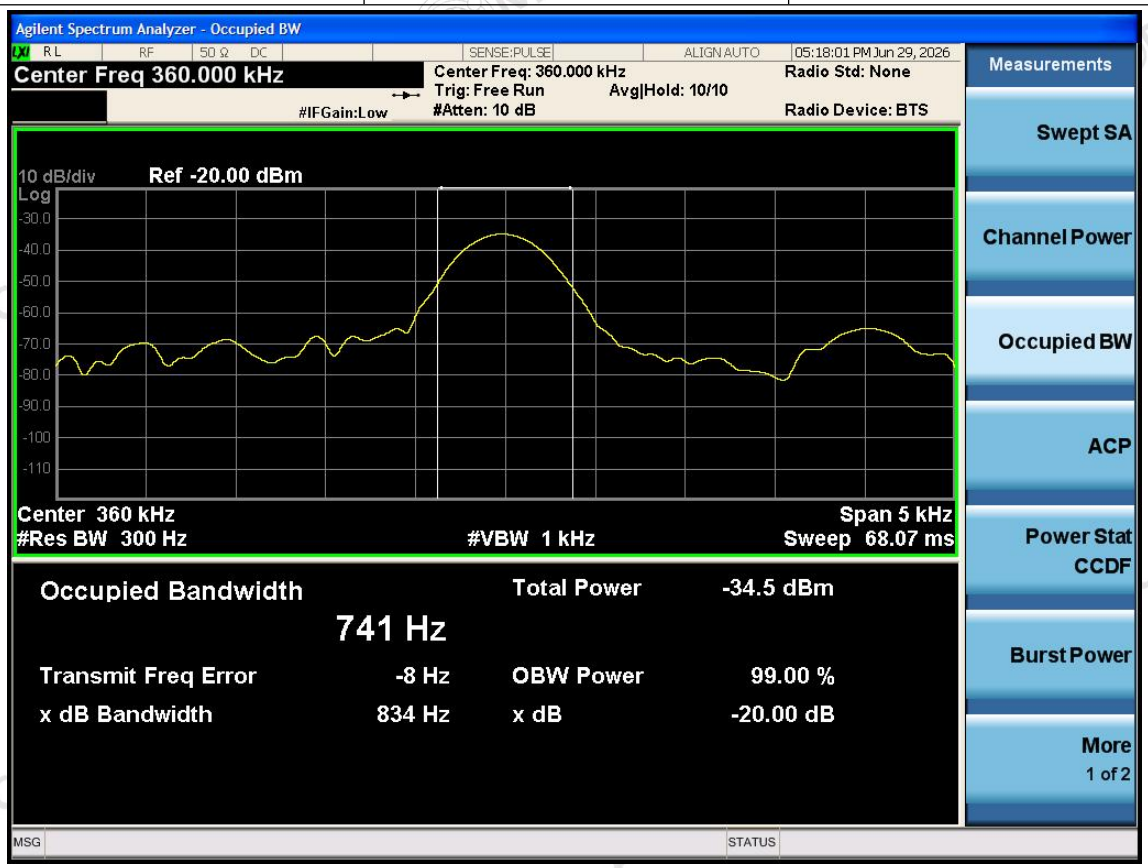

TEST REPORT

Report No.: MTi260608023-0102E1

Note: Because the measured signal is CW-like, adjusting the RBW per C63.10 would not be practical since measurement bandwidth will always follow the RBW. The RBW is set to 300 Hz to perform the occupied bandwidth test.

Mode4

Frequency kHz	20 dB occupied bandwidth Hz	99% occupied bandwidth Hz
128.790	813	704

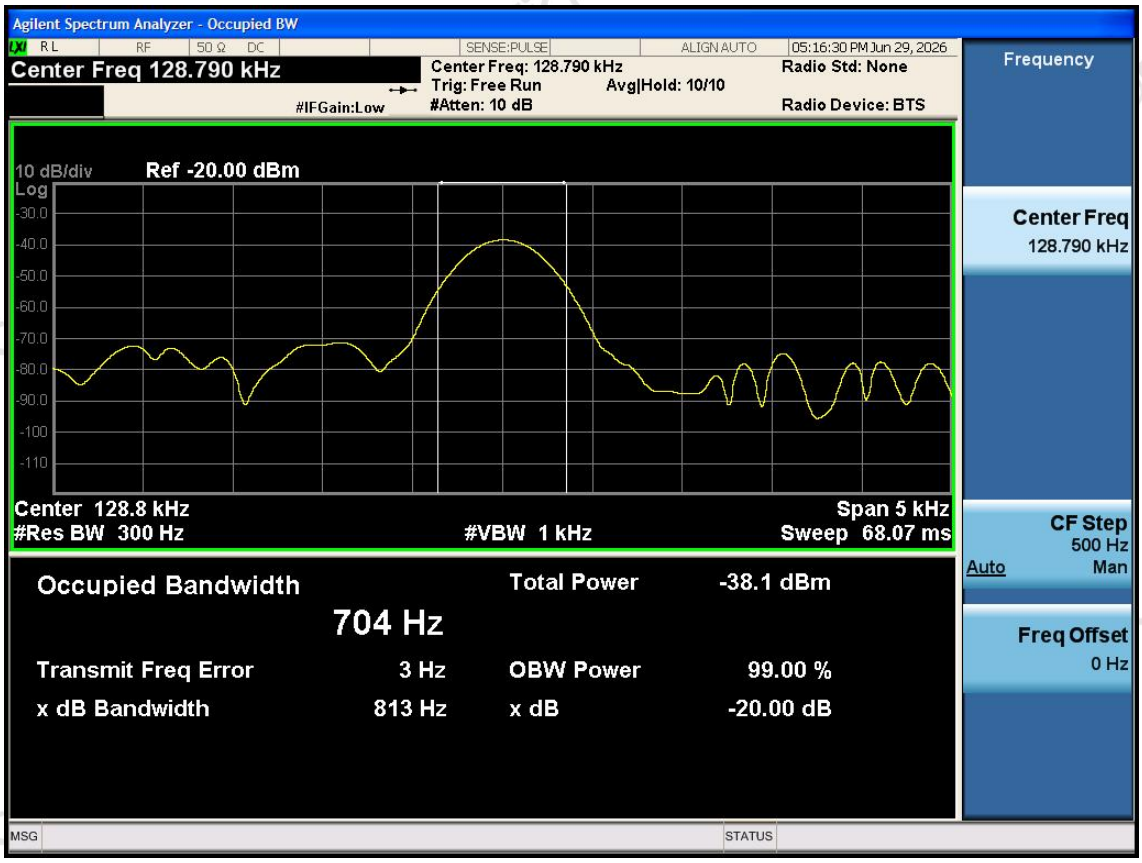

6.3 Emissions in frequency bands (below 30MHz)

Test Requirement:	47 CFR Part 15.209
Test Limit:	

Frequency (MHz)	Field strength (microvolts/meter)	Measurement distance (meters)
0.009-0.490	2400/F(kHz)	300
0.490-1.705	24000/F(kHz)	30
1.705-30.0	30	30
30-88	100 **	3
88-216	150 **	3
216-960	200 **	3
Above 960	500	3

** Except as provided in paragraph (g), fundamental emissions from intentional radiators operating under this section shall not be located in the frequency bands 54-72 MHz, 76-88 MHz, 174-216 MHz or 470-806 MHz. However, operation within these frequency bands is permitted under other sections of this part, e.g., §§ 15.231 and 15.241.
In the emission table above, the tighter limit applies at the band edges.
The emission limits shown in the above table are based on measurements employing a CISPR quasi-peak detector except for the frequency bands 9–90 kHz, 110–490 kHz and above 1000 MHz. Radiated emission limits in these three bands are based on measurements employing an average detector.
As shown in § 15.35(b), for frequencies above 1000 MHz, the field strength limits in paragraphs (a)and (b)of this section are based on average limits. However, the peak field strength of any emission shall not exceed the maximum permitted average limits specified above by more than 20 dB under any condition of modulation. For point-to-point operation under paragraph (b)of this section, the peak field strength shall not exceed 2500 millivolts/meter at 3 meters along the antenna azimuth.

Test Method:	ANSI C63.10-2020 + Cor. 1-2023+C63.10a-2024 + Errata to C63.10a-2024 section 6.4
Procedure:	ANSI C63.10-2020 + Cor. 1-2023+C63.10a-2024 + Errata to C63.10a-2024 section 6.4

6.3.1 E.U.T. Operation:

Operating Environment:					
Temperature:	25 °C	Humidity:	61 %	Atmospheric Pressure:	101 kPa
Pre test mode:	Mode1, Mode2, Mode3, Mode4, Mode5, Mode6, Mode7				
Final test mode:	All of the listed pre-test mode were tested, only the data of the worst mode (Mode4, Mode6) is recorded in the report				

6.3.2 Test Setup Diagram:

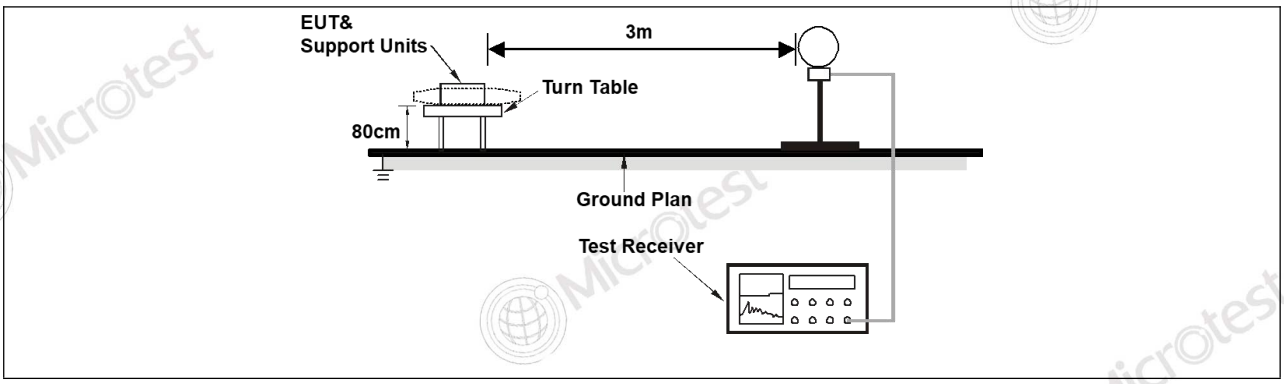

6.3.3 Test Data:

Calculation formula:

For 9 kHz – 150kHz:

Measurement (dBμV/m) = Reading Level (dBμV) + Correct Factor (dB)
Correct Factor (dB)=Antenna Factor+ Cable Loss- Preamplifier Factor
Over (dB) = Measurement (dBμV/m) – Limit (dBμV/m)

For 150kHz – 30MHz:

Measurement (dBμV/m) = Reading Level (dBμV) + Correct Factor (dB)
Correct Factor (dB)=Antenna Factor+ Cable Loss- Preamplifier Factor
Over (dB) = Measurement (dBμV/m) – Limit (dBμV/m)

Mode4 / Polarization: Coaxial

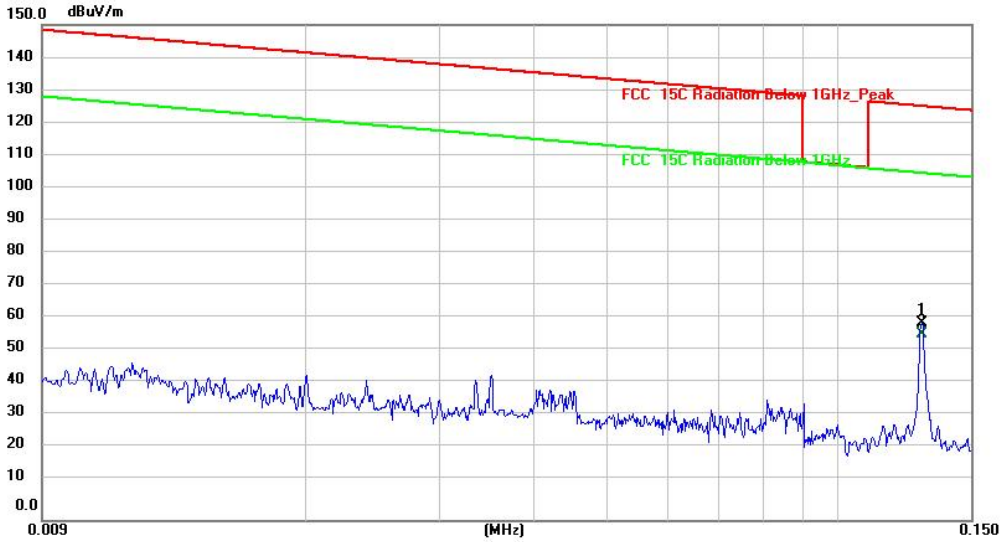

No.	Mk.	Freq.	Reading Level	Correct Factor	Measure-ment	Limit	Over		
		MHz	dBuV	dB	dBuV/m	dBuV/m	dB	Detector	Comment
1		0.1292	40.54	19.14	59.68	125.40	-65.72	peak	
2	*	0.1292	37.22	19.14	56.36	105.40	-49.04	AVG	

Mode4 / Polarization: Coaxial

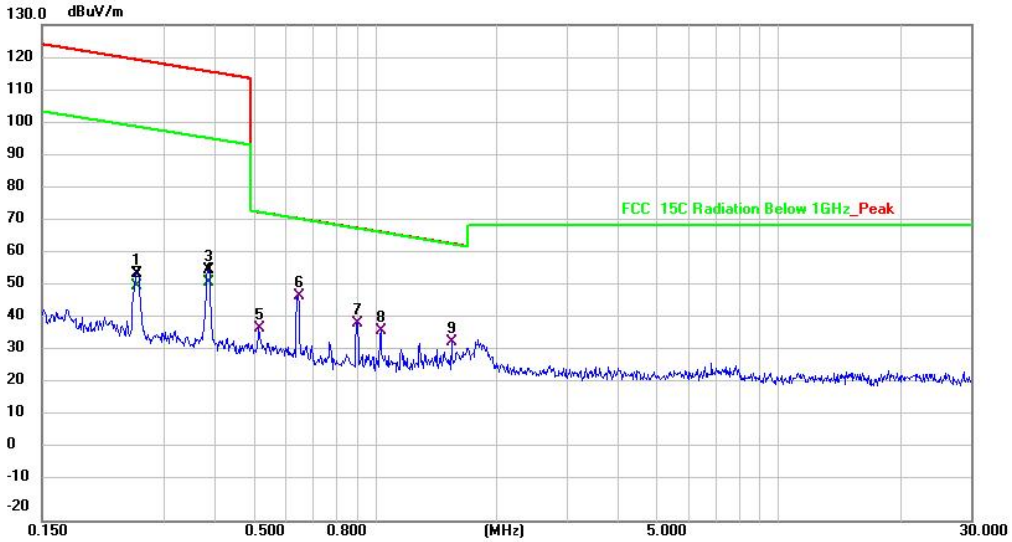

No.	Mk.	Freq.	Reading Level	Correct Factor	Measure-ment	Limit	Over		
		MHz	dBuV	dB	dBuV/m	dBuV/m	dB	Detector	Comment
1		0.2575	35.36	19.46	54.82	119.40	-64.58	peak	
2		0.2575	31.77	19.46	51.23	99.40	-48.17	AVG	
3		0.3852	36.22	19.77	55.99	115.89	-59.90	peak	
4		0.3852	32.55	19.77	52.32	95.89	-43.57	AVG	
5		0.5155	18.06	20.26	38.32	73.36	-35.04	QP	
6	*	0.6440	27.60	20.58	48.18	71.43	-23.25	QP	
7		0.9039	19.06	20.91	39.97	68.50	-28.53	QP	
8		1.0320	16.34	21.36	37.70	67.35	-29.65	QP	
9		1.5436	11.81	22.43	34.24	63.86	-29.62	QP	

Mode6 / Polarization: Coaxial

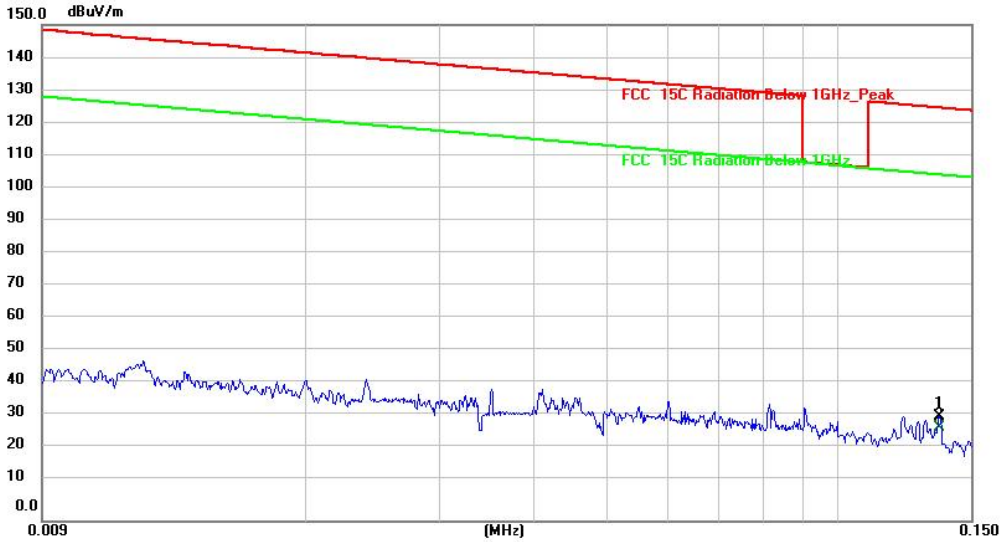

No.	Mk.	Freq.	Reading Level	Correct Factor	Measure-ment	Limit	Over		
		MHz	dBuV	dB	dBuV/m	dBuV/m	dB	Detector	Comment
1		0.1363	12.87	18.93	31.80	124.93	-93.13	peak	
2	*	0.1363	9.43	18.93	28.36	104.93	-76.57	AVG	

Mode6 / Polarization: Coaxial

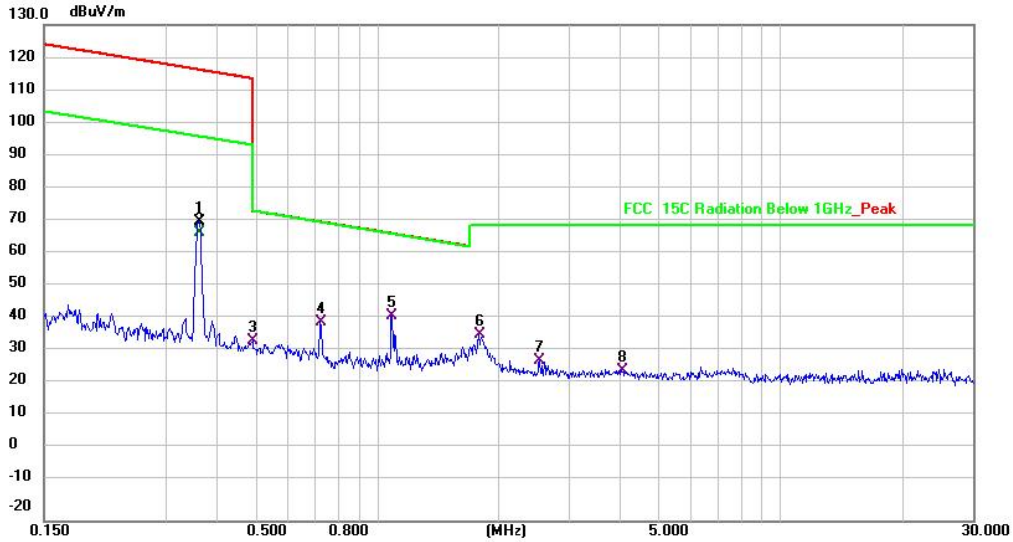

No.	Mk.	Freq.	Reading Level	Correct Factor	Measure-ment	Limit	Over		
		MHz	dBuV	dB	dBuV/m	dBuV/m	dB	Detector	Comment
1		0.3615	51.04	19.68	70.72	116.45	-45.73	peak	
2		0.3615	47.57	19.68	67.25	96.45	-29.20	AVG	
3		0.4915	14.38	20.16	34.54	73.77	-39.23	QP	
4		0.7236	19.71	20.62	40.33	70.42	-30.09	QP	
5	*	1.0881	20.46	21.49	41.95	66.89	-24.94	QP	
6		1.7810	13.59	22.94	36.53	69.50	-32.97	QP	
7		2.5400	4.33	24.27	28.60	69.50	-40.90	QP	
8		4.0489	6.64	19.09	25.73	69.50	-43.77	QP	

6.4 Emissions in frequency bands (30MHz - 1GHz)

Test Requirement:	47 CFR Part 15.209
Test Limit:	

Frequency (MHz)	Field strength (microvolts/meter)	Measurement distance (meters)
0.009-0.490	2400/F(kHz)	300
0.490-1.705	24000/F(kHz)	30
1.705-30.0	30	30
30-88	100 **	3
88-216	150 **	3
216-960	200 **	3
Above 960	500	3

** Except as provided in paragraph (g), fundamental emissions from intentional radiators operating under this section shall not be located in the frequency bands 54-72 MHz, 76-88 MHz, 174-216 MHz or 470-806 MHz. However, operation within these frequency bands is permitted under other sections of this part, e.g., §§ 15.231 and 15.241.
In the emission table above, the tighter limit applies at the band edges.
The emission limits shown in the above table are based on measurements employing a CISPR quasi-peak detector except for the frequency bands 9–90 kHz, 110–490 kHz and above 1000 MHz. Radiated emission limits in these three bands are based on measurements employing an average detector.
As shown in § 15.35(b), for frequencies above 1000 MHz, the field strength limits in paragraphs (a)and (b)of this section are based on average limits. However, the peak field strength of any emission shall not exceed the maximum permitted average limits specified above by more than 20 dB under any condition of modulation. For point-to-point operation under paragraph (b)of this section, the peak field strength shall not exceed 2500 millivolts/meter at 3 meters along the antenna azimuth.

Test Method:	ANSI C63.10-2020 + Cor. 1-2023+C63.10a-2024 + Errata to C63.10a-2024 section 6.5
Procedure:	ANSI C63.10-2020 + Cor. 1-2023+C63.10a-2024 + Errata to C63.10a-2024 section 6.5

6.4.1 E.U.T. Operation:

Operating Environment:					
Temperature:	25 °C	Humidity:	61 %	Atmospheric Pressure:	101 kPa
Pre test mode:	Mode1, Mode2, Mode3, Mode4, Mode5, Mode6, Mode7				
Final test mode:	All of the listed pre-test mode were tested, only the data of the worst mode (Mode6) is recorded in the report				

6.4.2 Test Setup Diagram:

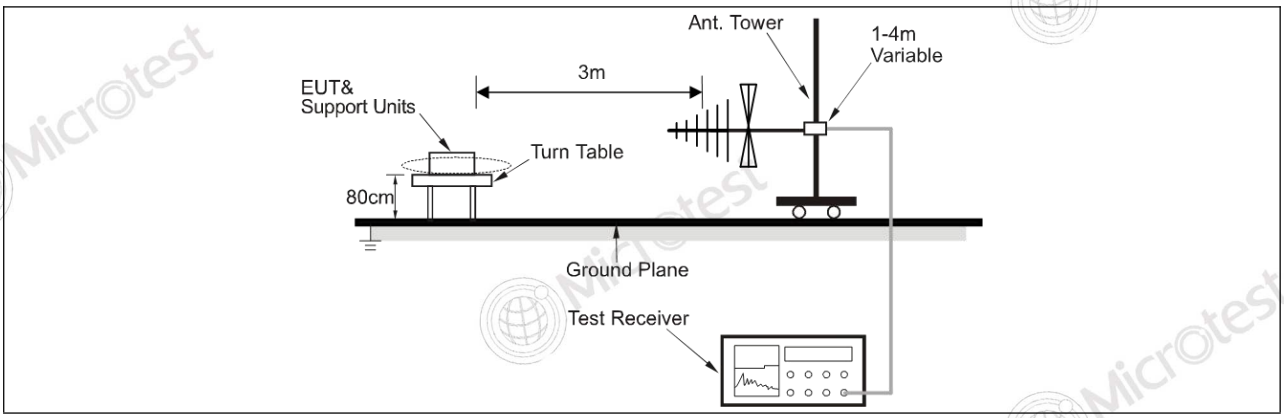

6.4.3 Test Data:

Calculation formula:

For 30 MHz – 1000 MHz:

Measurement (dBμV/m) = Reading Level (dBμV) + Correct Factor (dB)
Correct Factor (dB)=Antenna Factor+ Cable Loss- Preamplifier Factor
Over (dB) = Measurement (dBμV/m) – Limit (dBμV/m)

Mode6 / Polarization: Horizontal

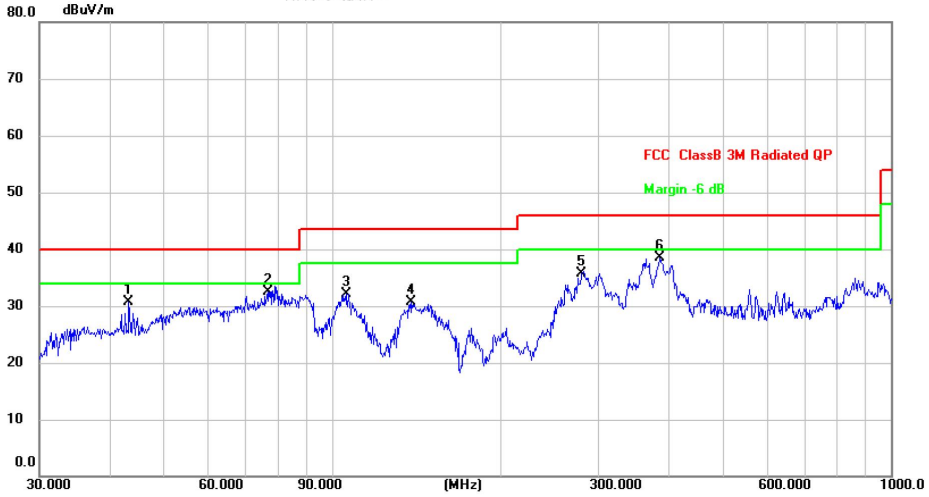

No.	Mk.	Freq.	Reading Level	Correct Factor	Measure-ment	Limit	Over		
		MHz	dBuV	dB	dBuV/m	dBuV/m	dB	Detector	Comment
1		43.3534	39.57	-8.87	30.70	40.00	-9.30	QP	
2		76.7807	45.90	-13.48	32.42	40.00	-7.58	QP	
3		106.3850	40.65	-8.58	32.07	43.50	-11.43	QP	
4		138.8734	43.70	-13.09	30.61	43.50	-12.89	QP	
5		280.0237	43.03	-7.42	35.61	46.00	-10.39	QP	
6	*	386.6338	42.08	-3.63	38.45	46.00	-7.55	QP	

Mode6 / Polarization: Vertical

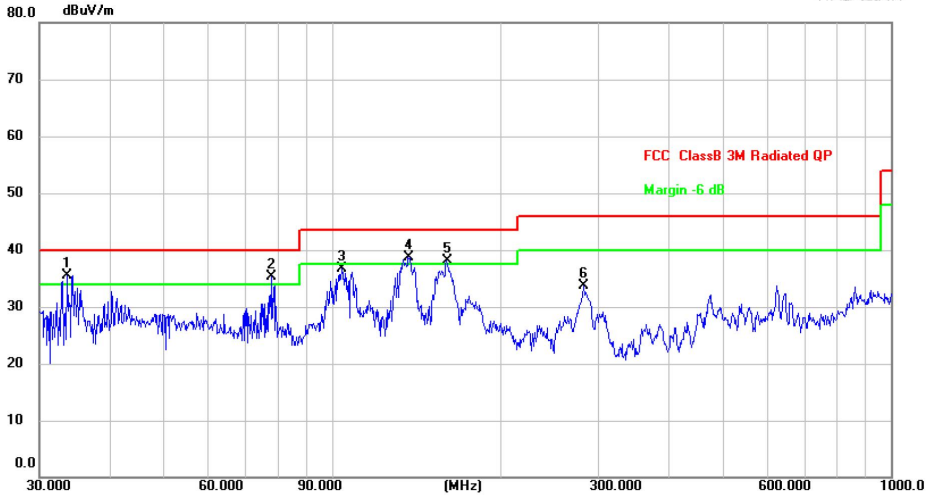

No.	Mk.	Freq.	Reading Level	Correct Factor	Measure-ment	Limit	Over		
		MHz	dBuV	dB	dBuV/m	dBuV/m	dB	Detector	Comment
1	*	33.5623	46.08	-10.57	35.51	40.00	-4.49	QP	
2	!	78.1388	49.01	-13.66	35.35	40.00	-4.65	QP	
3		104.1701	45.27	-8.62	36.65	43.50	-6.85	QP	
4	!	136.9390	51.41	-12.73	38.68	43.50	-4.82	QP	
5	!	160.3455	50.15	-12.10	38.05	43.50	-5.45	QP	
6		281.9945	41.11	-7.45	33.66	46.00	-12.34	QP	

Photographs of the test setup

Refer to Appendix - Test Setup Photos

Photographs of the EUT

Refer to Appendix - EUT Photos

Statement

1. This report is invalid without the seal and signature of the laboratory.

2. The test results of this report are only responsible for the samples submitted.Client shall be responsible for representativeness of the sample and authenticity of the material.
3. The report shall not be partially reproduced without the written consent of the Laboratory.
4. This report is invalid if transferred, altered or tampered with in any form without authorization.
5. The observations or tests with special mark fall outside the scope of accreditation, and are only used for purpose of commission, research, training, internal quality control etc.
6. Any objection to this report shall be submitted to the laboratory within 15 days from the date of receipt of the report.

****** END OF REPORT ******