10.1" 2-in-1 Laptop/Tablet with Detachable Keyboard

MODEL NO.: NOQB5, NOXQI

picture for reference only.

USER MANUAL

Please read this manual carefully before using.
and keep it for future reference.

Features

Browse the Web.
Visit your favorite websites

Check your e-mail
Keep in touch with friends and family

Watch YouTube™ videos
Browse the world's most popular video-sharing community

Read your favorite books
Download thousands of books .

Discover many Windows app

Connect to the Internet wirelessly
High-speed Wi-Fi 802.11 b/g/n networking

Enjoy your media library anywhere
Portable powerhouse plays popular music, video, and photo formats

Memory card increases your storage capacity (up to 32 GB supported)

Built-in camera
Convenient front-facing and rear camera

Automatic orientation detection
Read any way you want; the display adjusts automatically!

Unit at a Glance

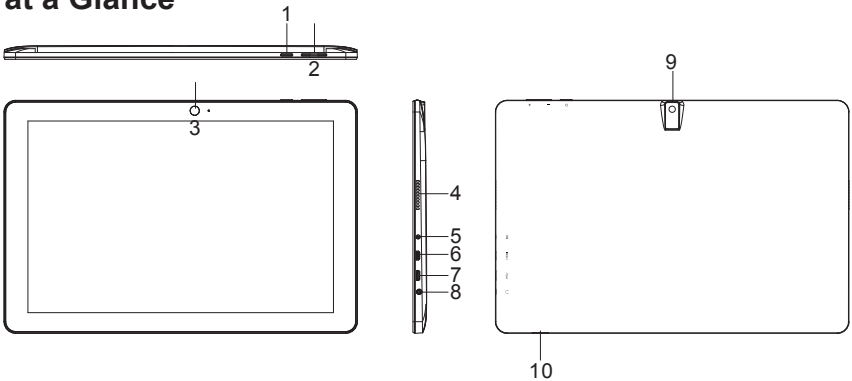

1. POWER

Press to power on/off device, keep pressing "POWER" button for 3 seconds, PC will show up "Slide to shut down your PC" if you keep pressing it for 3 more seconds, the PC will be powered off.

2. Volume+/Volume-

3. FRONT CAMERA

4. SPEAKER

5. DC IN

6. HDMI

7. USB
Connect to a USB device.

8. Headphone
Audio output connection for headphones.

9. REAR CAMERA

10. Card Slot

Safety Information

Read the safety information before using the tablet.

switch off in restricted areas
Switch the device off when mobile PC use is not allowed or when it may cause interference or danger, for example, in aircraft, in hospitals or near medical equipment, fuel, chemicals, or blasting areas. Obey all instructions in restricted areas.

road safety comes first
Obey all local laws. Always keep your hands free to operate the vehicle while driving. Your first consideration while driving should be road safety.

interference
All wireless devices may be susceptible to interference, which could affect performance

qualified service
Only qualified personnel may install or repair this product.

batteries, chargers, and other accessories
Use only batteries, chargers, and other accessories approved by S805G for use with this device. Third-party chargers that comply with the IEC/EN 62684 standard, and that can connect to your device micro USB connector, may be compatible. Do not connect incompatible products.

keep your device dry
Your device is not water-resistant. Keep it dry.

glass parts
The device screen is made of glass. This glass can break if the device is dropped on a hard surface or receives a substantial impact. If the glass breaks, do not touch the glass parts of the device or attempt to remove the broken glass from the device. Stop using the device until the glass is replaced by qualified service personnel.

Safety Information

FCC Statement
This equipment has been tested and found to comply with the limits for a Class B digital device, pursuant to part 15 of the FCC rules. These limits are designed to provide reasonable protection against harmful interference in a residential installation.
This equipment generates, uses, and can radiate radio frequency energy and, if not installed and used in accordance with the instructions, may cause harmful interference to radio communications. However, there is no guarantee that interference will not occur in a particular installation. If this equipment does cause harmful interference to radio or television reception, which can be determined by turning the equipment off and on, the user is encouraged to try to correct the interference by one or more of the following measures:
-Reorient or relocate the receiving antenna.
-Increase the separation between the equipment and receiver.
-Connect the equipment into an outlet on a circuit different from that to which the receiver is connected.
-Consult the dealer or an experienced radio/TV technician for help.

Changes or modifications not expressly approved by the party responsible for compliance with the FCC Rules could void the user's authority to operate this equipment.
This equipment complies with Part 15 of the FCC Rules. Operation is subject to the following two conditions:
(1) This device may not cause harmful interference, and
(2) This device must accept any interference received, including interference that may cause undesired operation.
RF warning statement:
The device has been evaluated to meet general RF exposure requirement.
The device can be used in portable exposure condition without restriction.

Distributed by
Bluestem Brands Inc.,
7075 Flying Cloud Drive,Eden Prairie, MN 55344
Tel:1-800-208-2500
(Monday-Friday 8:00am-8:00pm Central time)

Charging the Battery

Charging the Battery
The tablet has a built-in battery and the battery comes partially charged. You must fully charge the battery before using your device for the first time. After the first charge, you can use the device while charging. Always charge the battery using the 5V/3A power adapter provided.

If the battery is completely discharged, you cannot turn on the device, even with the power adapter connected. Allow a depleted battery to charge for a few minutes before you try to turn on the device.

Note: You cannot sufficiently charge the battery using the USB cable and your PC due to an incorrect current.
To check the battery status, tap the battery icon on the bottom of the screen.

Turning the Tablet On or Off

The following screen drawings are only for reference and please refer to actual screen drawings.

To turn on your tablet

1. Press ⏻ and hold for about 2 seconds to turn on your tablet.
2. If the lock screen image displays, swipe your finger from the bottom of the display to switch to the login screen, and then enter password to log in to Windows.

• Please first create a Microsoft account.

The tablet is ready for use after the Windows Start screen displays.

To turn off the screen

• When the tablet is turned on, press ⏻ to turn off the screen to save battery power.

• Or you can swipe from the right edge of the display to access the menu. Tap All Settings to display the settings. Tap System→ Power & Sleep to set the screen to be turned off after a set time period.

NOTE: If your tablet is in a sleep state, press or tap home button ⊞ to turn on the screen. ⏻

To turn off the tablet

• Press ⏻ and hold until you see "Slide to shut down your PC" on the screen.
Slide to shut down your tablet.

• You can also turn off the tablet in desktop and tablet modes:

In desktop mode, tap on the bottom of the screen to access the menu.
Tap Power→Shut down to turn off the tablet.

To turn off the tablet in tablet mode, first enable the tablet mode by swiping
the screen from the right to access the menu. In addition to the action center, it
also allows access to general settings like airplane mode, rotation lock, and Wi-Fi.
Tap Table mode to enable the tablet mode. Tap Power→Shut down to turn off
the tablet.

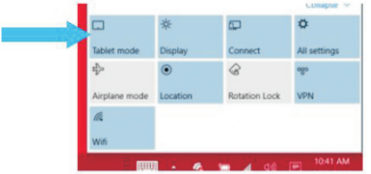

Built-in Applications

Windows 10 comes with built-in apps like Map, Photos, Mail & Calendar, Music and Video.These apps use OneDrive to back up your information and sync seamlessly across your Windows 10 devices, so you're never far from what you need.

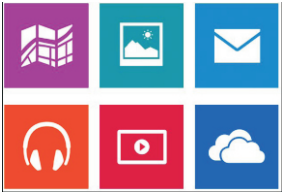

Touch-Screen Navigation

Your tablet has a multi-touch display. You can touch the screen to operate the tablet.

Swipe right
Swiping-in from the right edge of the display reveals the menu.
This menu provides access to the action center and general setting options.

Swipe left
Swiping slowly from the left edge to the right edge of the display reveals thumbnails of the applications.

Swipe down
Swiping-in from the top to the bottom of an application docks or closes the application.

Connecting Your Tablet to a Wi-Fi Network

1. Tap the Wi-Fi symbol on the bottom of the screen. Tap Wi-Fi to enable the Wi-Fi function.
 • A list of available wireless networks will appear.
2. Tap a network to connect to it.
3. If you want your tablet to automatically connect to the network when it's available, tap Connect automatically.
4. Tap Connect.
5. If prompted, type your network security key (network password), and then tap Next.
6. Choose whether or not you want to share with other computers and devices on the network.
 • Choose No if you're connecting to a network in a public place like a Café.

To disconnect from a wireless network
1. Tap the Wi-Fi symbol and then tap the network with a connected status.
2. Tap Disconnect.

Troubleshooting

1.1 Device cannot connect to Wi-Fi
-- Ensure the wireless network is working by testing it using another wireless device.
-- Ensure the device and the wireless router is within the range of the wireless network to be connected too. Walls or other obstructions will reduce the possible distances between wireless devices.
-- Ensure the security password being used is correct. 1.2 Device doesn't turn on
-- You cannot turn on the device when the battery charge is below the critical level, please charge the battery.
-- Press the Power button for 10 seconds on the device and check if it is restarting normally or not.
-- Check if the charger is connected correctly.
1.3 Heat Issues
-- When running multiple applications, using the screen on its brightest setting, or when being charged, this device can get quite hot. This is normal and should not cause any inconvenience when in use.
1.4 System has anomalies and doesn't work correctly
-- Installing some third-party applications may cause the system not to operate correctly. Press the Power button for 10 seconds, the device will re-boot.
1.5 Cannot set E-mail or registration application
– Ensure that the MID is connected to a Wi-Fi network and can connect to the Internet.
– Ensure that your E-mail settings have been entered correctly for the account being accessed.
-- Make sure your system time and local time are correct.
1.6 The stand-by time of the device is too short
-- The duration of the lithium battery varies with environmental temperature changes and the service conditions. If the environment temperature is too low or too high, the duration of the battery will be affected. It is recommended to use this device at normal temperature.
-- Battery life is dependent on usage. High volume, WIFI, and the frequent use may cause the battery to be drained at a higher rate.
1.7 No sound via earphone
– Please check if the volume setting is 0
-- Please check if audio file is broken, and try to play another audio file to confirm. If the audio file is broken, it may cause severe noise or static.

Troubleshooting

1.8 The color distortion of video or picture display
– Press the Power button for 10 seconds on the device to resolve this issue.
1.9 Cannot copy files
-- Please check if the device is connected to the computer correctly.
– Please check if the memory space is full
-- Please check if the USB cable is broken.
1.10 Other troubles
Please fix the other troubles with the following two steps before you return the MID/Tablet PC to us:
– Step 1: Press the Power button for 10 seconds, then check if the function works correctly;
– Step 2: Upgrade the firmware and restart the MID/Tablet PC, then check if the function works correctly.

Specifications

Processor	INTEL Z8350 WINDOWS	
Storage	RAM	4G
	ROM	32 GB
Display	10.1” IPS LCD (800X1280), Capacitive touch screen	
Wi-Fi Networking	IEEE 802.11 b/g/n	
Audio Output	3.5mm headphone	
Camera	Front	2 M
	Rear	5 M
Operating System	WINDOWS 10	
Power	Rechargeable Li-poly battery Power Adapter(DC IN 5V,3A)	
Speakers	1x1W speaker	