C-2S specification

(WiFi &B LE module)

product model：C-2S
document number ： X ZX_RD_SP_C-2S V1.0
hardware version ： V 1.0
Revision No ： V 1.0
commencement date ： 2020-08-19

保密

Documents containing (C-CHIP) confidential documents may not be passed on without permission
File include (C-CHIP) classified documents, with out permission, can not be excluded

Change record Change History:

Change record					
Version	Revised content	Page	Revision date	Revision	Auditor
V1.0	Initial development	/	2020-08-19	Wu Delong	

保密

Contact information

Web site: WWW.C-CHIP.COM.CN
Tel :0755-29179480/81/82
Fax :0755-84736169
Address: A3 Dong, Shajing Donghuan Industrial Zone, Baoan District, Shenzhen

Directory

1 Summary Summary....3
2 Basic characteristics Features....4
3 Application Application Field....4
4 Box Module block diagram....5
5 Performance Parameter of performance parameters....5
5.1 Module parameters....5
5.2 Recommended working conditions....6
5.3 Maximum range....6
5.4 Current....6
5.5 RF parameters....7
5.6 Input/output terminal characteristics....7
5.7 Electrostatic testing....7
6 Module Size Chart and Foot Defining Mechanical Size and Pin Definition....8
6.1 Module Size Chart....8
6.2 Module Foot Bit Definition Chart....8
6.3 Pin Function Description....8
7 Application Note for Note....10
8 Reflow Temperature Profile recommended reflux temperature....11

1 Summary Summary

C-2S is integrated WIFI& Bluetooth BLE dual-mode module, using C-C HIP CC8000_QFN32-- integrated

single chip scheme. ARM9 32-bit MCU kernel ,120 MHz main frequency, built-in 256 KBRAM. Supports 802.11 b/g/n WIFI standards.

- Support 802.11 b/g/n standards
- Station,Soft AP,Station+Soft AP support
- Maximum transmission rate MHz 72.2 Mbps using 20 bandwidth

Module built-in board antenna, external antenna optional
Working voltage: DC 3.3-3.6V,
Working ambient temperature :-20℃to +85℃

2 Basic characteristics Features

- Supporting BT LE4.2 standards,
- support 802.11 b/g/n 1x1 protocol
- b: 1,2,5.5,11 802.11
- g: 6,9,12,18,24,36,48,54 802.11
- 802.11 n HT20: MCS0~7
- Support 20 MHz bandwidth and STBC
- STA/AP/Direct/Repeater network model supported
- Support SGI、Green-Field Preamble and A-MPDU
- Supporting WPA,WPA2,WAPI security mechanisms
- 50 MHz SDIO interface support
- On-chip 2 M FLASH, extend to 4 M, support transparent download
- Support block reply
- Support fragmentation and reorganization
- Support Infrastructure Network (Infrastructure BSS) Station/ SoftAP Mode

Interface and external equipment

- 1 x UART Interface
- 1 x I2C (Reuse)
- 5 x PMW Output
- 8 Programmable GPIO(Multiplexing)
- 1 x ADC Interface

3 Application Application Field

- IOT Internet of things applications
- Smart Home
- Industrial control
- Network equipment

4 Box Module block diagram

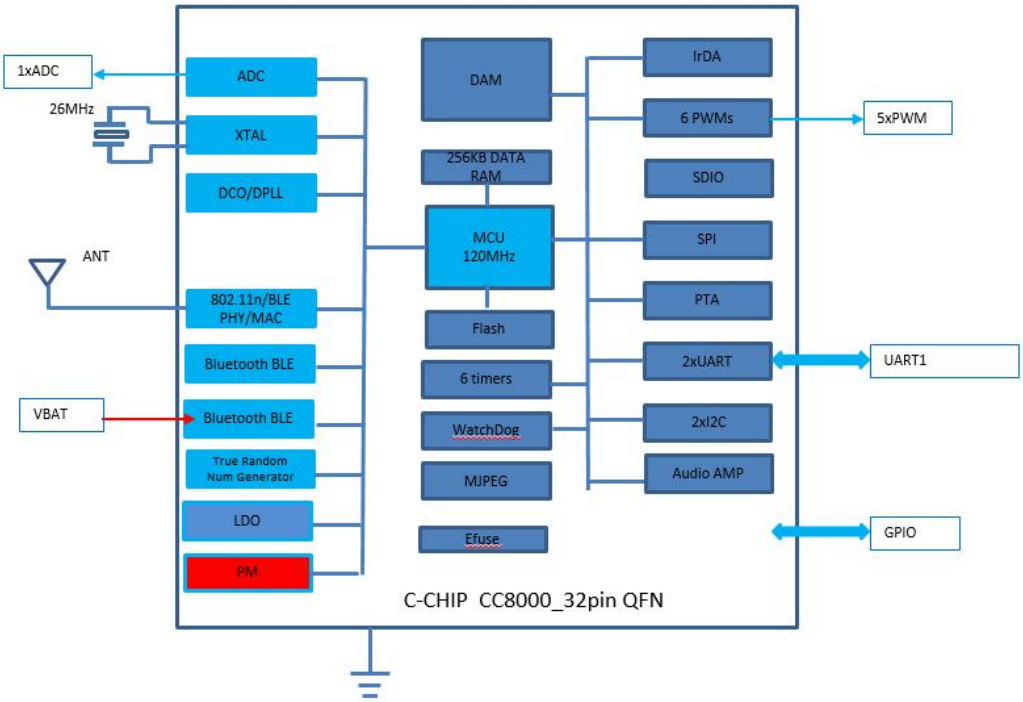

5 P erformance P arameter of performance parameters

5.1 Module parameters

Module parameters	
Wireless standards	WIFI 802.11b /g/n, 1T1R
Antenna	PCB antenna
Frequency range	2.4G WIFI: 2412-2472 MHz (For EU) BLE: 2402-2480 MHz
Transmission power	dBm IEEE802.11b <17 dBm IEEE802.11g <14 dBm IEEE802.11n <13 dbm BLE <6
Receiving sensitivity	<unk6> b <-90 dB <unk6> g <-73 dB <unk6> n <-71 dB BLE<-95 dB
Wireless network type	STA/AP/AP+STA
WIFI distance	>100 m
Extended interface	UART, GPIO, ADC , PWM, I2C,
Security mechanisms	W EP,WPA -PSK/WPA 2_PSK,WPA/WPA2
Type of encryption	WEP64/WEP128/AES
Online upgrade	Support
Size	mm 15(W)×18 mm (L)×3.0(H) DIP
Certification information	Certification

5.2 Recommended working conditions

Scope of operation	Min	Typical	Max	Unit
Operating temperature range	-20	-	+85	° C
VCC	+3.1	+3.3	+3.6	V
I/O power (VDD_PIO)	3.1	+3.3	+3.6	V
AIO input	0	-	+3.6	V
Frequency range	2400		2484	MHz

5.3 Maximum range

Scope of operation	Min	Max	Unit
Storage temperature	-20	+85	° C
V CC operating voltage	0	+3.6	V
I/O voltage	0	+3.6	V

5.4 Current

Parameters	Test conditions	Min	Typical	Max	Unit
Fast distribution network status (Bluetooth Distribution Network)	Module in fast distribution network state, Wi-Fi Light flash		87	380	mA
Fast distribution network status (AP distribution network)	Module in hot distribution network state, Wi-Fi Slow light		95	402	mA
Fast distribution network status (EZ distribution network)	Module in fast distribution network state, WIFI Light flash		106	386	mA
Network connection idle State	Wi-Fi module is in working condition The indicator lights always go		55	132	mA
Network connection operation State	Wi-Fi module is in working condition The indicator lights always go		38	206	mA
Deep Standby	MCU stop. Can only be awakened by external interruptions and internal RTC		2		mA
Shutdown mode	CEN=0		7		uA
All of the above test results are in 25°C room temperature 3.3 V power supply mode					

工作状态	模式	速率	发射功率/接收	平均值	峰值 (典型值)	单位
发射	11b	11Mbps	+17dBm	295	354	mA
发射	11g	54Mbps	+13.5dBm	266	300	mA
发射	11n	MCS7	+13dBm	260	290	mA
接收	11b	11Mbps	连续接收	98	100	mA
接收	11g	54Mbps	连续接收	98	100	mA
接收	11n	MCS7	连续接收	98	100	mA

5.5 R F parameters

Parameters	Conditions	Minimum	Typical values	Maximum	Unit
Working frequency		2412	-	2484	MHz
Transmission power	IEEE802.11b	-	17	-	dBm
	IEEE802.11g	-	14	-	dBm
	IEEE802.11n	-	13	-	dBm
	BLE	-	6	-	dBm
Sensitivity	IEEE802.11b	-	-	-90	dBm
	IEEE802.11g	-	-	-73	dBm
	IEEE802.11n	-	-	-71	dBm
	BLE	-	-	-95	dBm
All of the above test results are in 25° C room temperature 3.3 V power supply mode					

Tx Verify Summary:

ItemNo.	ANT	Ch	Freq	Rate	EVM	Pwr	FeqErr	Mask	Result
15	ANT0	1	2412	11M	-17.12dB	17.87dBm	-0.57ppm	0.00%	PASS
16	ANT0	7	2442	11M	-16.35dB	17.63dBm	-0.40ppm	0.98%	PASS
17	ANT0	13	2472	11M	-16.43dB	17.24dBm	-0.01ppm	1.53%	PASS
18	ANT0	1	2412	54M	-31.08dB	14.92dBm	-0.38ppm	0.00%	PASS
19	ANT0	7	2442	54M	-30.93dB	14.82dBm	-0.32ppm	0.00%	PASS
20	ANT0	7	2442	HT20-7	-31.63dB	13.58dBm	-0.39ppm	0.00%	PASS
21	ANT0	7	2442	HT40-7	-28.86dB	14.42dBm	-0.08ppm	0.00%	PASS

5.6 Input/output terminal characteristics

Scope of operation	Minimum value	Typical values	Maximum value	Unit
VIL input logic low level	VSS-0.3	-	VSS+0.3	V
VIH input logic high level	VCC-0.3	-	VCC+0.3	V
Tr/Tf	-	-	25	ns
Output level				
VOL output logic low, IOL=-0.25 mA)	VSS	-	VSS+0.3	V
VOH input logic high level, IO H =0.25 mA)	VCC-0.3	-	VCC+0.3	V
Input and tri-state current	Min	Typical	Max	Unit
Up and down resistance	3.5	4.7	6.0	KΩ
Weak up and down	8	40	50	uA
CI input capacitance	-	5	-	pF

5.7 Electrostatic testing

Project	Conditions	Parameters	Unit
Electrostatic release (human model HBM)	Mannequin HBM , TAMB=25 HBM , TAMB=C	+/- 2000	V
Electrostatic release (machine model MM)	Machine model HBM , TAMB=25 HBM , TAMB=C	+/-400	V

6 Module Size Chart and Foot Defining Mechanical Size and Pin Definition

6.1 Module Size Chart

6.2 Module Foot Bit Definition Chart

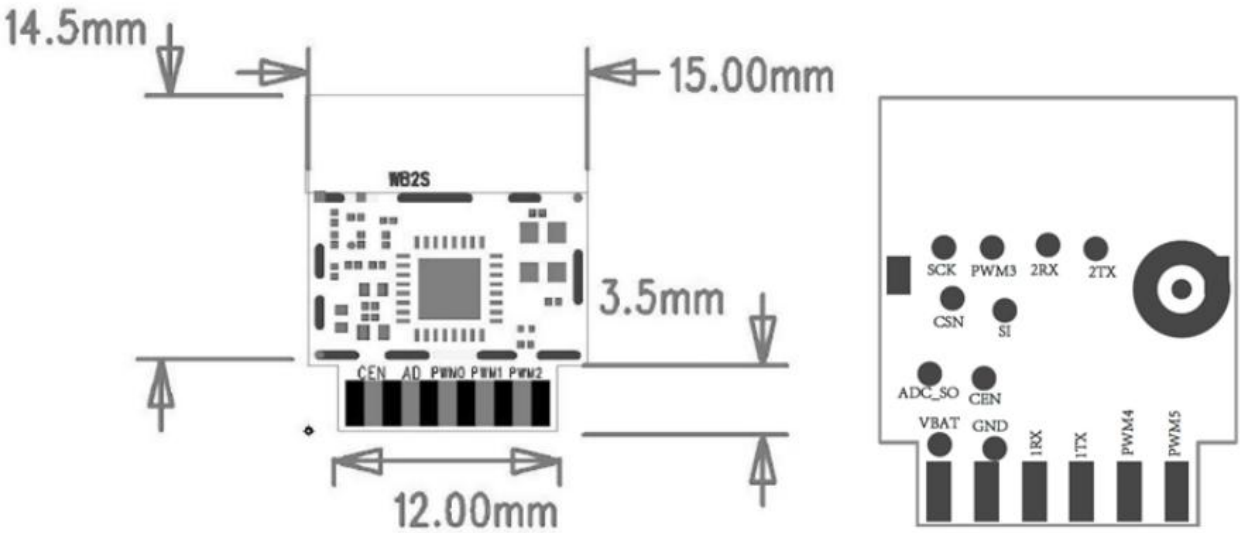

6.3 Pin Function Description

引脚	符号	IO 类型	功能
1	VBAT	P	模块电源引脚（3.3V）对接 IC-VBAT

引脚	符号	IO 类型	功能
2	PWM2	I/O	通用 GPIO 口对接 IC-P8
3	GND	P	电源参考地
4	PWM1	I/O	通用 GPIO 口对接 IC-P7
5	1RX	I/O	UART1_RXD（用户串口）对接 IC-P10
6	PWM0	I/O	通用 GPIO 口对接 IC-P6
7	1TX	I/O	UART1_TXD（用户串口）对接 IC-P11
8	AD	AI	ADC 端口对接 IC-P23
9	PWM4	I/O	通用 GPIO 口对接 IC-P24
10	CEN	I/O	外部使能复位引脚（低电平有效）对接 IC-CEN
11	PWM5	I/O	通用 GPIO 口对接 IC-P26

说明：P 表示电源引脚，I/O 表示输入输出引脚，AI 表示模拟输入引脚。

引脚序号	符号	IO 类型	功能
1	SO	IO	Flash 下载时的数据输出，用于模块生产烧录对接 IC-P23/ADC3
2	SI	IO	Flash 下载时的数据输入，用于模块生产烧录对接 IC-P22
3	CS	IO	Flash 下载时的片选，用于模块生产烧录对接 IC-P21
4	SCK	IO	Flash 下载时的时钟，用于模块生产烧录对接 IC-P20

说明：测试引脚不推荐使用。

7 Application Note for Note

A. During the use of the module, please pay attention to avoid the influence of interference sources such as power amplifier, boost circuit and DC/DC circuit on the module, and avoid the module power supply circuit forming series circuit with high power circuit unit to reduce the interference

B. If there are batteries, metal objects, LCD screens, horns, etc. next to the module antenna, the distance from the antenna is required to be at least 15 mm (as shown)

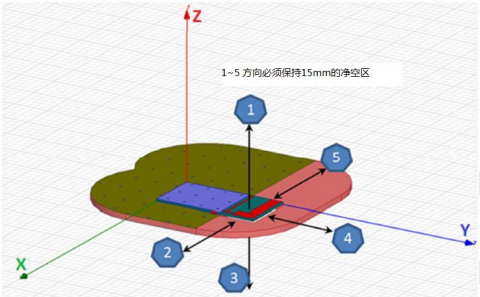

C. PCB board: because metal will weaken the function of the antenna, when giving the module board, it is strictly forbidden to lay the ground and line under the module antenna.

D. Because the metal case is shielding the RF signal, it is recommended not to install it in the metal case

E. As for the WIFI environment, the wireless signal is easily affected by the surrounding environment, such as trees, metals and other obstacles will absorb the wireless signal to a certain extent, so in practical applications, the distance of data transmission is affected to a certain extent

8 Reflow Temperature Profile recommended reflux temperature

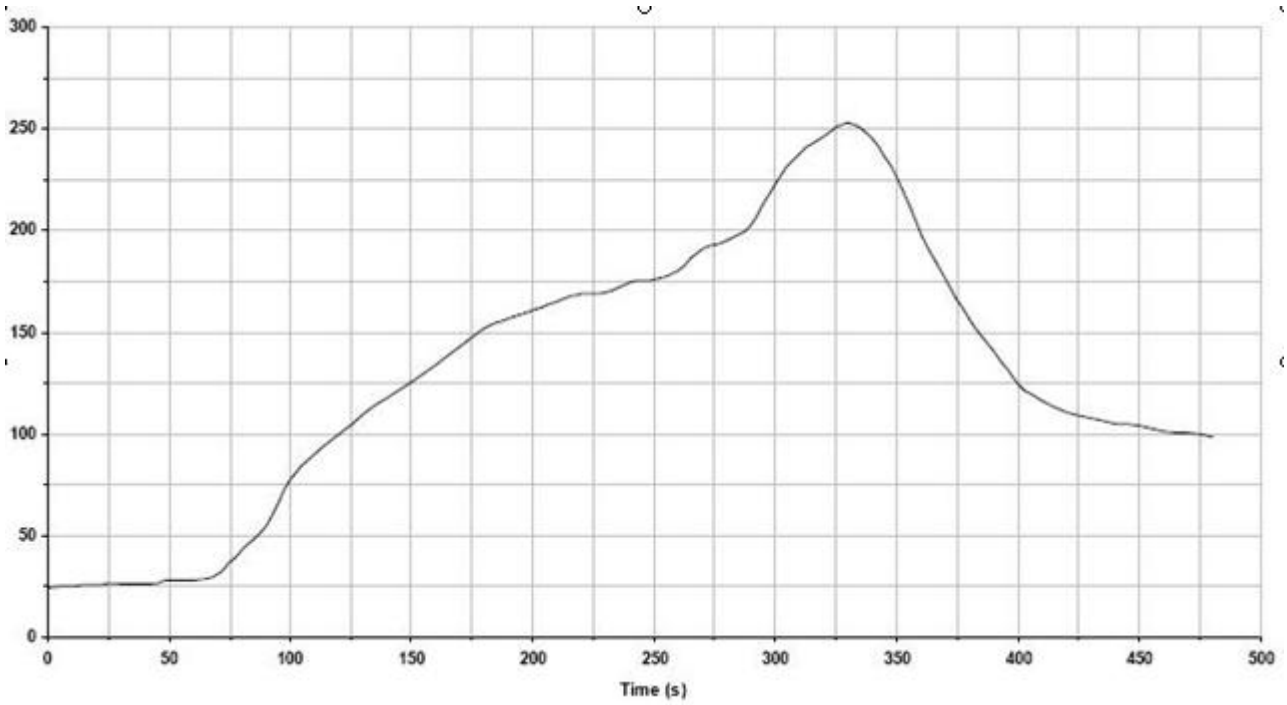

Key features of the profile：

- Initial Ramp=1-2.5℃/ sec to 175℃equilibrium
- Equilibrium time=60 to 80seconds

Ramp to Maximum temperature (250℃)=3℃/ sec Max

- Time above liquidus temperature(217℃ seconds 45-90
- Device absolute maximum reflow temperature：250℃

FCC regulatory compliance statement

§15.19 Statement

This device complies with Part 15 of the FCC Rules. Operation is subject to the following two conditions: (1) this device may not cause harmful interference, and (2) this device must accept any interference received, including interference that may cause undesired operation.

§15.21 Information to user

Warning: changes or modifications not expressly approved by the party responsible for compliance could void the user's authority to operate the equipment.

- List of applicable FCC rules:

47 CFR Part 15, Subpart C 15.203
47 CFR Part 15, Subpart C 15.205
47 CFR Part 15, Subpart C 15.207
47 CFR Part 15, Subpart C 15.209
47 CFR Part 15, Subpart C 15.247
47 CFR Part 2 2.1091

- Summarize the specific operational use conditions

This module can be used in IOT devices. For example, after installing the single module, the printer can be connected to the router through the wireless network. Within the WiFi coverage, the user can send various printing instructions from the smartphone or PC, which will be very convenient. The input voltage to the module is nominally 5V. Only the embedded integral antenna is allowed. Any other external antenna is prohibited.

- Limited module procedures

This module is not a limited module.

- Trace antenna designs

The antenna is not a trace antenna.

- RF exposure considerations

This Module complies with FCC radiation exposure limits set forth for an uncontrolled environment. This equipment should be installed and operated with a minimum distance of 20cm between the radiator and your body. This transmitter must not be co-located or operating in conjunction with any other antenna or transmitter.

- Antennas

This module is tested with PCB antenna, and the Max. antenna gain is 0dBi.

If you desire to increase antenna gain and either change antenna type or use same antenna type certified, a Class II permissive change application is required to be filed by us, or you (host manufacturer) can take responsibility through the change in FCC ID (new application) procedure followed by a Class II permissive change application.

- Label and compliance information

Please notice that if the FCC identification number is not visible when the module is installed inside another device, then the outside of the device into which the module is installed must also display a label referring to the enclosed module. This exterior label can use wording such as the following: "Contains ***FCC ID: 2AR7VC-2S***" any similar wording that expresses the same meaning may be used.

§ 15.19 Labelling requirements shall be complied on end user device.
Labelling rules for special device, please refer to §2.925, § 15.19 (a)(5) and relevant KDB publications. For E-label, please refer to §2.935.

- Information on test modes and additional testing requirements

The OEM integrator is responsible for ensuring that the end-user has no manual instruction to remove or install module.
The module is limited to installation in mobile application, a separate approval is required for all other operating configurations, including portable configurations with respect to §2.1093 and difference antenna configurations.

Test software access to different test modes: Wifi Test Tool v1.4.0
Testing item, Frequencies, Transmit Power, Modulation Type, test Antennas can be selected on the test script instructions.

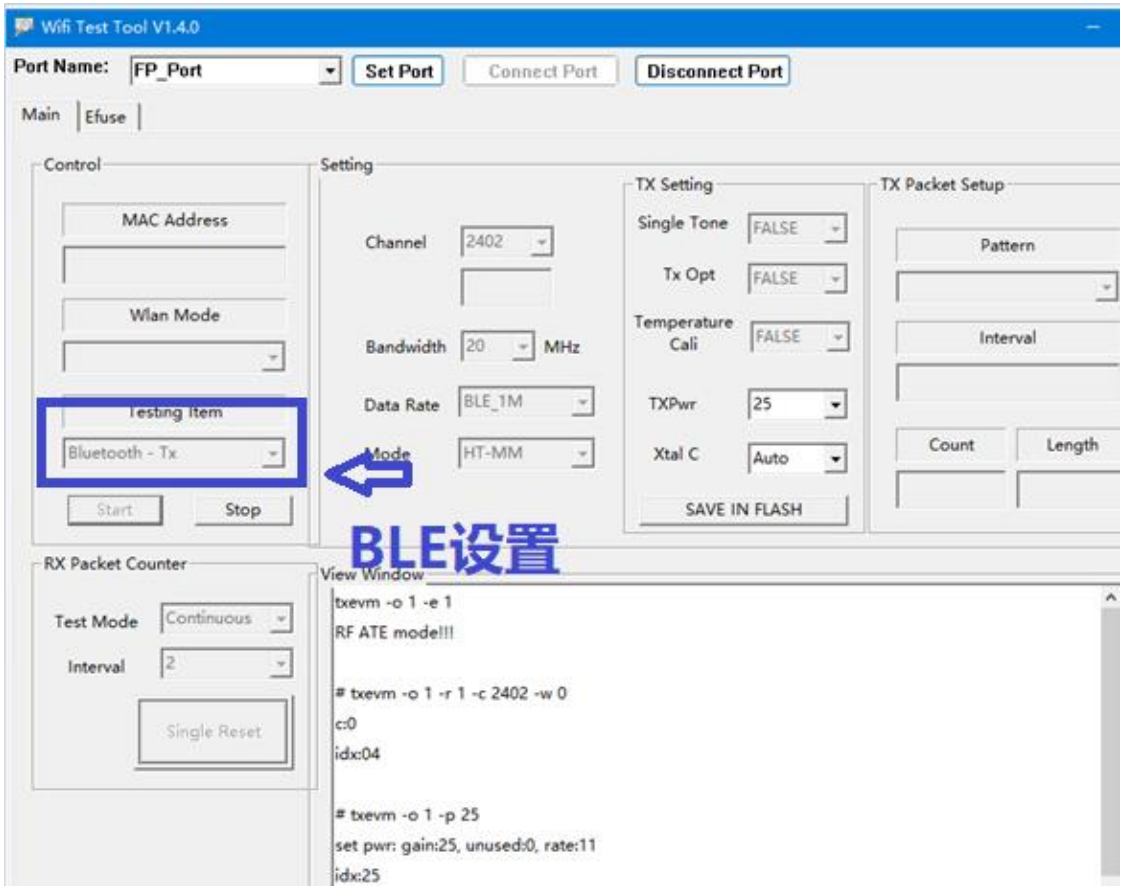

- Additional testing, Part 15 Subpart B disclaimer

This modular transmitter is only FCC authorized for the specific rule parts listed on our grant, host product manufacturer is responsible for compliance to any other FCC rules that apply to the host not covered by the modular transmitter grant of certification.

Host manufacturer in any case shall ensure host product which is installed and operating with the module is in compliant with Part 15B requirements.

Please note that For a Class B or Class A digital device or peripheral, the instructions furnished the user manual of the end-user product shall include statement set out in §15.105 Information to the user or such similar statement and place it in a prominent location in the text of host product manual. Original texts as following:

For Class B

Note: This equipment has been tested and found to comply with the limits for a Class B digital device, pursuant to part 15 of the FCC Rules. These limits are designed to provide reasonable protection against harmful interference in a residential installation. This equipment generates, uses and can radiate radio frequency energy and, if not installed and used in accordance with the instructions, may cause harmful interference to radio communications. However, there is no guarantee that interference will not occur in a particular installation. If this equipment does cause harmful interference to radio or television reception, which can be determined by turning the equipment off and on, the user is encouraged to try to correct the interference by one or more of the following measures:

—Reorient or relocate the receiving antenna.
—Increase the separation between the equipment and receiver.
—Connect the equipment into an outlet on a circuit different from that to which the receiver is connected.
—Consult the dealer or an experienced radio/TV technician for help.