保密等级：机密

SPECIFICATION

产品规格书

SKI.WB663U.17 A23406

IEEE 802.11b/g/n/a/ac 2T2R USB WiFi Module

Integrated BT 2.1+EDR/4.2/5.1

Approved by Shikun		
Checked by 审核	Rechecked by 复审	Approved by 批准
李志明		

Please send the original back to us after you have approved and signed.
客户承认签章后敬请寄回正本一份。

Approved by customer		
Comments 确认意见	Approved by 批准签字	Company's seal 盖章
Customer's Name:		

版权 CVTE 所有，本文档内容属商业机密。未经允许，任何组织或个人不得以任何形式复制和传播。

REVISION HISTORY

VERSION	DATE	BOARD ID	PAGE	DESCRIPTION	AUTHOR
V1.0	2023.10.17	SKI.WB663U.17	All	First Issued	Lizhiming

版权 CVTE 所有，本文档内容属商业机密。未经允许，任何组织或个人不得以任何形式复制和传播。

Content

1. Introduction（简介）.....1
2. Features（特性）.....1
3. Block Diagram（结构框图）.....2
4. Package Outline and Mounting（外形及安装尺寸）.....2
5. Pin Definition（引脚定义）.....3
6. Product Pictures（实物图片）.....4
7. Key Materials（关键物料）.....5
8. General Requirements（一般要求）.....5
9. Electrical Characteristics（电气特性）.....5
9.1 IEEE 802.11b Section.....5
9.2 IEEE 802.11g Section.....6
9.3 IEEE 802.11n HT20 Section.....7
9.4 IEEE 802.11n HT40 Section.....8
9.5 IEEE 802.11a Section.....9
9.6 IEEE 802.11n HT20 Section(5GHz).....10
9.7 IEEE 802.11n HT40 Section(5GHz).....10
9.8 IEEE 802.11ac Section(5GHz).....11
9.9 Bluetooth Section.....12
10. Reference Design（参考设计）.....14
10.1 Timing specification（时序规范）.....14
10.2 DC Electrical Characteristics（直流电气特性）.....14
10.3 Reference schematic（参考原理图）.....15
11. Mechanical,Environmental and Reliability Tests（机械、环境和可靠性测试）16
12. Package（包装）.....18
13. Storage and Production（存储、生产）.....19
13.1 Storage requirements（存储要求）.....19
13.2 Production parameters（生产参数）.....19

版权 CVTE 所有，本文档内容属商业机密。未经允许，任何组织或个人不得以任何形式复制和传播。

1. Introduction（简介）

SKI.WB663U.17 module is based on MediaTek MT7663BUN solution. MT7663BUN is highly integrated single chip which features a low power 2x2 11a/b/g/n/ac dual-band Wi-Fi subsystem and a Bluetooth subsystem. The Wi-Fi subsystem contains the 802.11a/b/g/n/ac radio, baseband, and MAC that are designed to meet both the low power and high throughput application. MT7663BUN has a 32-bit RISC MCU that handles Wi-Fi and Bluetooth tasks. The Bluetooth subsystemcontains the Bluetooth radio, baseband, link controller. It also uses the 32-bit RISC MCU for the Bluetooth protocols.This documentation describes the engineering requirements specification.

SKI.WB663U.17 模块基于 MEDIATEK MT7663BUN 解决方案。MT7663BUN 是高度集成的单芯片，具有低功耗 2x2 11a/b/g/n/ac 双频 Wi-Fi 子系统和蓝牙子系统。 Wi-Fi 子系统包含 802.11a/b/g/n/ac 无线电，基带和 MAC 旨在满足低功耗和高吞吐量应用。MT7663BUN 有一个 32 位 RISC MCU，可处理 Wi-Fi 和蓝牙任务。蓝牙子系统包含蓝牙无线电、基带、链路控制器。它还使用 32 位 RISC MCU 来实现蓝牙协议。本文件描述了工程需求规范。

2. Features（特性）

Reserving System 接收制式	IEEE Std. 802.11a
	IEEE Std. 802.11b
	IEEE Std. 802.11g
	IEEE Std. 802.11n
	IEEE Std. 802.11ac
	Bluetooth 2.1+EDR/3.0/4.x/5.1
Chip Solution 芯片方案	MT7663BUN
Band 波段	2.4GHz/5GHz
Dimensions 尺寸	30mm×25mm×5.5mm
Bandwidth 带宽	20/40/80M

型号	安装方式	支持标准	数据速率 (MAX)	频段	天线接口	备注
SKI.WB663U.17	SMD	IEEE 802.11a/b/g/n/ac	866Mbps	2.4/5GHz	Internal antenna（WIFI）/Stamp Hole 或 IPEX（BT）	

版权 CVTE 所有，本文档内容属商业机密。未经允许，任何组织或个人不得以任何形式复制和传播。

3. Block Diagram（结构框图）

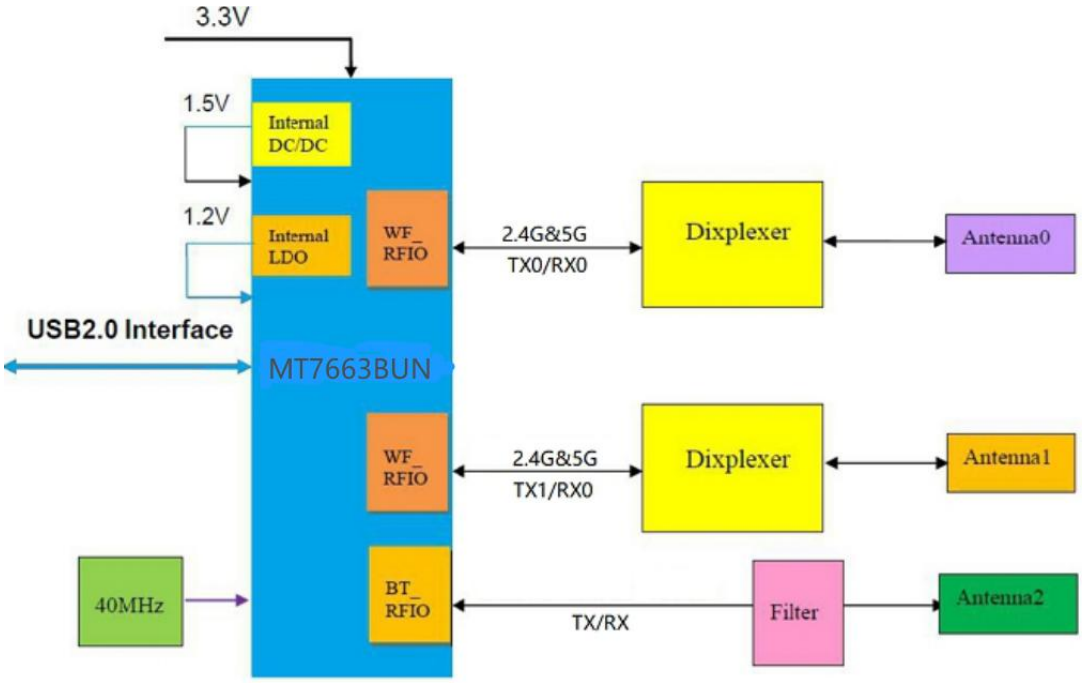

4. Package Outline and Mounting（外形及安装尺寸）

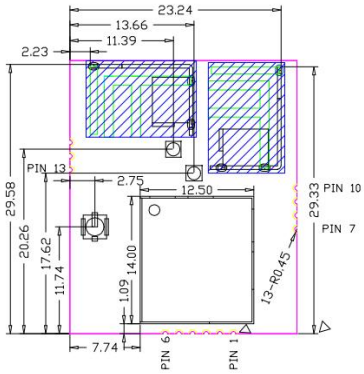

模组俯视图

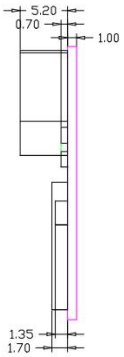

模组侧视图

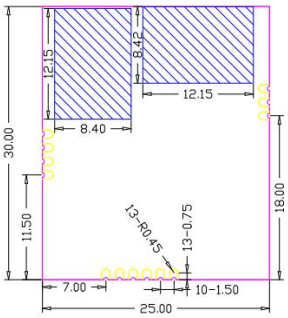

模组底视图

版权 CVTE 所有，本文档内容属商业机密。未经允许，任何组织或个人不得以任何形式复制和传播。

5. Pin Definition（引脚定义）

Bottom VIEW

PIN	SYMBOL	DESCRIPTION
1	GND	GND
2	DP	USB_DP
3	DM	USB_DM
4	VCC	3.3V 供电
5	RESET	内部有 10K 上拉电阻，默认高电平，低电平复位
6	WI_WAKE_H_IC	默认高电平，低电平有效 低电平 WIFI 唤醒主控
8	NC	NC
9	BT_HOST_WAKE	默认高电平，低电平有效 低电平 BT 唤醒主控
7,10,11,13	GND	GND
12	BT_ANT	BT RF 接口

版权 CVTE 所有，本文档内容属商业机密。未经允许，任何组织或个人不得以任何形式复制和传播。

6. Product Pictures（实物图片）

模组料号	正视图	背视图	备注
002.029.0001064			MTK7663BUN 芯片 带屏蔽罩
002.029.0001111			MTK7663BUN 芯片 带屏蔽罩 BT 邮票孔出线

丝印说明：

（1）背视图内红色方框处的字符为产品型号

（2）背视图内黄色方框处的字符为产品周期号

版权 CVTE 所有，本文档内容属商业机密。未经允许，任何组织或个人不得以任何形式复制和传播。

7. Key Materials（关键物料）

序号	关键件名称	型号	规格/材料	备注
1	集成电路	MT7663BUN	76-QFN	
2	PCB	SKI.WB663U.17	FR-4,4LAY	
3	晶体振荡器	40MHz,±10ppm,2016	40MHz	JWT/MDH
4	双工器	RFDIP160806ALM6T30	2400~2500MHz 0.5db 4900~5950MHz 0.6db	Walsin/ Sunlord

8. General Requirements（一般要求）

No.	Feature	Description
8-1	Operation Voltage 工作电压范围	3.3V+/-0.3
8-2	Current Consumption 最大电流	1500mA
8-3	Ripple 纹波	≤10%
8-4	Operation Temperature 工作温度范围	0°C to +40°C
8-5	Antenna Type 天线类型	Internal antenna/Stamp Hole
8-6	USB	High Speed USB 2.0 Interface
8-7	Storage Temperature 存储温度	-40°C to +85°C

9. Electrical Characteristics（电气特性）

除非另有说明，电气规范试验都在下列条件下进行：

环境条件温度：25℃±5℃；

电源电压：模块上输入电压 3.3V+/-0.3；

The Test for electrical specification was performed under the following condition unless otherwise specified：

Ambient condition Temperature :25℃ ± 5℃;

Power supply voltages：3.3V+/-0.3 input power at the Module;

9.1 IEEE 802.11b Section

Items	Contents				
Specification	IEEE802.11b				
Mode	CCK				
Channel	CH1 to CH13				
Data rate	1, 2, 5.5, 11Mbps				
TX Characteristics	Min.	Typ.	Max.	Unit	Remark
1. Power Levels(Calibrated)					
1) For antenna port	15	17	19	dBm	
2. Spectrum Mask @ target power					

版权 CVTE 所有，本文档内容属商业机密。未经允许，任何组织或个人不得以任何形式复制和传播。

1) fc +/-11MHz to +/-22MHz	-	-	-30	dBr	
2) fc > +/-22MHz	-	-	-50	dBr	
3 Constellation Error(EVM)@ target power					
1) 1Mbps	-	-	-10	dB	
2) 2Mbps	-	-	-10	dB	
3) 5.5Mbps	-	-	-10	dB	
4) 11Mbps	-	-	-10	dB	
4. Frequency Error	-20	-	20	ppm	
RX Characteristics	Min.	Typ.	Max.	Unit	
5 Minimum Input Level Sensitivity (each chain)					
1) 1Mbps (FER ≦8%)	-	-	-83	dBm	
2) 2Mbps (FER ≦8%)	-	-	-80	dBm	
3) 5.5Mbps (FER ≦8%)	-	-	-79	dBm	
4) 11Mbps (FER ≦8%)	-	-	-76	dBm	
6 Maximum Input Level (FER ≦8%)	-10	-	-	dBm	

9.2 IEEE 802.11g Section

Items	Contents				
Specification	IEEE802.11g				
Mode	OFDM				
Channel	CH1 to CH13				
Data rate	6, 9, 12, 18, 24, 36, 48, 54Mbps				
TX Characteristics	Min.	Typ.	Max.	Unit	Remark
1. Power Levels					
1) For antenna port	13	15	17	dBm	
2. Spectrum Mask @ target power					
1) at fc +/-11MHz	-	-	-20	dBr	
2) at fc +/-20MHz	-	-	-28	dBr	
3) at fc > +/-30MHz	-	-	-40	dBr	
3 Constellation Error(EVM)@ target power					
1) 6Mbps	-	-	-5	dB	
2) 9Mbps	-	-	-8	dB	
3) 12Mbps	-	-	-10	dB	
4) 18Mbps	-	-	-13	dB	
5) 24Mbps	-	-	-16	dB	
6) 36Mbps	-	-	-19	dB	
7) 48Mbps	-	-	-22	dB	
8) 54Mbps	-	-	-25	dB	
4 Frequency Error	-20	-	20	ppm	
RX Characteristics	Min.	Typ.	Max.	Unit	

版权 CVTE 所有，本文档内容属商业机密。未经允许，任何组织或个人不得以任何形式复制和传播。

5 Minimum Input Level Sensitivity (each chain)					
1) 6Mbps (PER ≦10%)	-	-	-85	dBm	
2) 9Mbps (PER ≦10%)	-	-	-84	dBm	
3) 12Mbps (PER ≦10%)	-	-	-82	dBm	
4) 18Mbps (PER ≦10%)	-	-	-80	dBm	
5) 24Mbps (PER ≦10%)	-	-	-77	dBm	
6) 36Mbps (PER ≦10%)	-	-	-73	dBm	
7) 48Mbps (PER ≦10%)	-	-	-69	dBm	
8) 54Mbps (PER ≦10%)	-	-	-65	dBm	
6 Maximum Input Level (PER ≦10%)	-20	-	-	dBm	

9.3 IEEE 802.11n HT20 Section

Items	Contents				
Specification	IEEE802.11n HT20 @ 2.4GHz				
Mode	OFDM				
Channel	CH1 to CH13				
Data rate (MCS index)	MCS0/1/2/3/4/5/6/7				
TX Characteristics	Min.	Typ.	Max.	Unit	
1. Power Levels					
1) For antenna port	12	14	16	dBm	
2. Spectrum Mask @ target power					
1) at fc +/-11MHz	-	-	-20	dBr	
2) at fc +/-20MHz	-	-	-28	dBr	
3) at fc > +/-30MHz	-	-	-45	dBr	
3. Constellation Error(EVM)@ target power					
1) MCS0	-	-	-5	dB	
2) MCS1	-	-	-10	dB	
3) MCS2	-	-	-13	dB	
4) MCS3	-	-	-16	dB	
5) MCS4	-	-	-19	dB	
6) MCS5	-	-	-22	dB	
7) MCS6	-	-	-25	dB	
8) MCS7	-	-	-28	dB	
4. Frequency Error	-20	-	20	ppm	
RX Characteristics	Min.	Typ.	Max.	Unit	
5.Minimum Input Level Sensitivity (each chain)					
1) MCS0 (PER ≦10%)	-	-	-82	dBm	
2) MCS1 (PER ≦10%)	-	-	-79	dBm	
3) MCS2 (PER ≦10%)	-	-	-77	dBm	

版权 CVTE 所有，本文档内容属商业机密。未经允许，任何组织或个人不得以任何形式复制和传播。

4) MCS3 (PER ≤10%)	-	-	-74	dBm	
5) MCS4 (PER ≤10%)	-	-	-70	dBm	
6) MCS5 (PER ≤10%)	-	-	-66	dBm	
7) MCS6 (PER ≤10%)	-	-	-65	dBm	
8) MCS7 (PER ≤10%)	-	-	-64	dBm	
7. Maximum Input Level (PER ≤10%)	-20	-	-	dBm	

9.4 IEEE 802.11n HT40 Section

Items	Contents				
Specification	IEEE802.11n HT40 @ 2.4GHz				
Mode	OFDM				
Channel	CH3 to CH11				
Data rate (MCS index)	MCS0/1/2/3/4/5/6/7				
TX Characteristics	Min.	Typ.	Max.	Unit	
1. Power Levels (Calibrated)					
1) For antenna port	11	13	15	dBm	
2. Spectrum Mask @target power					
1) at fc +/-22MHz	-	-	-20	dBr	
2) at fc +/-40MHz	-	-	-28	dBr	
3) at fc > +/-60MHz	-	-	-45	dBr	
3. Constellation Error(EVM)@ target power					
1) MCS0	-	-	-5	dB	
2) MCS1	-	-	-10	dB	
3) MCS2	-	-	-13	dB	
4) MCS3	-	-	-16	dB	
5) MCS4	-	-	-19	dB	
6) MCS5	-	-	-22	dB	
7) MCS6	-	-	-25	dB	
8) MCS7	-	-	-28	dB	
4. Frequency Error	-20	-	20	ppm	
RX Characteristics	Min.	Typ.	Max.	Unit	
5. Minimum Input Level Sensitivity (each chain)					
1) MCS0 (PER ≤10%)	-	-	-79	dBm	
2) MCS1 (PER ≤10%)	-	-	-76	dBm	
3) MCS2 (PER ≤10%)	-	-	-74	dBm	
4) MCS3 (PER ≤10%)	-	-	-71	dBm	
5) MCS4 (PER ≤10%)	-	-	-67	dBm	
6) MCS5 (PER ≤10%)	-	-	-63	dBm	
7) MCS6 (PER ≤10%)	-	-	-62	dBm	
8) MCS7 (PER ≤10%)	-	-	-61	dBm	

版权 CVTE 所有，本文档内容属商业机密。未经允许，任何组织或个人不得以任何形式复制和传播。

6. Maximum Input Level (PER ≦10%)	-20	-	-	dBm	

9.5 IEEE 802.11a Section

Items	Contents				
Specification	IEEE802.11a				
Mode	OFDM				
Channel	CH36 to CH165				
Data rate (MCS index)	6, 9, 12, 18, 24, 36, 48, 54Mbps				
TX Characteristics	Min.	Typ.	Max.	Unit	
1. Power Levels (Calibrated)					
1) For antenna port	13	15	17	dBm	
2. Spectrum Mask @target power					
1) at fc +/-11MHz	-	-	-20	dBr	
2) at fc +/-20MHz	-	-	-28	dBr	
3) at fc > +/-30MHz	-	-	-40	dBr	
3. Constellation Error(EVM)@ target power					
1) 6Mbps	-	-	-5	dB	
2) 9Mbps	-	-	-8	dB	
3) 12Mbps	-	-	-10	dB	
4) 18Mbps	-	-	-13	dB	
5) 24Mbps	-	-	-16	dB	
6) 36Mbps	-	-	-19	dB	
7) 48Mbps	-	-	-22	dB	
8) 54Mbps	-	-	-25	dB	
4 Frequency Error	-20	-	20	ppm	
RX Characteristics	Min.	Typ.	Max.	Unit	
5 Minimum Input Level Sensitivity (each chain)					
1) 6Mbps (PER ≦10%)	-	-	-82	dBm	
2) 9Mbps (PER ≦10%)	-	-	-81	dBm	
3) 12Mbps (PER ≦10%)	-	-	-79	dBm	
4) 18Mbps (PER ≦10%)	-	-	-77	dBm	
5) 24Mbps (PER ≦10%)	-	-	-74	dBm	
6) 36Mbps (PER ≦10%)	-	-	-70	dBm	
7) 48Mbps (PER ≦10%)	-	-	-66	dBm	
8) 54Mbps (PER ≦10%)	-	-	-65	dBm	
6. Maximum Input Level (PER ≦10%)	-30	-	-	dBm	

版权 CVTE 所有，本文档内容属商业机密。未经允许，任何组织或个人不得以任何形式复制和传播。

9.6 IEEE 802.11n HT20 Section(5GHz)

Items	Contents				
Specification	IEEE802.11n HT20 @ 5GHz				
Mode	BPSK, QPSK, 16QAM, 64QAM and OFDM				
Channel	CH36 to CH165				
Data rate (MCS index)	MCS0/1/2/3/4/5/6/7				
TX Characteristics	Min.	Typ.	Max.	Unit	
1. Power Levels (Calibrated)					
1) For antenna port	12	14	16	dBm	
2. Spectrum Mask @target power					
1) at fc +/-11MHz	-	-	-20	dBr	
2) at fc +/-20MHz	-	-	-28	dBr	
3) at fc > +/-30MHz	-	-	-45	dBr	
3. Constellation Error(EVM)@ target power					
1) MCS0	-	-	-5	dB	
2) MCS1	-	-	-10	dB	
3) MCS2	-	-	-13	dB	
4) MCS3	-	-	-16	dB	
5) MCS4	-	-	-19	dB	
6) MCS5	-	-	-22	dB	
7) MCS6	-	-	-25	dB	
8) MCS7	-	-	-28	dB	
4. Frequency Error	-20	-	20	ppm	
RX Characteristics	Min.	Typ.	Max.	Unit	
6. Minimum Input Level Sensitivity (each chain)					
1) MCS0 (PER ≦10%)	-	-	-82	dBm	
2) MCS1 (PER ≦10%)	-	-	-79	dBm	
3) MCS2 (PER ≦10%)	-	-	-77	dBm	
4) MCS3 (PER ≦10%)	-	-	-74	dBm	
5) MCS4 (PER ≦10%)	-	-	-70	dBm	
6) MCS5 (PER ≦10%)	-	-	-66	dBm	
7) MCS6 (PER ≦10%)	-	-	-65	dBm	
8) MCS7 (PER ≦10%)	-	-	-64	dBm	
6. Maximum Input Level (PER ≦10%)	-30	-	-	dBm	

9.7 IEEE 802.11n HT40 Section(5GHz)

Items	Contents
Specification	IEEE802.11n HT40 @ 5GHz

版权 CVTE 所有，本文档内容属商业机密。未经允许，任何组织或个人不得以任何形式复制和传播。

Mode	BPSK, QPSK, 16QAM, 64QAM and OFDM				
Channel	CH38 to CH163				
Data rate (MCS index)	MCS0/1/2/3/4/5/6/7				
TX Characteristics	Min.	Typ.	Max.	Unit	
1. Power Levels (Calibrated)					
1) For antenna port	11	13	15	dBm	
2. Spectrum Mask @target power					
1) at fc +/-21MHz	-	-	-20	dBr	
2) at fc +/-40MHz	-	-	-28	dBr	
3) at fc > +/-60MHz	-	-	-45	dBr	
3. Constellation Error(EVM)@ target power					
1) MCS0	-	-	-5	dB	
2) MCS1	-	-	-10	dB	
3) MCS2	-	-	-13	dB	
4) MCS3	-	-	-16	dB	
5) MCS4	-	-	-19	dB	
6) MCS5	-	-	-22	dB	
7) MCS6	-	-	-25	dB	
8) MCS7	-	-	-28	dB	
4. Frequency Error	-20	-	20	ppm	
RX Characteristics	Min.	Typ.	Max.	Unit	
7. Minimum Input Level Sensitivity (each chain)					
1) MCS0 (PER ≦10%)	-	-	-79	dBm	
2) MCS1 (PER ≦10%)	-	-	-76	dBm	
3) MCS2 (PER ≦10%)	-	-	-74	dBm	
4) MCS3 (PER ≦10%)	-	-	-71	dBm	
5) MCS4 (PER ≦10%)	-	-	-67	dBm	
6) MCS5 (PER ≦10%)	-	-	-63	dBm	
7) MCS6 (PER ≦10%)	-	-	-62	dBm	
8) MCS7 (PER ≦10%)	-	-	-61	dBm	
6. Maximum Input Level (PER ≦10%)	-30	-	-	dBm	

9.8 IEEE 802.11ac Section(5GHz)

Items	Contents
Specification	IEEE802.11ac
Mode	BPSK, QPSK, 16QAM, 64QAM ,256QAM and OFDM
Channel	CH36 to CH165 VHT20 CH38 to CH163 VHT40 CH42 to CH157 VHT80
Data rate (MCS index)	MCS0/1/2/3/4/5/6/7/8/9

版权 CVTE 所有，本文档内容属商业机密。未经允许，任何组织或个人不得以任何形式复制和传播。

	Min.	Typ.	Max.			Unit	Remark
TX Characteristics	Min.	Typ.	Max.			Unit	
1. Power Levels (Calibrated)							
1) For antenna port	11	13	15			dBm	
2. Spectrum Mask @VHT20/VHT40/VHT80 target power							
1) at fc +/-11MHz/21MHz/41MHz	-	-	-20			dBr	
2) at fc +/-20MHz/40MHz/80MHz	-	-	-28			dBr	
3) at fc +/-30MHz/60MHz/120MHz	-	-	-40			dBr	
3. Constellation Error(EVM)@ target power							
1) MCS0	-	-	-5			dB	
2) MCS1	-	-	-10			dB	
3) MCS2	-	-	-13			dB	
4) MCS3	-	-	-16			dB	
5) MCS4	-	-	-19			dB	
6) MCS5	-	-	-22			dB	
7) MCS6	-	-	-25			dB	
8) MCS7	-	-	-27			dB	
9) MCS8	-	-	-30			dB	
10) MCS9	-	-	-32			dB	
4. Frequency Error	-20	-	20			ppm	
RX Characteristics	Min.	Typ.	Max.			Unit	
5.Minimum Input Level Sensitivity (each chain)			VHT 20	VHT 40	VHT 80		
1) MCS0 (PER ≤10%)	-	-	-82	-79	-76	dBm	
2) MCS1 (PER ≤10%)	-	-	-79	-76	-73	dBm	
3) MCS2 (PER ≤10%)	-	-	-77	-74	-71	dBm	
4) MCS3 (PER ≤10%)	-	-	-74	-71	-68	dBm	
5) MCS4 (PER ≤10%)	-	-	-70	-67	-64	dBm	
6) MCS5 (PER ≤10%)	-	-	-66	-63	-60	dBm	
7) MCS6 (PER ≤10%)	-	-	-65	-62	-59	dBm	
8) MCS7 (PER ≤10%)	-	-	-64	-61	-58	dBm	
9) MCS8(PER ≤10%)	-	-	-59	-56	-53	dBm	
10) MCS9(PER ≤10%)	-	-	-57	-54	-51	dBm	
6. Maximum Input Level (PER ≤10%)	-30	-	-			dBm	

9.9 Bluetooth Section

Items	Contents
Specification	BT2.1+EDR/4.2/5.1
Mode	FHSS,GFSK,DPSK,DQPSK

版权 CVTE 所有，本文档内容属商业机密。未经允许，任何组织或个人不得以任何形式复制和传播。

Number of Channel	79 Channels				
Frequency Band	2.402 GHz ~2.480GHz				
	Min.	Typ.	Max.	Unit	Remark
1. Output Power		4	-	dBm	
2. Gain step	2	4	8	dB	
3. Receiver sensitivity					
1). Enhanced data rate receiver specifications (BER ≦0.1%)	-	-86.5	-80	dBm	
2). Basic rate receiver specifications (BER ≦0.1%)	-	-93.5	-80	dBm	
3). Bluetooth LE receiver specifications (PER < 30.8%)	-	-93.5	-80	dBm	
4. Maximum usable signal (BER ≦0.1%)	-	-5	-		
5. C/I co-channel (BER<0.1%)	-	4	11	dB	
6. C/I 1MHz (BER<0.1%)	-	-14	0	dB	
7. C/I 2MHz (BER<0.1%)	-	-42	-30	dB	
8. C/I≥3MHz (BER<0.1%)	-	-49	-40	dB	
9. C/I Image channel (BER<0.1%)	-	-25	-9	dB	
10. C/I Image 1MHz (BER<0.1%)	-	-50	-20	dB	
11. Inter-modulation	-	-13	-	dB	
12. Out-of-band blocking					
1). 30MHz to 2000MHz	-10	-	-	dBm	
2). 2000MHz to 2399MHz	-27	-	-	dBm	
3). 2498MHz to 3000MHz	-27	-	-	dBm	
4). 3000MHz to 12.75GHz	-10	-	-	dBm	
13. Modulation characteristics					
1). Δf1avg	140	157	175	KHz	
2). Δf2max (For at least 99.9% of all Δf2max)	115	140	-	KHz	
3). Δf1avg /Δf2avg	0.8	0.98	-	KHz	
14. ICFT	-75	±20	+75	KHz	
15. Carrier frequency drift					
1). One slot packet (DH1)	-25	±15	+25	KHz	
2). Two slot packet (DH3)	-40	±15	+40	KHz	
3). Five slot packet (DH5)	-40	±15	+40	KHz	
4). Max drift rate	-	6	20	KHz/50us	
16. TX output spectrum(20dB bandwidth)	-	922	1000	KHz	
17. In-Band spurious emission					
1). ±2MHz offset	-	-45	-20	dBm	
2). ±3MHz offset	-	-48	-40	dBm	
3). >±3MHz offset	-	-48	-40	dBm	

版权 CVTE 所有，本文档内容属商业机密。未经允许，任何组织或个人不得以任何形式复制和传播。

10. Reference Design（参考设计）

10.1 Timing specification（时序规范）

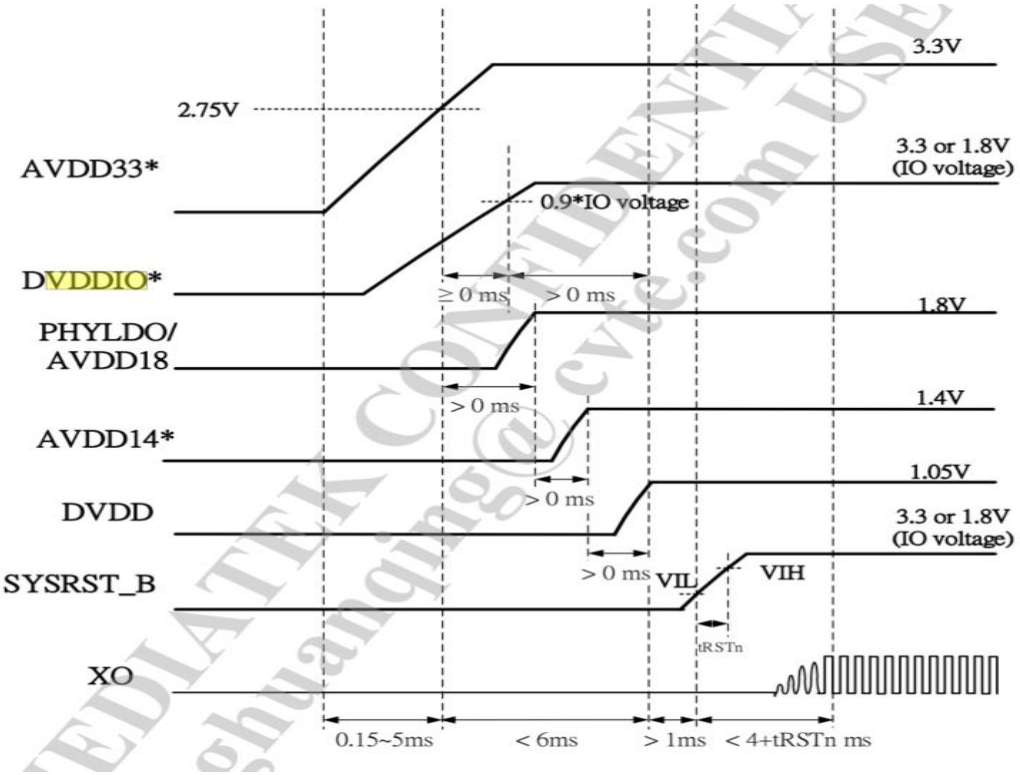

注：模组时序，只需关注 **3V3/RESET** 时序，满足 **AVDD33*/SYSRST_B**

10.2 DC Electrical Characteristics（直流电气特性）

Symbol	Description	conditions	Min.	Typ.	Max.	Unit
VDD33	Power supplies	-	3.0	3.3	3.6	V
VDDIO	I/O input power supplies	-	3.0	3.3	3.6	V
I_{VDD33}	Power supply current	-	-	-	700	mA
V_{IH}	High-level input voltage	VDD33=3.3V	VDD33*0.625	-	VDD33+0.3	V
V_{IL}	Low-level input voltage	VDD33=3.3V	-0.3	-	VDD33*0.25	V
V_{OH}	High-level output voltage	VDD33=3.3V	VDD33-0.4	-	VDD33+0.3	V
V_{OL}	Low-level output voltage	VDD33=3.3V	-0.3	-	0.4	V
R_{PU}	Internal pull-up resistor	VDD33=3.3V	-	10	-	kΩ
R_{PD}	Internal pull-down resistor	VDD33=3.3V	40	75	190	kΩ

版权 CVTE 所有，本文档内容属商业机密。未经允许，任何组织或个人不得以任何形式复制和传播。

10.3 Reference schematic（参考原理图）

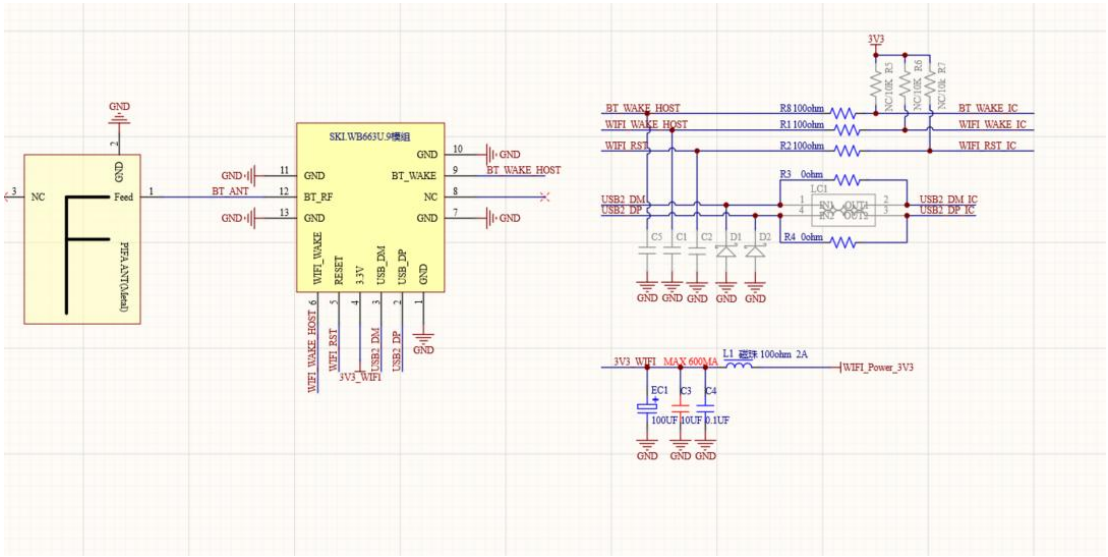

设计注意事项：

1.BT_WAKE_HOST/WIFI_WAKE_HOSTWIFI_RST 内部上拉 10K,外部兼容 10K 上拉，根据走线选择上件。

2.USB2_DM/USB2_DP USB2.0 接口模组内部阻抗控 90Ω。

3.电容 C1/C2/C5/ TVS D1/D2 兼容设计

4.电源电路 L1/EC1/C3/C4 可根据实际纹波情况上件，双天线 MIMO 发射，电流较大。

5. 引脚 PIN10 到 PIN11 上方天线净空区禁止走线，天线底下禁止铺地。

版权 CVTE 所有，本文档内容属商业机密。未经允许，任何组织或个人不得以任何形式复制和传播。

11. Mechanical,Environmental and Reliability Tests

（机械、环境和可靠性测试）

Test Items		Test Conditions	Qty	Criteria Condition
11-1	**Drop test**	The packed samples was tested at below condition: Drop height: 760mm(0.5~9.5kg) 610mm(9.5~18.5kg) Drop time: 1x corner, 3x edge and 6x face.	1xBox	After test, the outer box and inner box will not been broken by appearance visual inspection, and the products should be ok.
11-2	**Vibration test**	X-Y-Z direction, first Frequency changing from 10Hz to 30Hz to 10Hz,amplitude 2.0mm, 5 times vibrations, 5x times vibration.	1xBox	After test, the outer box and inner box will not been broken by appearance visual inspection and the products should be ok.
11-3	**Soldering ability test (Only for SKI module)**	Soldering temperature: 245±5℃ Soldering duration: 3±0.5S	3	1.After soldering, the soldered area must be covered by a smooth bright solder layer, some deficiencies such as a small amount of the pinhole, not wetting are allowed, but the deficiencies can not be in the same place; 2. At least 90% of soldered area shall be covered continuously by the soldering material.
11-4	**High Temperature and Humidity Operation Test**	Leave samples in 60℃, 90% RH @ 24 hours	4	After test, the products appearance, power, EVM and frequency error functional parameter shall be satisfied with the test specification.
11-5	**Low Temperature Operation Test**	Leave samples in -15℃ @24 hours	4	After test, the products appearance, power, EVM and frequency error functional parameter shall be satisfied with the test specification.
11-6	**High Temperature and Humidity Start Test**	Leave samples in 60℃, 90% RH for 4x hours	4	After test, power on and off the samples for 3x tiems, the samples should be able to start normally

版权 CVTE 所有，本文档内容属商业机密。未经允许，任何组织或个人不得以任何形式复制和传播。

11-7	**Low temperature start test**	Leave samples in -15℃ for 4x hours	4	After test, power on and off the samples for 3x tiems, the samples should be able to start normally
11-8	**High Temperature and Humidity Storage Test**	Leave samples in 85℃, 95% RH @ 48 hours	4	After test, the products appearance, power, EVM and frequency error functional parameter shall be satisfied with the test specification.
11-9	**Low Temperature Storage Test**	Leave samples in -40℃, @48 hours	4	After test, the products appearance, power, EVM and frequency error functional parameter shall be satisfied with the test specification.
11-10	**Thermal Shock Test**	-40~85℃，dwell time：30min，50cycles	4	After test, the products appearance, power, EVM and frequency error functional parameter shall be satisfied with the test specification.
11-11	**Aging Test**	60℃，120Hrs	10	The products at high temperature for a long time can continuous work normally
11-12	**Salt spray test**	NSS,35C,PH:6.5~7.2，24H	2	The Sample shall has no minor or major defects, such as physical damage, crack, corrosion, deformation etc;
11-13	**ESD**	Discharge voltage: 1kV C: 50pF Discharge resistance：330Ω Positive10 times 1 time for each second	3	The products can recoverable smoothly after ESD test.

版权 CVTE 所有，本文档内容属商业机密。未经允许，任何组织或个人不得以任何形式复制和传播。

12. Package（包装）

（1）编带尺寸及方向：

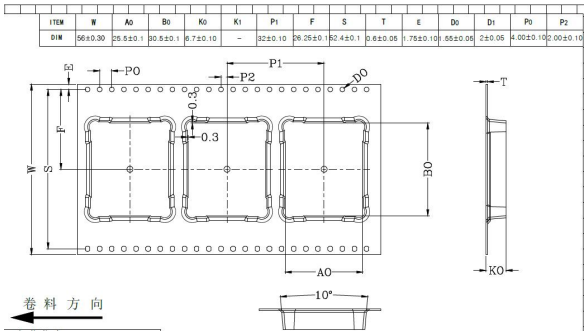

ITEM	W	A0	B0	K0	K1	P1	F	S	T	E	D0	D1	P0	P2
DIM	56±0.30	25.5±0.1	30.5±0.1	6.7±0.10	-	32±0.10	26.25±0.1	52.4±0.1	0.6±0.05	1.75±0.10	1.55±0.05	2±0.05	4.00±0.10	2.00±0.10

（2）编带方向

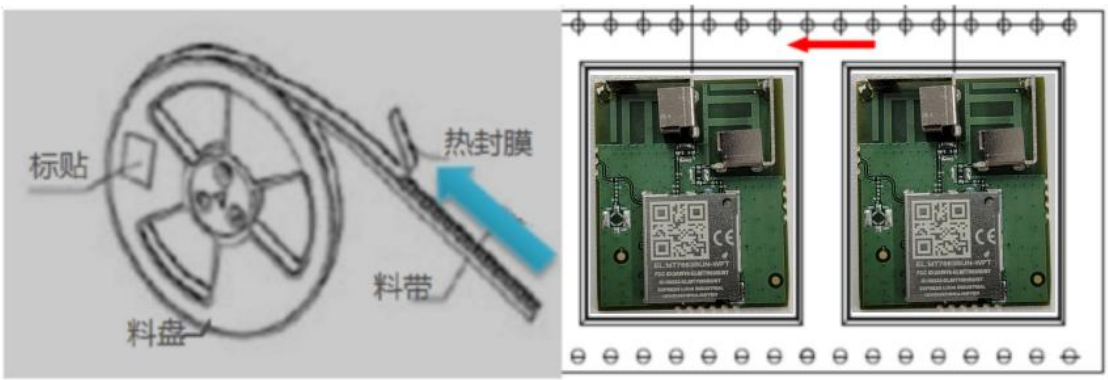

（3）包装数量：

每卷包装数量	280pcs	每箱包装数量	1680pcs

（4）外箱尺寸

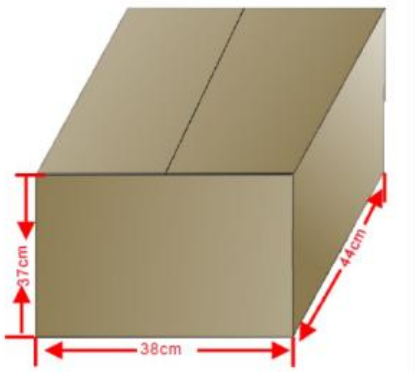

版权 CVTE 所有，本文档内容属商业机密。未经允许，任何组织或个人不得以任何形式复制和传播。

13. Storage and Production（存储、生产）

13.1 Storage requirements（存储要求）

本产品的湿敏特性为 4 级（MSL4），出厂时以真空密封袋包装。产品搬运、存储、加工过程必须遵循 IPC/JEDEC J-STD-033。在环境温度低于 40 摄氏度，空气湿度小于 90%的情况下，真空包装下产品可存放 12 个月。在产品存放有效期内，如发现真空包装有漏气、湿敏卡变色达到烘烤标准、开封暴露时间超过 72H，需要烘烤后使用。

13.2 Production parameters（生产参数）

炉温最高不能超过 250℃，推荐是 240℃。
推荐 SMT 焊炉温曲线如下图所示。

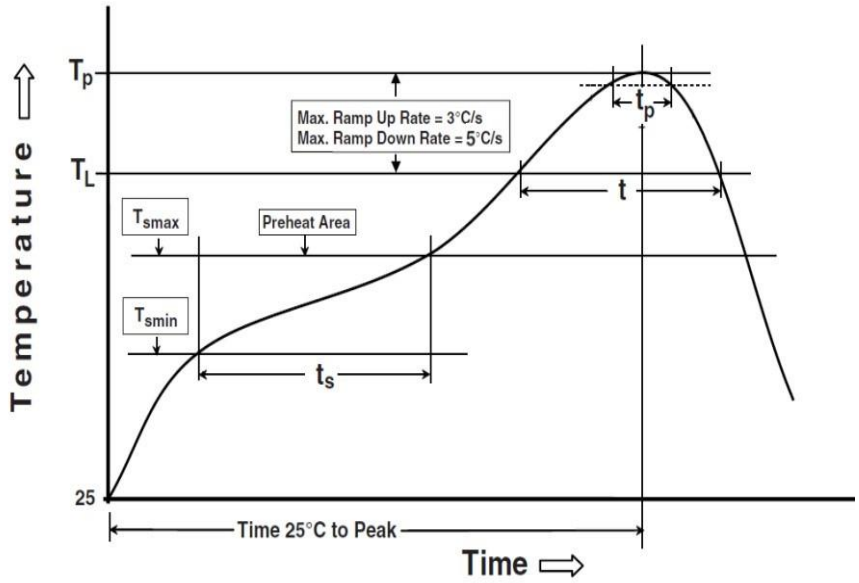

图 13-1 炉温曲线推荐图

炉温参数	最小值	典型值	最大值	单位
预热区最低温度 Tsmin	150			℃
预热区最高温度 Tsmax			200	℃
预热上升时间 ts	80		120	s
回流焊区升温速率(TL 到 Tp）			3	℃/s
回流焊区低温 TL		220		℃
回流焊区峰值温度 Tp	235	240	250	℃
回流焊峰值温度时间 tp(Tp 波动 5℃范围）			30	s
回流焊区冷却降温速率（Tp 到 TL）	-5	-3	-1	℃/s
回流时间 t	40		60	s

表 13-2 炉温曲线参数

版权 CVTE 所有，本文档内容属商业机密。未经允许，任何组织或个人不得以任何形式复制和传播。

FCC Statement:

This device complies with Part 15 of the FCC Rules. Operation is subject to the following two conditions:
(1) This device may not cause harmful interference, and
(2) this device must accept any interference received, including interference that may cause undesired operation.

This equipment has been tested and found to comply with the limits for a Class B digital device, pursuant to Part 15 of the FCC Rules. These limits are designed to provide reasonable protection against harmful interference in a residential installation. This equipment generates, uses and can radiate radio frequency energy and, if not installed and used in accordance with the instructions, may cause harmful interference to radio communications. However, there is no guarantee that interference will not occur in a particular installation. If this equipment does cause harmful interference to radio or television reception, which can be determined by turning the equipment off and on, the user is encouraged to try to correct the interference by one of the following measures:

- Reorient or relocate the receiving antenna.
- Increase the separation between the equipment and receiver.
- Connect the equipment into an outlet on a circuit different from that to which the receiver is connected.
- Consult the dealer or an experienced radio/TV technician for help.

FCC Caution: Any changes or modifications not expressly approved by the party responsible for compliance could void the user's authority to operate this equipment. This transmitter must not be co-located or operating in conjunction with any other antenna or transmitter.

List of applicable FCC rules

This module has been tested and found to comply with part 15, part 2 requirements for Modular Approval.

Antenna Placement Within the Host Platform

The module is tested for standalone mobile RF exposure use condition.
(1) The antenna must be installed such that 20 cm is maintained between the antenna and users,
(2) The transmitter module may not be co-located with any other transmitter or antenna.
In the event that these conditions cannot be met (for example certain laptop configurations or co-location with another transmitter), then the FCC authorization is no longer considered valid and the FCC ID cannot be used on the final product. In these circumstances, the OEM integrator will be responsible for re-evaluating the end product (including the transmitter) and obtaining a separate FCC authorization.

RF exposure considerations

This equipment complies with FCC radiation exposure limits set forth for an uncontrolled environment. This equipment should be installed and operated with minimum distance 20cm between the radiator & your body.

Antenna Type and Gain

The following antennas have been certified for use with this module.
Only antennas of the same type with equal or lower gain may also be used with this module. Other types of antennas and/or higher gain antennas may require the additional authorization for operation.
Antenna Specification list below:

Antenna Type	Frequency Bands	Max. Antenna Gain (dBi)
FPC (BT)	2.4GHz	5.85
Shrapnel (WiFi)	5GHz	4.56
Shrapnel (WiFi)	2.4GHz	4.13

End Product Labeling

When the module is installed in the host device, the FCC ID label must be visible through a window on the final device or it must be visible when an access panel, door or cover is easily re-moved. If not, a second label must be placed on the outside of the final device that contains the following text: "Contains FCC ID: 2AR82-SKIWB663U17". The FCC ID can be used only when all FCC compliance requirements are met.
The end product shall bear the following 15.19 statement: This device complies with part 15 of the FCC Rules. Operation is subject to the following two conditions:

(1) This device may not cause harmful interference, and

(2) This device must accept any interference received, including interference that may cause undesired operation.

Information on test modes and additional testing requirements

This transmitter is tested in a standalone mobile RF exposure condition and any co-located or simultaneous transmission with other transmitter(s) class II permissive change re-evaluation or new certification.

Part 15 Subpart B disclaimer

This transmitter module is tested as a subsystem and its certification does not cover the FCC Part 15 Subpart B rule requirement applicable to the final host. The final host will still need to be reassessed for compliance to this portion of rule requirements if applicable.

As long as all conditions above are met, further transmitter test will not be required. However, the OEM integrator is still responsible for testing their end-product for any additional compliance requirements required with this module installed.

Important Note

In the event that these conditions can not be met (for example certain laptop configurations or co-location with another transmitter), then the FCC authorization is no longer considered

valid and the FCC ID can not be used on the final product. In these circumstances, the OEM integrator will be responsible for reevaluating the end product (including the transmitter) and obtaining a separate FCC authorization.

Manual Information to the End User

The OEM integrator has to be aware not to provide information to the end user regarding how to install or remove this RF module in the user's manual of the end product which integrates this module.

The host integrator must follow the integration instructions provided in this document and ensure that the composite-system end product complies with the requirements by a technical assessment or evaluation to the rules and to KDB Publication 996369.

The host integrator installing this module into their product must ensure that the final composite product complies with the requirements by a technical assessment or evaluation to the rules, including the transmitter operation and should refer to guidance in KDB 996369.

OEM/Host manufacturer responsibilities

OEM/Host manufacturers are ultimately responsible for the compliance of the Host and Module. The final product must be reassessed against all the essential requirements of the FCC rule such as FCC Part 15 Subpart B before it can be placed on the US market. This includes reassessing the transmitter module for compliance with the Radio and EMF essential requirements of the FCC rules. This module must not be incorporated into any other device or system without retesting for compliance as multi-radio and combined equipment

ISED Statement:

This Class B digital apparatus complies with Canadian ICES-003.

Cet appareil numérique de classe B est conforme à la norme canadienne ICES-003.

This device complies with Innovation, Science and Economic Development Canada's licence-exempt RSS standard(s).

Operation is subject to the following two conditions:

1) This device may not cause interference, and
2) This device must accept any interference, including interference that may cause undesired operation of the device.

Le présent appareil est conforme aux CNR d'Industrie Canada applicables auxappareils radio exempts de licence.

L'exploitation est autorisée aux deux conditions suivantes:

1) l'appareil ne doit pas produire de brouillage, et
2) l'utilisateur de l'appareil doit accepter tout brouillage adioélectrique subi, même si le brouillage est susceptible d'en compromettre le fonctionnement.

RF Radiation Exposure Statement

This equipment complies with ISED radiation exposure limits set forth for an uncontrolled environment. This equipment should be installed and operated with a minimum distance of 20 centimeters between the radiator and your body.

Operation in the band 5150-5250 MHz is only for indoor use to reduce the potential for harmful interference to co-channel mobile satellite systems.

Déclaration d'exposition aux radiations

Cet appareil est conforme aux limites d'exposition aux rayonnements définies pour un environnement non contrôlé. Cet équipement doit être installé et utilisé à une distance minimale de XX centimètres entre le radiateur et votre corps.

Le fonctionnement dans la bande 5150-5250 MHz est uniquement destiné à une utilisation en intérieur afin *de réduire le potentiel d'interférences nuisibles aux systèmes mobiles par satellite dans le même canal.*

IMPORTANT NOTE

In the event that these conditions can not be met (for example certain laptop configurations or co-location with another transmitter), then the Canada authorization is no longer considered valid and the IC can not be used on the final product. In these circumstances, the OEM integrator will be responsible for re-evaluating the end product (including the transmitter) and obtaining a separate Canada authorization.

NOTE IMPORTANTE

Dans le cas où ces conditions ne peuvent être satisfaites (par exemple pour certaines configurations d'ordinateur portable ou de certaines co-localisation avec un autre émetteur), l'autorisation du Canada n'est plus considéré comme valide et IC ne peut pas être utilisé sur le produit final. Dans ces circonstances, l'intégrateur OEM sera chargé de réévaluer le produit final (y compris l'émetteur) et l'obtention d'une autorisation distincte au Canada.

Required end product labeling

This transmitter module is authorized only for use in device where the antenna may be installed and operated with greater than 20cm between the antenna and users. The final end product must be labeled in a visible area with the following: "Contains IC: 24728-SKIWB663U17".

Plaque signalétique du produit final

Ce module émetteur est autorisé uniquement pour une utilisation dans un appareil où l'antenne peut être installée et utilisée à plus de 20 cm entre l'antenne et les utilisateurs. Le produit final doit être étiqueté dans un endroit visible avec l'inscription suivante: "Contient des IC: 24728-SKIWB663U17".

Manual Information To the End User

The OEM integrator has to be aware not to provide information to the end user regarding how to install or remove this RF module in the user's manual of the end product which integrates this module.

The end user manual shall include all required regulatory information/warning as show in this manual.

The following text, or an equivalent notice, that shall be displayed in a conspicuous location, either in the user manual or on the device, or both:

This device contains licence-exempt transmitter(s)/receiver(s) that comply with Innovation, Science and Economic Development Canada's licence-exempt RSS(s). Operation is subject to the following two conditions:

1) This device may not cause interference.
2) This device must accept any interference, including interference that may cause undesired operation of the device.

Manuel d'information à l'utilisateur final

L'intégrateur OEM doit être conscient de ne pas fournir des informations à l'utilisateur final quant à la façon d'installer ou de supprimer ce module RF dans le manuel de l'utilisateur du produit final qui intègre ce module.

Le manuel de l'utilisateur final doit inclure toutes les informations réglementaires requises et avertissements comme indiqué dans ce manuel.

l'énoncé qui suit, ou l'équivalent, à un endroit bien en vue dans le manuel d'utilisation ou sur l'appareil, ou encore aux deux endroits :

L'émetteur/récepteur exempt de licence contenu dans le présent appareil est conforme aux CNR d'Innovation, Sciences et Développement économique Canada applicables aux appareils radio exempts de licence. L'exploitation est autorisée aux deux conditions suivantes :

1. *L'appareil ne doit pas produire de brouillage;*
2. *L'appareil doit accepter toute interférence, y compris toute interférence pouvant entraîner un fonctionnement indésirable du dispositif.*

Antennas

The following antennas have been certified for use with this module; antennas of the same type with equal or lower gain may also be used with this module. The antenna must be installed such that 20 cm can be maintained between the antenna and users.

This radio transmitter has been approved by Innovation, Science and Economic Development Canada to operate with the antenna types listed below, with the maximum permissible gain indicated. Antenna types not included in this list that have a gain greater than the maximum gain indicated for any type listed are strictly prohibited for use with this device.

Antenna Specification list below:

Antenna Type	Frequency Bands	Max. Antenna Gain (dBi)
FPC (BT)	2.4GHz	5.85
Shrapnel (WiFi)	5GHz	4.56
Shrapnel (WiFi)	2.4GHz	4.13

ANTENNE

Les antennes suivantes ont été certifiées pour une utilisation avec ce module; des antennes du même type à gain égal ou inférieur peuvent également être utilisées avec ce module. L'antenne doit être installée de telle sorte que 20 cm puissent être maintenus entre l'antenne et les utilisateurs.

Cet émetteur radio a été approuvé par Innovation, Sciences et Développement économique Canada pour fonctionner avec les types d'antenne énumérés ci-dessous, avec le gain maximal autorisé indiqué. Les types d'antenne non inclus dans cette liste qui ont un gain supérieur au gain maximum indiqué pour tout type répertorié sont strictement interdits pour l'utilisation avec cet appareil.