保密等级：机密

SPECIFICATION

产品规格书

SKO.W603.6

IEEE 802.11b/g/n 2T2R USB Wi-Fi Module

Approved by Shikun		
Checked by 审核	Rechecked by 复审	Approved by 批准
陈铭	吴世天	

Please send the original back to us after you have approved and signed.
客户承认签章后敬请寄回正本一份。

Approved by customer		
Comments 确认意见	Approved by 批准签字	Company's seal 盖章
Customer's Name:		

版权 CVTE 所有，本文档内容属商业机密。未经允许，任何组织或个人不得以任何形式复制和传播。

REVISION HISTORY

VERSION	DATE	BOARD ID	PAGE	DESCRIPTION	AUTHOR
V0	2020.07.10	SKO.W603.6 A20233		First Issued.	Lee
V4	2022.08.16	SKO.W603.6 B20332	3	Modify the product pictures .	Lee

版权 CVTE 所有，本文档内容属商业机密。未经允许，任何组织或个人不得以任何形式复制和传播。

Content

1. Introduction（简介）.....1

2. FEATURES（特性）.....1

3. Block Diagram（结构框图）.....2

4. Package Outline and Mounting（外形及安装尺寸）.....2

5. Product Pictures（实物图片）.....3

6. Key Materials（关键物料）.....4

7. General Requirements（一般要求）.....4

8. Electrical Characteristics（电气特性）.....4

8.1 IEEE 802.11b Section.....5

8.2 IEEE 802.11g Section.....5

8.3 IEEE 802.11n HT20 Section(2.4GHz).....6

8.4 IEEE 802.11n HT40 Section(2.4GHz).....7

9. Mechanical,Environmental and Reliability Tests（机械、环境和可靠性测试）.....9

10. Package（包装）.....11

11. Socket Specification（插座规格）.....12

版权 CVTE 所有，本文档内容属商业机密。未经允许，任何组织或个人不得以任何形式复制和传播。

1. Introduction（简介）

SKO.W603.6_02 module is based on MEDIATEK MT7603U solution. The MT7603U is a highly integrated Wi-Fi single chip which supports 300 Mbps PHY rate. It fully complies with IEEE 802.11n and IEEE 802.11 b/g standards, offering feature-rich wireless connectivity at high standards, and delivering reliable, cost-effective throughput from an extended distance. This documentation describes the engineering requirements specification.

SKO.W603.6_02 模块基于 MEDIATEK MT7603U 解决方案。MT7603U 是一款高度集成的 Wi-Fi 芯片，支持 300 Mbps 的物理速率。方案符合 IEEE 802.11n 和 IEEE 802.11 b/g 标准，以高标准提供功能丰富的无线连接，并在远距离提供可靠、经济高效的吞吐量。本文件描述了工程需求规范。

2. FEATURES（特性）

Reserving System 接收制式	IEEE Std. 802.11b
	IEEE Std. 802.11g
	IEEE Std. 802.11n
Chip Solution 芯片方案	MT7603U
Band 波段	2.4GHz
Dimensions 尺寸	57.0mm×30.0mm×3.2mm

型号	安装方式	支持标准	频段	天线接口	备注
SKO.W603.6_02	外挂 Ext-WIFI	IEEE 802.11b/g/n	2.4GHz	Ipex	57.0mm×30.0mm×3.2mm

版权 CVTE 所有，本文档内容属商业机密。未经允许，任何组织或个人不得以任何形式复制和传播。

3. Block Diagram（结构框图）

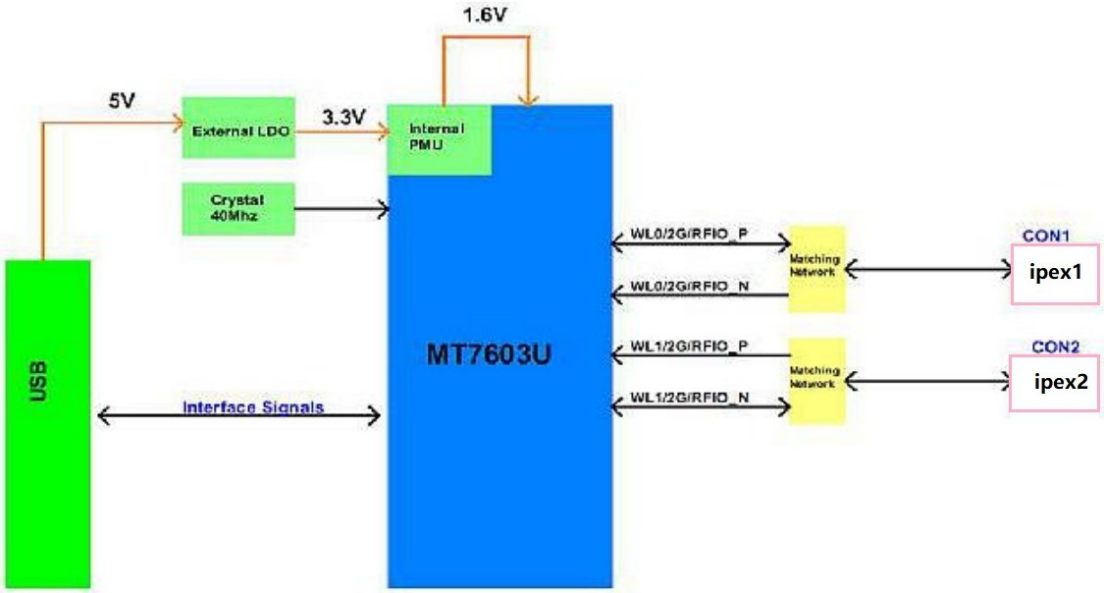

SKO.W603.6 Block Diagram

4. Package Outline and Mounting（外形及安装尺寸）

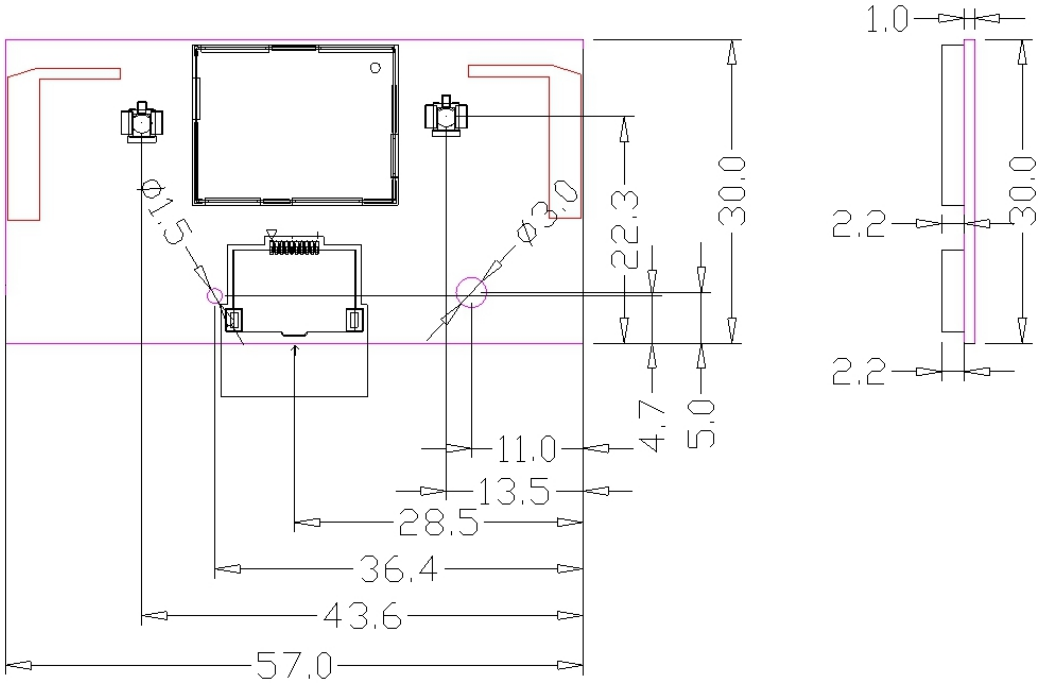

Note:1. The unit is mm.

2.The tolerance of the external dimensions of the module is ±0.2mm, and the tolerance of the board thickness and unmarked is ±0.2mm.

注意：1. 单位为 mm。

2.模组外形尺寸公差为±0.2mm，板厚及未标注公差为±0.2mm。

版权 CVTE 所有，本文档内容属商业机密。未经允许，任何组织或个人不得以任何形式复制和传播。

Pin Definition（引脚定义）

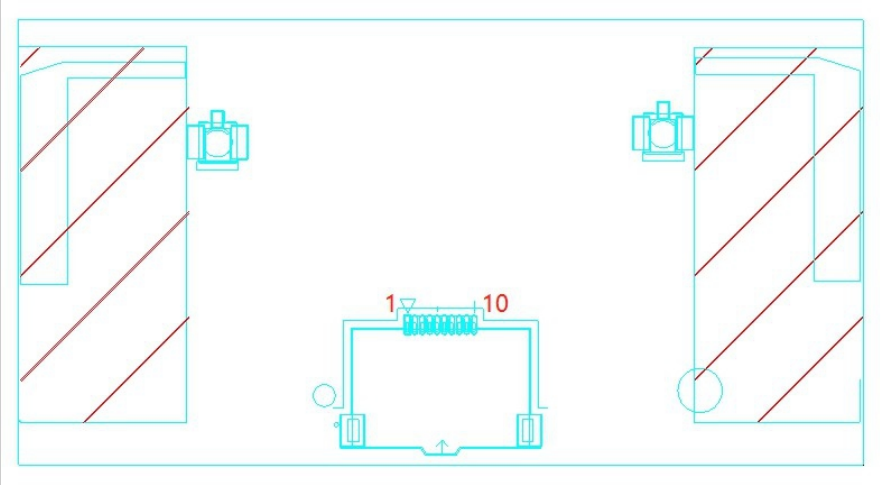

PIN	SYMBOL	DESCRIPTION
1	VDD_5V	VDD 5.0V \ +5.0V 直流供电输入
2	VDD_5V	VDD 5.0V \ +5.0V 直流供电输入
3	NC	NC \ 悬空
4	GND	Connected to Ground \ 连接到地
5	GND	Connected to Ground \ 连接到地
6	USB_DM	USB2.0 DM Signal \ USB2.0 差分负电压信号
7	USB_DP	USB2.0 DP Signal \ USB2.0 差分正电压信号
8	GND	Connected to Ground \ 连接到地
9	WoW	Wake on Wireless LAN \ 唤醒引脚 （低电平有效，内有 10K 电阻到 3.3V 上拉）
10	RESET	RESET \ 复位引脚 (低电平有效，内部接DCDC 芯片EN 脚)

5. Product Pictures（实物图片）

正视图（**top view**）

版权 CVTE 所有，本文档内容属商业机密。未经允许，任何组织或个人不得以任何形式复制和传播。

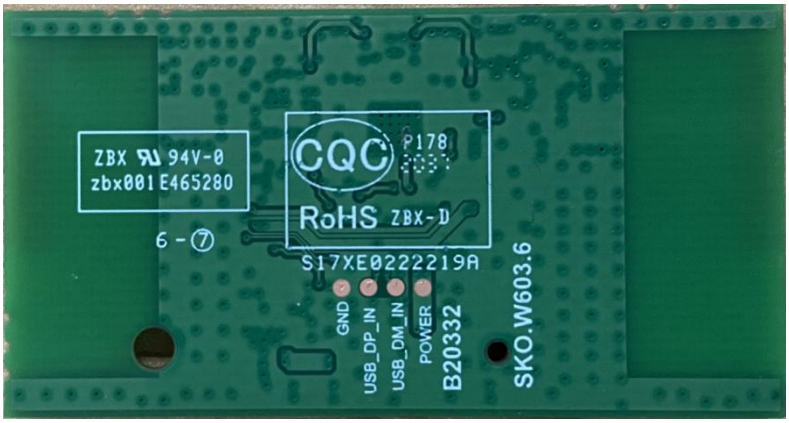

背视图（**bottom view**）

6. Key Materials（关键物料）

序号	关键件名称	型号	规格/材料	备注
1	集成电路	MT7603U	48-QFN	
2	PCB	SKO.W603.6	FR-4,2LAY	
3	晶体振荡器	无源晶振,SPXO,±10ppm,12pF,SMD3225	40MHz	

7. General Requirements（一般要求）

No.	Feature	Description
7-1	Operation Voltage 工作电压范围	5.0V+/-0.5
7-2	Current Consumption 最大电流	800mA
7-3	Ripple 纹波	≤250Vp-p
7-4	Operation Temperature 工作温度范围	0°C to +40°C
7-5	Antenna Type 天线类型	Internal antenna
7-6	USB	High Speed USB 2.0 Interface
7-7	Storage Temperature 存储温度	-40°C to +85°C

8. Electrical Characteristics（电气特性）

The Test for electrical specification was performed under the following condition unless otherwise specified.

Ambient condition Temperature :25℃ ± 5℃;

Power supply voltages：5.0V (±10%) input power at the Module.

除非另有说明，电气规范试验是在下列条件下进行的。

环境条件温度：25℃±5℃；电源电压：模块上输入电压 5.0V（±10%）

Note: The channel 12-13 would be disabled when module used in America and Canada.

版权 CVTE 所有，本文档内容属商业机密。未经允许，任何组织或个人不得以任何形式复制和传播。

8.1 IEEE 802.11b Section

Items	Contents				
Specification	IEEE802.11b				
Mode	DBPSK, DQPSK and CCK and DSSS				
Channel	CH1 to CH13				
TX Characteristics	Min.	Typ.	Max.	Unit	Remark
1. Power Levels(Calibrated)					
1) For Each antenna port	14	16	18	dBm	
2. Spectrum Mask @ target power					
1) fc +/-11MHz to +/-22MHz	-	-	-30	dBr	
2) fc > +/-22MHz	-	-	-50	dBr	
3 Constellation Error(EVM)@ target power					
1) 1Mbps	-	-	-10	dB	
2) 2Mbps	-	-	-10	dB	
3) 5.5Mbps	-	-	-10	dB	
4) 11Mbps	-	-	-10	dB	
4. Frequency Error	-20	-	20	ppm	
RX Characteristics	Min.	Typ.	Max.	Unit	
5 Minimum Input Level Sensitivity (each chain)					
1) 1Mbps (FER ≦8%)	-	-	-83	dBm	
2) 2Mbps (FER ≦8%)	-	-	-80	dBm	
3) 5.5Mbps (FER ≦8%)	-	-	-79	dBm	
4) 11Mbps (FER ≦8%)	-	-	-76	dBm	
6 Maximum Input Level (FER ≦8%)	-10	-	-	dBm	

8.2 IEEE 802.11g Section

Items	Contents				
Specification	IEEE802.11g				
Mode	BPSK, QPSK, 16QAM, 64QAM and OFDM				
Channel	CH1 to CH13				
TX Characteristics	Min.	Typ.	Max.	Unit	Remark
1. Power Levels					
1) For Each antenna port	12	14	16	dBm	
2. Spectrum Mask @ target power					
1) at fc +/-11MHz	-	-	-20	dBr	
2) at fc +/-20MHz	-	-	-28	dBr	
3) at fc > +/-30MHz	-	-	-40	dBr	
3 Constellation Error(EVM)@ target power					
1) 6Mbps	-	-	-5	dB	

版权 CVTE 所有，本文档内容属商业机密。未经允许，任何组织或个人不得以任何形式复制和传播。

2) 9Mbps	-	-	-8	dB	
3) 12Mbps	-	-	-10	dB	
4) 18Mbps	-	-	-13	dB	
5) 24Mbps	-	-	-16	dB	
6) 36Mbps	-	-	-19	dB	
7) 48Mbps	-	-	-22	dB	
8) 54Mbps	-	-	-25	dB	
4 Frequency Error	-20	-	20	ppm	
RX Characteristics	Min.	Typ.	Max.	Unit	
5 Minimum Input Level Sensitivity (each chain)					
1) 6Mbps (PER ≦10%)	-	-	-85	dBm	
2) 9Mbps (PER ≦10%)	-	-	-84	dBm	
3) 12Mbps (PER ≦10%)	-	-	-82	dBm	
4) 18Mbps (PER ≦10%)	-	-	-80	dBm	
5) 24Mbps (PER ≦10%)	-	-	-77	dBm	
6) 36Mbps (PER ≦10%)	-	-	-73	dBm	
7) 48Mbps (PER ≦10%)	-	-	-69	dBm	
8) 54Mbps (PER ≦10%)	-	-	-65	dBm	
6 Maximum Input Level (PER ≦10%)	-20	-	-	dBm	

8.3 IEEE 802.11n HT20 Section(2.4GHz)

Items	Contents				
Specification	EEE802.11n HT20 @ 2.4GHz				
Mode	BPSK, QPSK, 16QAM, 64QAM and OFDM				
Channel	CH1 to CH13				
TX Characteristics	Min.	Typ.	Max.	Unit	
1. Power Levels					
1) For Each antenna port	11	13	15	dBm	
2. Spectrum Mask @ target power					
1) at fc +/-11MHz	-	-	-20	dBr	
2) at fc +/-20MHz	-	-	-28	dBr	
3) at fc > +/-30MHz	-	-	-45	dBr	
3. Constellation Error(EVM)@ target power					
1) MCS0	-	-	-5	dB	
2) MCS1	-	-	-10	dB	
3) MCS2	-	-	-13	dB	
4) MCS3	-	-	-16	dB	
5) MCS4	-	-	-19	dB	
6) MCS5	-	-	-22	dB	
7) MCS6	-	-	-25	dB	
8) MCS7	-	-	-28	dB	

版权 CVTE 所有，本文档内容属商业机密。未经允许，任何组织或个人不得以任何形式复制和传播。

4. Frequency Error	-20	-	20	ppm	
RX Characteristics	Min.	Typ.	Max.	Unit	
5. Minimum Input Level Sensitivity (each chain)					
1) MCS0 (PER ≦10%)	-	-	-82	dBm	
2) MCS1 (PER ≦10%)	-	-	-79	dBm	
3) MCS2 (PER ≦10%)	-	-	-77	dBm	
4) MCS3 (PER ≦10%)	-	-	-74	dBm	
5) MCS4 (PER ≦10%)	-	-	-70	dBm	
6) MCS5 (PER ≦10%)	-	-	-66	dBm	
7) MCS6 (PER ≦10%)	-	-	-65	dBm	
8) MCS7 (PER ≦10%)	-	-	-64	dBm	
6. Maximum Input Level (PER ≦10%)	-20	-	-	dBm	

8.4 IEEE 802.11n HT40 Section(2.4GHz)

Items	Contents				
Specification	IEEE802.11n HT40 @ 2.4GHz				
Mode	BPSK, QPSK, 16QAM, 64QAM and OFDM				
Channel	CH3 to CH11				
	Min.	Typ.	Max.	Unit	Remark
TX Characteristics	Min.	Typ.	Max.	Unit	
1. Power Levels (Calibrated)					
1) For Each antenna port	11	13	15	dBm	
2. Spectrum Mask @target power					
1) at fc +/-22MHz	-	-	-20	dBr	
2) at fc +/-40MHz	-	-	-28	dBr	
3) at fc > +/-60MHz	-	-	-45	dBr	
3. Constellation Error(EVM)@ target power					
1) MCS0	-	-	-5	dB	
2) MCS1	-	-	-10	dB	
3) MCS2	-	-	-13	dB	
4) MCS3	-	-	-16	dB	
5) MCS4	-	-	-19	dB	
6) MCS5	-	-	-22	dB	
7) MCS6	-	-	-25	dB	
8) MCS7	-	-	-28	dB	
4. Frequency Error	-20	-	20	ppm	
RX Characteristics	Min.	Typ.	Max.	Unit	
5. Minimum Input Level Sensitivity (each chain)					
1) MCS0 (PER ≦10%)	-	-	-79	dBm	
2) MCS1 (PER ≦10%)	-	-	-76	dBm	

版权 CVTE 所有，本文档内容属商业机密。未经允许，任何组织或个人不得以任何形式复制和传播。

3) MCS2 (PER ≦10%)	-	-	-74	dBm	
4) MCS3 (PER ≦10%)	-	-	-71	dBm	
5) MCS4 (PER ≦10%)	-	-	-67	dBm	
6) MCS5 (PER ≦10%)	-	-	-63	dBm	
7) MCS6 (PER ≦10%)	-	-	-62	dBm	
8) MCS7 (PER ≦10%)	-	-	-61	dBm	
6. Maximum Input Level (PER ≦10%)	-20	-	-	dBm	

版权 CVTE 所有，本文档内容属商业机密。未经允许，任何组织或个人不得以任何形式复制和传播。

9. Mechanical,Environmental and Reliability Tests

（机械、环境和可靠性测试）

Test Items		Test Conditions	Qty	Criteria Condition
9-1	**Drop test**	The packed samples was tested at below condition: Drop height: 760mm(0.5~9.5kg) 610mm(9.5~18.5kg) Drop time: 1x corner, 3x edge and 6x face.	1xBox	After test, the outer box and inner box will not been broken by appearance visual inspection, and the products should be ok.
9-2	**Vibration test**	X-Y-Z direction, first Frequency changing from 10Hz to 30Hz to 10Hz,amplitude 2.0mm, 5 times vibrations, 5x times vibration.	1xBox	After test, the outer box and inner box will not been broken by appearance visual inspection and the products should be ok.
9-3	**Soldering ability test (Only for SKI module)**	Soldering temperature: 245±5℃ Soldering duration: 3±0.5S	3	1.After soldering, the soldered area must be covered by a smooth bright solder layer, some deficiencies such as a small amount of the pinhole, not wetting are allowed, but the deficiencies can not be in the same place; 2. At least 90% of soldered area shall be covered continuously by the soldering material.
9-4	**High Temperature and Humidity Operation Test**	Leave samples in 60℃, 90% RH @ 24 hours	4	After test, the products appearance, power, EVM and frequency error functional parameter shall be satisfied with the test specification.
9-5	**Low Temperature Operation Test**	Leave samples in -15℃ @24 hours	4	After test, the products appearance, power, EVM and frequency error functional parameter shall be satisfied with the test specification.
9-6	**High Temperature and Humidity Start Test**	Leave samples in 60℃, 90% RH for 4x hours	4	After test, power on and off the samples for 3x tiems, the samples should be able to start normally

版权 CVTE 所有，本文档内容属商业机密。未经允许，任何组织或个人不得以任何形式复制和传播。

9-7	**Low temperature start test**	Leave samples in -15℃ for 4x hours	4	After test, power on and off the samples for 3x tiems, the samples should be able to start normally
9-8	**High Temperature and Humidity Storage Test**	Leave samples in 85℃, 95% RH @ 48 hours	4	After test, the products appearance, power, EVM and frequency error functional parameter shall be satisfied with the test specification.
9-9	**Low Temperature Storage Test**	Leave samples in -40℃, @48 hours	4	After test, the products appearance, power, EVM and frequency error functional parameter shall be satisfied with the test specification.
9-10	**Thermal Shock Test**	-40~85℃，dwell time：30min，50cycles	4	After test, the products appearance, power, EVM and frequency error functional parameter shall be satisfied with the test specification.
9-11	**Aging Test**	60℃，120Hrs	10	The products at high temperature for a long time can continuous work normally
9-12	**Salt spray test**	NSS,35℃,PH:6.5~7.2,	2	The Sample shall has no minor or major defects, such as physical damage, crack, corrosion, deformation etc;
9-13	**ESD**	Discharge voltage: 1kV C: 150pF Discharge resistance：330Ω Positive10 times 1 time for each second	3	The products can recoverable smoothly after ESD test.

版权 CVTE 所有，本文档内容属商业机密。未经允许，任何组织或个人不得以任何形式复制和传播。

10. Package（包装）

（1） 吸塑盘图纸：

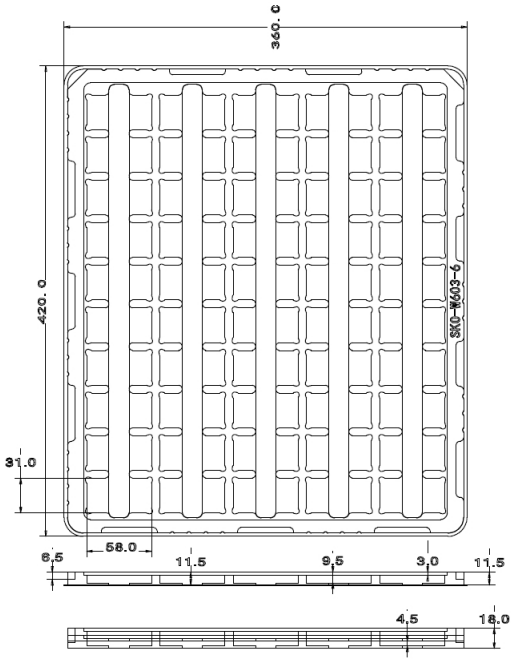

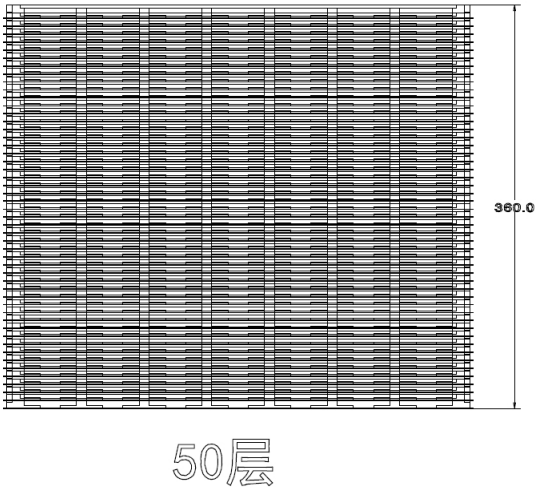

（2） 外箱示意图：

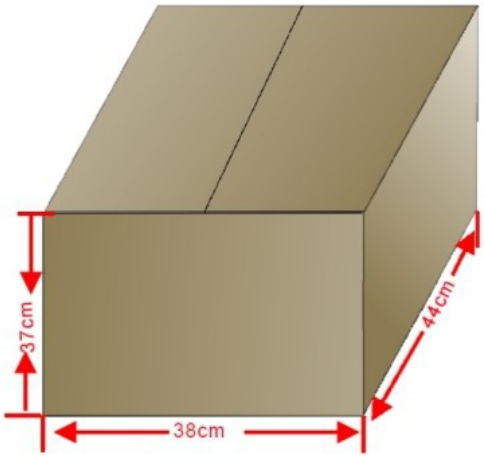

（3） 标签样式：

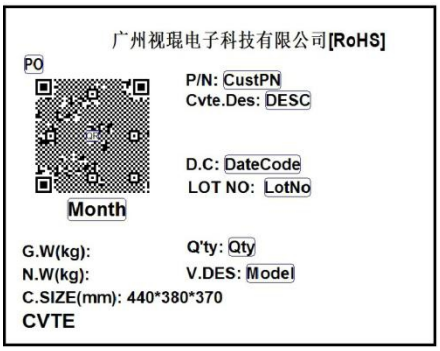

外箱标签示例【具体内容根据系统打印为准】

版权 CVTE 所有，本文档内容属商业机密。未经允许，任何组织或个人不得以任何形式复制和传播。

11. Socket Specification（插座规格）

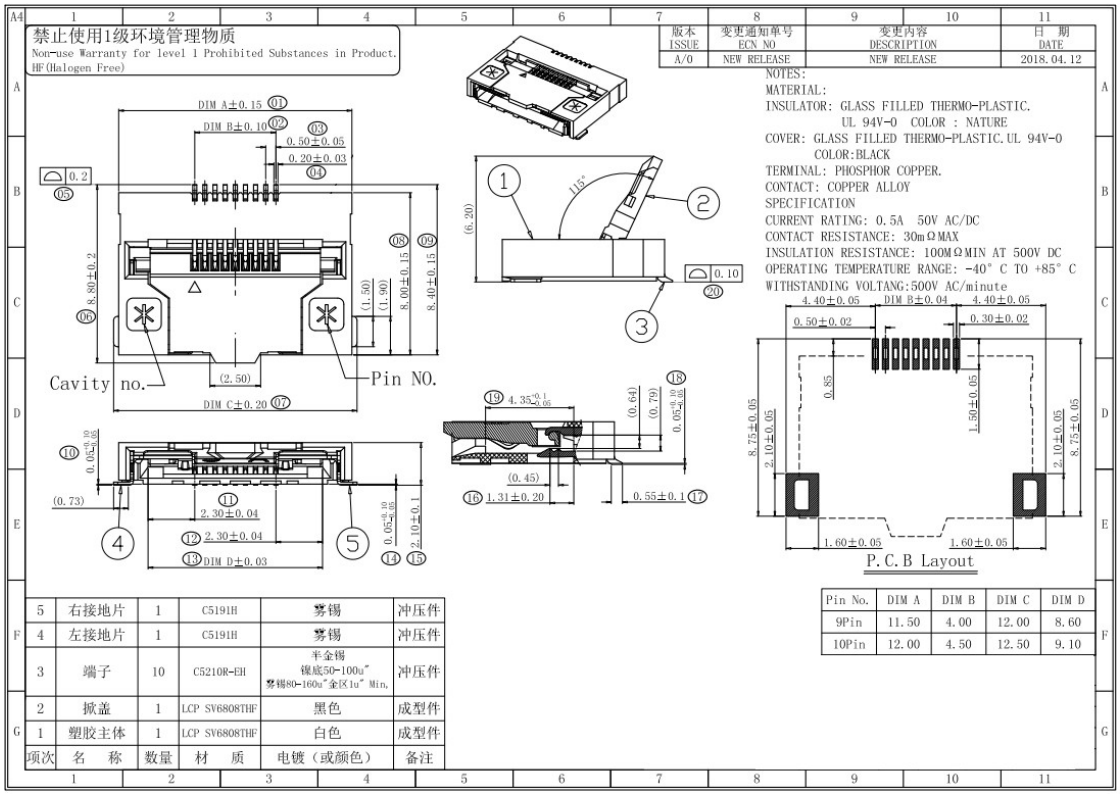

Pin No.	DIM A	DIM B	DIM C	DIM D
9Pin	11.50	4.00	12.00	8.60
10Pin	12.00	4.50	12.50	9.10

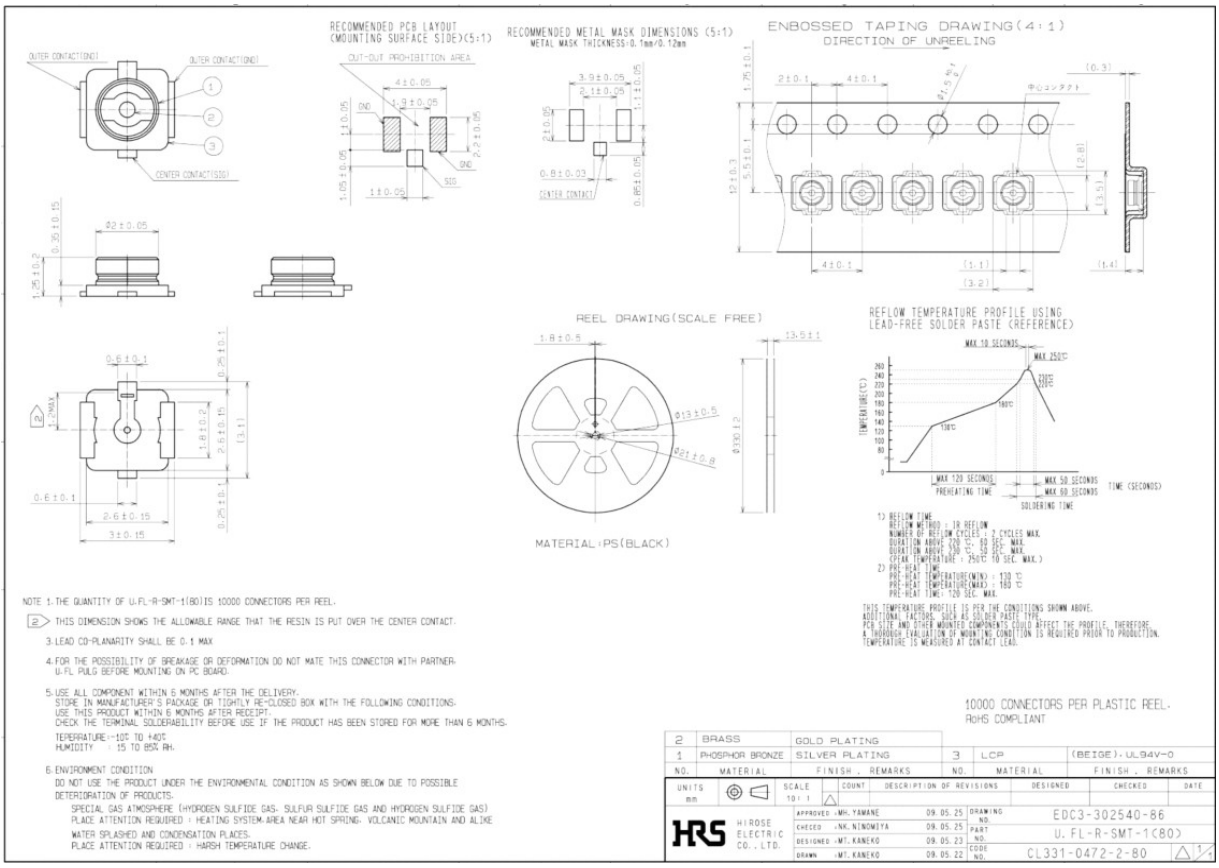

版权 CVTE 所有，本文档内容属商业机密。未经允许，任何组织或个人不得以任何形式复制和传播。

FCC Statement:

This device complies with Part 15 of the FCC Rules. Operation is subject to the following two conditions:
(1) This device may not cause harmful interference, and
(2) this device must accept any interference received, including interference that may cause undesired operation.

This equipment has been tested and found to comply with the limits for a Class B digital device, pursuant to Part 15 of the FCC Rules. These limits are designed to provide reasonable protection against harmful interference in a residential installation. This equipment generates, uses and can radiate radio frequency energy and, if not installed and used in accordance with the instructions, may cause harmful interference to radio communications. However, there is no guarantee that interference will not occur in a particular installation. If this equipment does cause harmful interference to radio or television reception, which can be determined by turning the equipment off and on, the user is encouraged to try to correct the interference by one of the following measures:

- Reorient or relocate the receiving antenna.
- Increase the separation between the equipment and receiver.
- Connect the equipment into an outlet on a circuit different from that to which the receiver is connected.
- Consult the dealer or an experienced radio/TV technician for help.

FCC Caution: Any changes or modifications not expressly approved by the party responsible for compliance could void the user's authority to operate this equipment. This transmitter must not be co-located or operating in conjunction with any other antenna or transmitter.

List of applicable FCC rules

This module has been tested and found to comply with part 15 requirements for Modular Approval.

Antenna Placement Within the Host Platform

The module is tested for standalone mobile RF exposure use condition.
(1) The antenna must be installed such that 20 cm is maintained between the antenna and users,
(2) The transmitter module may not be co-located with any other transmitter or antenna.
In the event that these conditions cannot be met (for example certain laptop configurations or co-location with another transmitter), then the FCC authorization is no longer considered valid and the FCC ID cannot be used on the final product. In these circumstances, the OEM integrator will be responsible for re-evaluating the end product (including the transmitter) and obtaining a separate FCC authorization.

RF exposure considerations

This equipment complies with FCC radiation exposure limits set forth for an uncontrolled environment. This equipment should be installed and operated with minimum distance 20cm between the radiator & your body.

Antenna Type and Gain

The following antennas have been certified for use with this module.
Only antennas of the same type with equal or lower gain may also be used with this module. Other types of antennas and/or higher gain antennas may require the additional authorization for operation.
Antenna Specification list below:

Antenna Type	Frequency Bands (MHz)	Max. Antenna Gain (dBi)
PIFA	2400 ~ 2483.5	4.93
PCBA	2400 ~ 2483.5	1.72

End Product Labeling

When the module is installed in the host device, the FCC ID label must be visible through a window on the final device or it must be visible when an access panel, door or cover is easily re-moved. If not, a second label must be placed on the outside of the final device that contains the following text: “Contains FCC ID: 2AR82-SKOW603601”. The FCC ID can be used only when all FCC compliance requirements are met.
The end product shall bear the following 15.19 statement: This device complies with part 15 of the FCC Rules. Operation is subject to the following two conditions:

(1) This device may not cause harmful interference, and
(2) This device must accept any interference received, including interference that may cause undesired operation.

Information on test modes and additional testing requirements

This transmitter is tested in a standalone mobile RF exposure condition and any co-located or simultaneous transmission with other transmitter(s) class II permissive change re-evaluation or new certification.

Part 15 Subpart B disclaimer

This transmitter module is tested as a subsystem and its certification does not cover the FCC Part 15 Subpart B rule requirement applicable to the final host. The final host will still need to be reassessed for compliance to this portion of rule requirements if applicable.

As long as all conditions above are met, further transmitter test will not be required. However, the OEM integrator is still responsible for testing their end-product for any additional compliance requirements required with this module installed.

Important Note

In the event that these conditions can not be met (for example certain laptop configurations or co-location with another transmitter), then the FCC authorization is no longer considered

valid and the FCC ID can not be used on the final product. In these circumstances, the OEM integrator will be responsible for reevaluating the end product (including the transmitter) and obtaining a separate FCC authorization.

Manual Information to the End User

The OEM integrator has to be aware not to provide information to the end user regarding how to install or remove this RF module in the user's manual of the end product which integrates this module.

The host integrator must follow the integration instructions provided in this document and ensure that the composite-system end product complies with the requirements by a technical assessment or evaluation to the rules and to KDB Publication 996369.

The host integrator installing this module into their product must ensure that the final composite product complies with the requirements by a technical assessment or evaluation to the rules, including the transmitter operation and should refer to guidance in KDB 996369.

OEM/Host manufacturer responsibilities

OEM/Host manufacturers are ultimately responsible for the compliance of the Host and Module. The final product must be reassessed against all the essential requirements of the FCC rule such as FCC Part 15 Subpart B before it can be placed on the US market. This includes reassessing the transmitter module for compliance with the Radio and EMF essential requirements of the FCC rules. This module must not be incorporated into any other device or system without retesting for compliance as multi-radio and combined equipment

ISED Statement:

This Class B digital apparatus complies with Canadian ICES-003.

Cet appareil numérique de classe B est conforme à la norme canadienne ICES-003.

This device complies with Industry Canada licence-exempt RSS standard(s).

Operation is subject to the following two conditions:

1) This device may not cause interference, and
2) This device must accept any interference, including interference that may cause undesired operation of the device.

Le présent appareil est conforme aux CNR d'Industrie Canada applicables auxappareils radio exempts de licence.

L'exploitation est autorisée aux deux conditions suivantes:

1) l'appareil ne doit pas produire de brouillage, et
2) l'utilisateur de l'appareil doit accepter tout brouillage adioélectrique subi, même si le brouillage est susceptible d'en compromettre le fonctionnement.

RF Radiation Exposure Statement:

This equipment complies with ISED radiation exposure limits set forth for an uncontrolled environment. This equipment should be installed and operated with a minimum distance of 20 centimeters between the radiator and your body.

Déclaration d'exposition aux radiations:

Cet appareil est conforme aux limites d'exposition aux rayonnements définies pour un environnement non contrôlé. Cet équipement doit être installé et utilisé à une distance minimale de 20 centimètres entre le radiateur et votre corps.

This device is intended only for OEM integrators under the following conditions:

The transmitter module may not be co-located with any other transmitter or antenna.

As long as above conditions is met, further transmitter test will not be required. However, the OEM integrator is still responsible for testing their end-product for any additional compliance requirements required with this module installed.

1) Operation shall be limited to indoor use only; and
2) Operation on oil platforms, cars, trains, boats and aircraft shall be prohibited except for on large aircraft flying above 10,000 ft.
3) This device is limited to under control an indoor access point or an indoor subordinate device and shall not be capable of initiating a network.

Cet appareil est conçu uniquement pour les intégrateurs OEM dans les conditions suivantes:

Le module émetteur peut ne pas être coïmplanté avec un autre émetteur ou antenne.

Tant que les 1 conditions ci-dessus sont remplies, des essais supplémentaires sur l'émetteur ne seront pas nécessaires. Toutefois, l'intégrateur OEM est toujours responsable des essais sur son produit final pour toutes exigences de conformité supplémentaires requis pour ce module installé.

1) *Utilisation limitée à l'intérieur seulement;*
2) *Utilisation interdite à bord de plateformes de forage pétrolier, de voitures, de trains, de bateaux et d'aéronefs, sauf à bord d'un gros aéronef volant à plus de 10 000 pieds d'altitude.*
3) *Ce dispositif est limité à un point d'accès à l'intérieur ou à un dispositif subordonné à l'intérieur et ne doit pas être capable d'initier un réseau.*

IMPORTANT NOTE:

In the event that these conditions can not be met (for example certain laptop configurations or co-location with another transmitter), then the Canada authorization is no longer considered valid and the IC can not be used on the final product. In these circumstances, the OEM integrator will be responsible for re-evaluating the end product (including the transmitter) and obtaining a separate Canada authorization.

NOTE IMPORTANTE:

Dans le cas où ces conditions ne peuvent être satisfaites (par exemple pour certaines configurations d'ordinateur portable ou de certaines co-localisation avec un autre émetteur), l'autorisation du Canada n'est plus considéré comme valide et IC ne peut pas être utilisé sur le produit final. Dans ces circonstances, l'intégrateur OEM sera chargé de réévaluer le produit final (y compris l'émetteur) et l'obtention d'une autorisation distincte au Canada.

Required end product labeling:
This transmitter module is authorized only for use in device where the antenna may be installed and operated with greater than 20cm between the antenna and users. The final end product must be labeled in a visible area with the following: “Contains IC: 24728-SKOW603601”.

Plaque signalétique du produit final
Ce module émetteur est autorisé uniquement pour une utilisation dans un appareil où l’antenne peut être installée et utilisée à plus de 20 cm entre l’antenne et les utilisateurs. Le produit final doit être étiqueté dans un endroit visible avec l'inscription suivante: "Contient des IC: 24728-SKOW603601".

Manual Information To the End User
The OEM integrator has to be aware not to provide information to the end user regarding how to install or remove this RF module in the user’s manual of the end product which integrates this module.

The end user manual shall include all required regulatory information/warning as show in this manual.

The following text, or an equivalent notice, that shall be displayed in a conspicuous location, either in the user manual or on the device, or both:

This device contains licence-exempt transmitter(s)/receiver(s) that comply with Innovation, Science and Economic Development Canada’s licence-exempt RSS(s). Operation is subject to the following two conditions:

1) This device may not cause interference.
2) This device must accept any interference, including interference that may cause undesired operation of the device.

Manuel d'information à l'utilisateur final
L'intégrateur OEM doit être conscient de ne pas fournir des informations à l'utilisateur final quant à la façon d'installer ou de supprimer ce module RF dans le manuel de l'utilisateur du produit final qui intègre ce module.

Le manuel de l'utilisateur final doit inclure toutes les informations réglementaires requises et avertissements comme indiqué dans ce manuel.

l’énoncé qui suit, ou l’équivalent, à un endroit bien en vue dans le manuel d’utilisation ou sur l’appareil, ou encore aux deux endroits :

L’émetteur/récepteur exempt de licence contenu dans le présent appareil est conforme aux CNR d’Innovation, Sciences et Développement économique Canada applicables aux appareils radio exempts de licence. L’exploitation est autorisée aux deux conditions suivantes :

1. *L’appareil ne doit pas produire de brouillage;*
2. *L’appareil doit accepter toute interférence, y compris toute interférence pouvant entraîner un fonctionnement indésirable du dispositif.*

Antennas

The following antennas have been certified for use with this module; antennas of the same type with equal or lower gain may also be used with this module. The antenna must be installed such that 20F cm can be maintained between the antenna and users.

This radio transmitter has been approved by Innovation, Science and Economic Development Canada to operate with the antenna types listed below, with the maximum permissible gain indicated. Antenna types not included in this list that have a gain greater than the maximum gain indicated for any type listed are strictly prohibited for use with this device.

Antenna Specification list below:

Antenna Type	Frequency Bands (MHz)	Max. Antenna Gain (dBi)
PIFA	2400 ~ 2483.5	4.93
PCBA	2400 ~ 2483.5	1.72

ANTENNE

Les antennes suivantes ont été certifiées pour une utilisation avec ce module; des antennes du même type à gain égal ou inférieur peuvent également être utilisées avec ce module. L'antenne doit être installée de telle sorte que 20 cm puissent être maintenus entre l'antenne et les utilisateurs.

Cet émetteur radio a été approuvé par Innovation, Sciences et Développement économique Canada pour fonctionner avec les types d'antenne énumérés ci-dessous, avec le gain maximal autorisé indiqué. Les types d'antenne non inclus dans cette liste qui ont un gain supérieur au gain maximum indiqué pour tout type répertorié sont strictement interdits pour l'utilisation avec cet appareil.