保密等级：机密

SPECIFICATION

产品规格书

SKO.WB663U.3

IEEE 802.11a/b/g/n/ac 2T2R USB Wi-Fi Module

Integrated BT 2.1+EDR/4.2/5.1

Approved by Shikun		
Checked by 审核	Rechecked by 复审	Approved by 批准

Please send the original back to us after you have approved and signed.
客户承认签章后敬请寄回正本一份。

Approved by customer		
Comments 确认意见	Approved by 批准签字	Company's seal 盖章
Customer's Name:		

版权 CVTE 所有，本文档内容属商业机密。未经允许，任何组织或个人不得以任何形式复制和传播。

REVISION HISTORY

VERSION	DATE	BOARD ID	PAGE	DESCRIPTION	AUTHOR
V1.0	2021.07.19	SKO.WB663U.3 A21286	All	First release	Zhouz
V1.1	2021.07.28	SKO.WB663U.3 A21286	3	修改实物图片	Zhouz

版权 CVTE 所有，本文档内容属商业机密。未经允许，任何组织或个人不得以任何形式复制和传播。

Content

1. Introduction（简介）.....1
2. Features（特性）.....1
3. Block Diagram（结构框图）.....2
4. Package Outline and Mounting（外形及安装尺寸）.....2
5. Product Pictures（实物图片）.....3
6. Key Materials（关键物料）.....4
7. General Requirements（一般要求）.....4
8. Electrical Characteristics（电气特性）.....4
   8.1 IEEE 802.11b Section.....5
   8.2 IEEE 802.11g Section.....5
   8.3 IEEE 802.11n HT20 Section(2.4GHz).....6
   8.4 IEEE 802.11n HT40 Section(2.4GHz).....7
   8.5 IEEE 802.11a Section.....8
   8.6 IEEE 802.11n HT20 Section(5GHz).....9
   8.7 IEEE 802.11n HT40 Section(5GHz).....9
   8.8 IEEE 802.11ac Section.....10
   8.9 Bluetooth Section.....11
9. Mechanical,Environmental and Reliability Tests（机械、环境和可靠性测试）13
10. Package（包装）.....15
11. Socket Specification（插座规格）.....16
12. Warning Information（警告语）.....16

版权 CVTE 所有，本文档内容属商业机密。未经允许，任何组织或个人不得以任何形式复制和传播。

1. Introduction（简介）

SKO.WB663U.3 module is based on MEDIATEK MT7663BUN solution. MT7663BUN is a highly integrated single chip which features a low power 2x2 11a/b/g/n/ac dual-band Wi-Fi subsystem. The Wi-Fi subsystem contains the 802.11a/b/g/n/ac radio, baseband, and MAC that are designed to meet both the low power and high throughput application. The Bluetooth subsystem contains the Bluetooth radio which complies with Bluetooth v2.1+EDR, v4.2, and v5.1, baseband, link controller. This documentation describes the engineering requirements specification.

SKO.WB663U.3 模块基于 MEDIATEK MT7663BUN 解决方案。MT7663BUN 是一款高度集成的芯片，具有低功耗 2x2 11a/b/g/n/ac 双频 Wi-Fi 子系统。Wi-Fi 子系统包含 802.11a/b/g/n/ac 射频、基带和 MAC，旨在满足低功耗和高吞吐量应用。蓝牙子系统包含蓝牙 2.1+EDR、v4.2 和 v5.1、基带和链路控制器。本文件描述了工程需求规范。

2. Features（特性）

Reserving System 接收制式	IEEE Std. 802.11a
	IEEE Std. 802.11b
	IEEE Std. 802.11g
	IEEE Std. 802.11n
	IEEE Std. 802.11ac
	BT 2.1+EDR/4.2/5.1
Chip Solution 芯片方案	MT7663BUN
Band 波段	2.4/5GHz
Dimensions 尺寸	70.00mm×25.05mm×3.20mm

型号	安装方式	支持标准	频段	天线接口	备注
SKO.WB663U.3	外挂 Ext-WIFI	IEEE 802.11a/b/g/n/ac BT 2.1+EDR/4.2/5.1	2.4/5GHz	WiFi：板载天线 BT：Ipex	70.00mm×25.05mm×3.20mm

版权 CVTE 所有，本文档内容属商业机密。未经允许，任何组织或个人不得以任何形式复制和传播。

3. Block Diagram（结构框图）

N/A

4. Package Outline and Mounting（外形及安装尺寸）

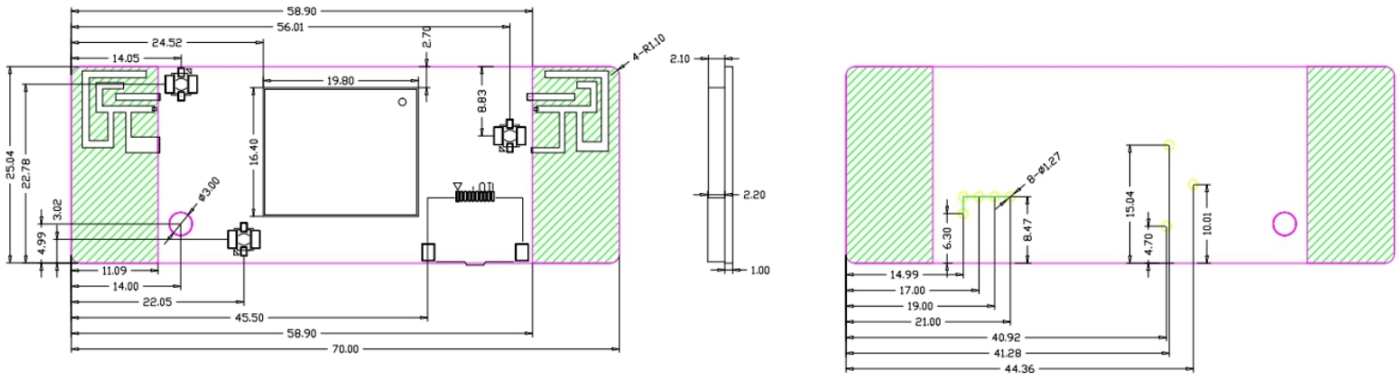

模组俯视图　　模组侧视图　　模组底视图

注意：1、单位为 mm

2、模组外形尺寸公差为 0.2mm，板厚以及未标注公差为 0.1mm

版权 CVTE 所有，本文档内容属商业机密。未经允许，任何组织或个人不得以任何形式复制和传播。

Pin Definition（引脚定义）

PIN	SYMBOL	DESCRIPTION
1	VDD_5V	5V Input \ 5V 输入
2	VDD_5V	5V Input \ 5V 输入
3	BT_WOW	BT WAKE HOST \BT 唤醒主机，模组上拉到 3.3V，唤醒时模组输出低电平
4	GND	Ground \ 地
5	GND	Ground \ 地
6	USB_DM	USB2.0 DM Signal \ USB2.0 差分负电压信号
7	USB_DP	USB2.0 DP Signal \ USB2.0 差分正电压信号
8	GND	Ground \ 地
9	WiFi_WOW	WIFI WAKE HOST \ WIFI 唤醒主机，模组上拉到 3.3V，唤醒时模组输出低电平
10	RESET	RESET \ 复位，正常工作为高电平，模组内部上拉，输入低电平时模组复位

5. Product Pictures（实物图片）

正视图（**top view**）

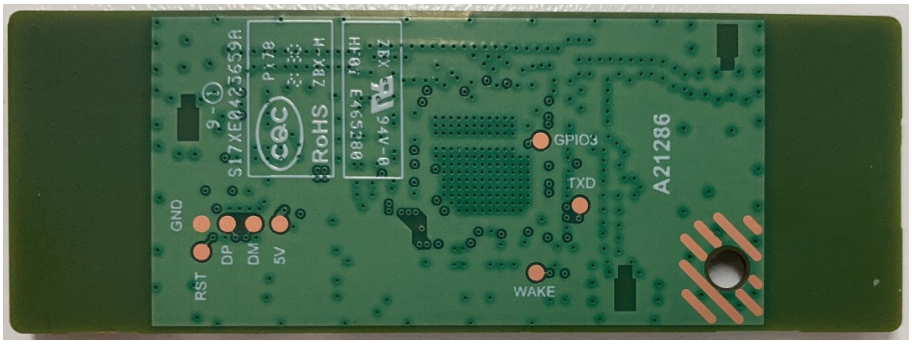

背视图（**bottom view**）

版权 CVTE 所有，本文档内容属商业机密。未经允许，任何组织或个人不得以任何形式复制和传播。

6. Key Materials（关键物料）

序号	关键件名称	型号	规格/材料	备注
1	集成电路	MT7663BUN	76-QFN	
2	PCB	SKO.WB663U.3	FR-4,4LAY	
3	晶体振荡器	2.3.3.400001208	40MHz	
4	双工器	RFDIP160806ALM6T30		

7. General Requirements（一般要求）

No.	Feature	Description
7-1	Operation Voltage 工作电压范围	5.0V+/-0.5
7-2	Current Consumption 最大电流	800mA
7-3	Ripple 纹波	≤250Vp-p
7-4	Operation Temperature 工作温度范围	0°C to +40°C
7-5	Antenna Type 天线类型	Internal antenna(WiFi) & External antenna(BT)
7-6	USB	High Speed USB 2.0 Interface
7-7	Storage Temperature 存储温度	-40°C to +85°C

8. Electrical Characteristics（电气特性）

除非另有说明，电气规范试验是在下列条件下进行，环境条件温度：25℃±5℃；电源电压：模块输入电压 5.0V（±10%）；

The Test for electrical specification was performed under the following condition unless otherwise specified.

Ambient condition Temperature :25℃ ± 5℃;

Power supply voltages：5.0V (±10%) input power at the Module.

版权 CVTE 所有，本文档内容属商业机密。未经允许，任何组织或个人不得以任何形式复制和传播。

9. Mechanical,Environmental and Reliability Tests

（机械、环境和可靠性测试）

Test Items		Test Conditions	Qty	Criteria Condition
9-1	**Drop test**	The packed samples was tested at below condition: Drop height: 760mm(0.5~9.5kg) 610mm(9.5~18.5kg) Drop time: 1x corner, 3x edge and 6x face.	1xBox	After test, the outer box and inner box will not been broken by appearance visual inspection, and the products should be ok.
9-2	**Vibration test**	X-Y-Z direction, first Frequency changing from 10Hz to 30Hz to 10Hz,amplitude 2.0mm, 5 times vibrations, 5x times vibration.	1xBox	After test, the outer box and inner box will not been broken by appearance visual inspection and the products should be ok.
9-3	**Soldering ability test (Only for SKI module)**	Soldering temperature: 245±5℃ Soldering duration: 3±0.5S	3	1.After soldering, the soldered area must be covered by a smooth bright solder layer, some deficiencies such as a small amount of the pinhole, not wetting are allowed, but the deficiencies can not be in the same place; 2. At least 90% of soldered area shall be covered continuously by the soldering material.
9-4	**High Temperature and Humidity Operation Test**	Leave samples in 60℃, 90% RH @ 24 hours	4	After test, the products appearance, power, EVM and frequency error functional parameter shall be satisfied with the test specification.
9-5	**Low Temperature Operation Test**	Leave samples in -15℃ @24 hours	4	After test, the products appearance, power, EVM and frequency error functional parameter shall be satisfied with the test specification.
9-6	**High Temperature and Humidity Start Test**	Leave samples in 60℃, 90% RH for 4x hours	4	After test, power on and off the samples for 3x tiems, the samples should be able to start normally

版权 CVTE 所有，本文档内容属商业机密。未经允许，任何组织或个人不得以任何形式复制和传播。

9-7	**Low temperature start test**	Leave samples in -15℃ for 4x hours	4	After test, power on and off the samples for 3x tiems, the samples should be able to start normally
9-8	**High Temperature and Humidity Storage Test**	Leave samples in 85℃, 95% RH @ 48 hours	4	After test, the products appearance, power, EVM and frequency error functional parameter shall be satisfied with the test specification.
9-9	**Low Temperature Storage Test**	Leave samples in -40℃, @48 hours	4	After test, the products appearance, power, EVM and frequency error functional parameter shall be satisfied with the test specification.
9-10	**Thermal Shock Test**	-40~85℃，dwell time：30min，50cycles	4	After test, the products appearance, power, EVM and frequency error functional parameter shall be satisfied with the test specification.
9-11	**Aging Test**	60℃，120Hrs	10	The products at high temperature for a long time can continuous work normally
9-12	**Salt spray test**	NSS,35℃,PH:6.5~7.2,	2	The Sample shall has no minor or major defects, such as physical damage, crack, corrosion, deformation etc;
9-13	**ESD**	Discharge voltage: 1kV C: 150pF Discharge resistance：330Ω Positive10 times 1 time for each second	3	The products can recoverable smoothly after ESD test.

版权 CVTE 所有，本文档内容属商业机密。未经允许，任何组织或个人不得以任何形式复制和传播。

10. Package（包装）

（1）包装托盘

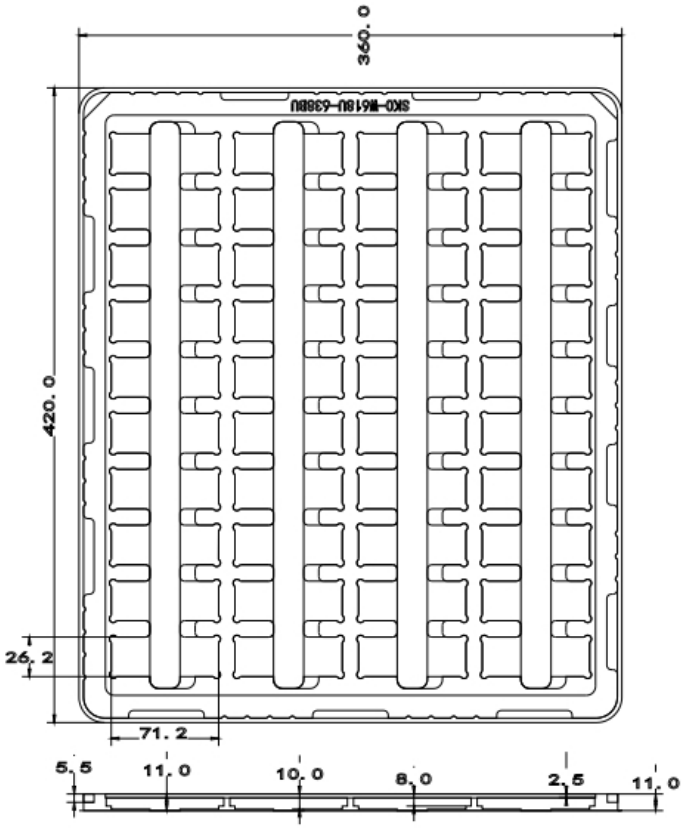

（2）外箱图纸

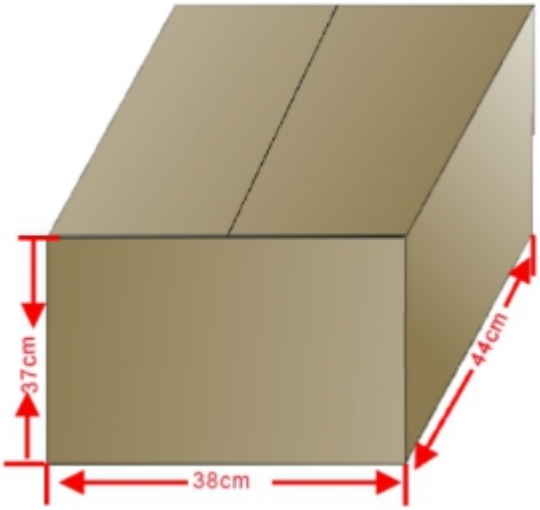

（3）包装要求

每盘包装 40 片（4*10），每箱装 55 盘，每箱数量=40*55=2200 PCS

版权 CVTE 所有，本文档内容属商业机密。未经允许，任何组织或个人不得以任何形式复制和传播。

11. Socket Specification（插座规格）

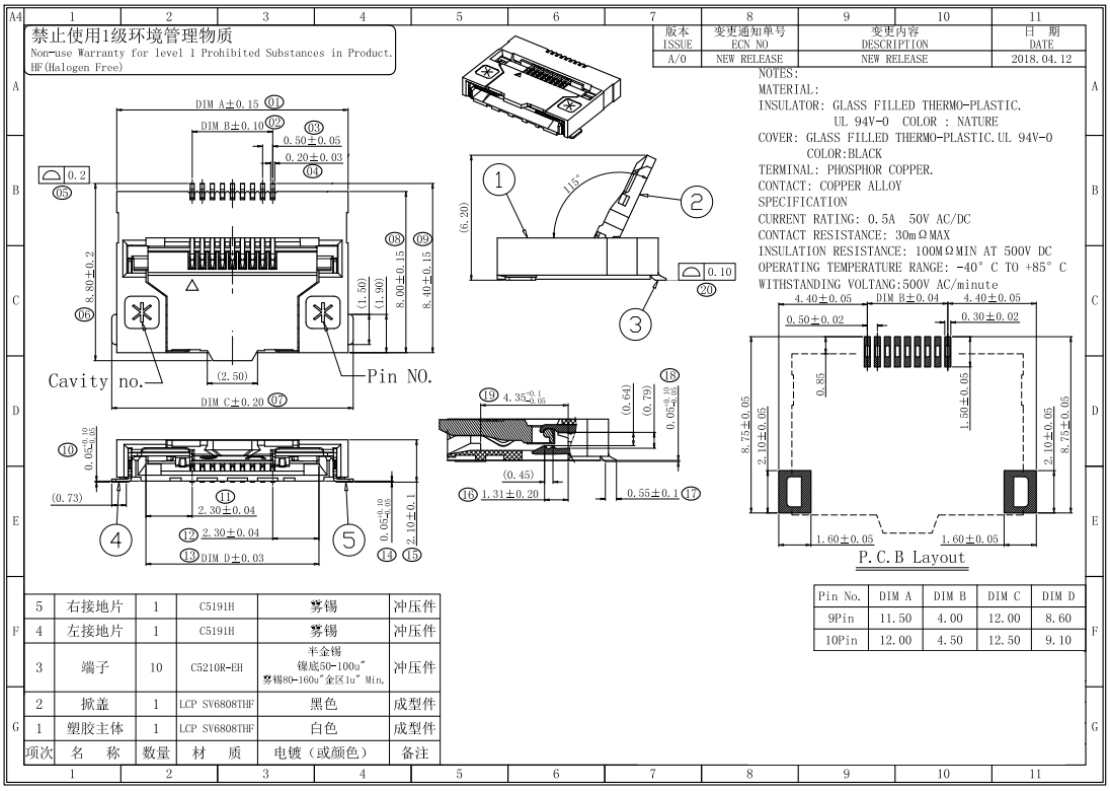

项次	名 称	数量	材 质	电镀（或颜色）	备注
5	右接地片	1	C5191H	雾锡	冲压件
4	左接地片	1	C5191H	雾锡	冲压件
3	端子	10	C5210R-EH	半金锡 镍底50-100u" 雾锡80-160u"金区1u" Min.	冲压件
2	掀盖	1	LCP SV6808THF	黑色	成型件
1	塑胶主体	1	LCP SV6808THF	白色	成型件

Pin No.	DIM A	DIM B	DIM C	DIM D
9Pin	11.50	4.00	12.00	8.60
10Pin	12.00	4.50	12.50	9.10

版权 CVTE 所有，本文档内容属商业机密。未经允许，任何组织或个人不得以任何形式复制和传播。

FCC Statement

This device complies with Part 15 of the FCC Rules. Operation is subject to the following two conditions:
(1) this device may not cause harmful interference, and (2) this device must accept any interference received, including interference that may cause undesired operation.
Caution: The user is cautioned that changes or modifications not expressly approved by the party responsible for compliance could void the user's authority to operate the equipment.

Note: This equipment has been tested and found to comply with the limits for a Class B digital device, pursuant to part 15 of the FCC Rules. These limits are designed to provide reasonable protection against harmful interference in a residential installation. This equipment generates uses and can radiate radio frequency energy and, if not installed and used in accordance with the instructions, may cause harmful interference to radio communications. However, there is no guarantee that interference will not occur in a particular installation. If this equipment does cause harmful interference to radio or television reception, which can be determined by turning the equipment off and on, the user is encouraged to try to correct the interference by one or more of the following measures:
—Reorient or relocate the receiving antenna.
—Increase the separation between the equipment and receiver.
—Connect the equipment into an outlet on a circuit different from that to which the receiver is connected.
—Consult the dealer or an experienced radio/TV technician for help.

FCC RF Radiation Exposure Statement:
This equipment complies with FCC radiation exposure limits set forth for an uncontrolled environment. This equipment should be installed and operated with a minimum distance of 20cm between the radiator and any part of your body.

The device must be professionally installed

The intended use is generally not for the general public.It is generally for industry/commercial use.
The connector is within the transmitter enclosure and can only be accessed by disassembly of the transmitter that is not normally required. the user has no access to the connector.
Installation must be controlled. Installation requires special training

This module has been assessed against the following FCC rule parts: CFR 47 FCC Part 15 C (15.247, DTS and DSS) and CFR 47 FCC Part 15 E (NII). It is applicable to the modular transmitter

This radio transmitter 2AR82-SKIWB663U201has been approved by Federal Communications Commission to operate with the antenna types listed below, with the maximum permissible gain indicated. Antenna types not included in this list that have a gain greater than the maximum gain indicated for any type listed are strictly prohibited for use with this device.

The concrete contents to check are the following three points.

1) Must use antenna such as D40FM-K09 with gain not exceeding 4.93dBi;
2) Should be installed so that the end user cannot modify the antenna;
3) Feed line should be designed in 50ohm

Fine tuning of return loss etc. can be performed using a matching network.

WiFi：

Frequency (MHz) fréquences	Antenna Type types d'antenne	Antenna Gain (dBi) Gain maximal d'antenne
2412-2462	PCB Antenna 1	1.68
2412-2462	PCB Antenna 2	1.81
5180-5825	PCB Antenna 1	2.01
5180-5825	PCB Antenna 2	2.03

BT：

Frequency (MHz) fréquences	Antenna Type types d'antenne	Antenna Gain (dBi) Gain maximal d'antenne
2402-2480	FIFA Antenna	4.93/190mm
2402-2480	FIFA Antenna	4.93/230mm
2402-2480	FIFA Antenna	4.93/390mm

Canada Statement

This device contains licence-exempt transmitter(s)/receiver(s) that comply with Innovation, Science and Economic Development Canada’s licence-exempt RSS(s). Operation is subject to the following two conditions:
(1) This device may not cause interference.
(2) This device must accept any interference, including interference that may cause undesired operation of the device.

L'émetteur/récepteur exempt de licence contenu dans le présent appareil est conforme aux
CNR d'Innovation, Sciences et Développement économique Canada applicables aux appareils radio exempts de licence. L'exploitation est autorisée aux deux conditions suivantes :

1)L'appareil ne doit pas produire de brouillage;
2)L'appareil doit accepter tout brouillage radioélectrique subi, même si le brouillage est susceptible d'en compromettre le fonctionnement.

The device for operation in the band 5150–5250 MHz is only for indoor use to reduce the potential for harmful interference to co-channel mobile satellite systems

Les dispositifs fonctionnant dans la bande de 5 150 à 5 250 MHz sont réservés uniquement pour une utilisation à l’intérieur afin de réduire les risques de brouillage préjudiciable aux systèmes de satellites mobiles utilisant les mêmes canaux.

Please notice that if the ISED certification number is not visible when the module is installed inside another device, then the outside of the device into which the module is installed must also display a label referring to the enclosed module. This exterior label can use wording such as the following: “Contains IC: 24728-SKOWB663U31” any similar wording that expresses the same meaning may be used.

l'appareil hôte doit porter une étiquette donnant le numéro de certification du module d'Industrie Canada, précédé des mots « Contient un module d'émission », du mot « IC: 24728-SKOWB663U31 » ou d'une formulation similaire exprimant le même sens, comme suit

The device meets the exemption from the routine evaluation limits in section 2.5 of RSS 102 and compliance with RSS-102 RF exposure, users can obtain Canadian information on RF exposure and compliance.
Le dispositif rencontre l'exemption des limites courantes d'évaluation dans la section 2.5 de RSS 102 etla conformité à l'exposition de RSS-102 rf, utilisateurs peut obtenir l'information canadienne surl'exposition et la conformité de rf.

This transmitter must not be co-located or operating in conjunction with any other antenna or transmitter. This equipment should be installed and operated with a minimum distance of 20 centimeters between the radiator and your body.
Cet émetteur ne doit pas être Co-placé ou ne fonctionnant en même temps qu'aucune autre antenne ouémetteur. Cet équipement devrait être installé et actionné avec une distance minimum de 20 centimètres entre le radiateur et votre corps.

This radio transmitter 24728-SKOWB663U31 has been approved by Innovation, Science and Economic Development Canada to operate with the antenna types listed below, with the maximum permissible gain indicated. Antenna types not included in this list that have a gain greater than the maximum gain indicated for any type listed are strictly prohibited for use with this device.
Le présent émetteur radio 24728-SKOWB663U31 a été approuvé par Innovation, Sciences et Développement économique Canada pour fonctionner avec les types d'antenne énumérés ci-dessous et ayant un gain admissible maximal. Les types d'antenne non inclus dans cette liste, et dont le gain est supérieur au gain maximal indiqué pour tout type figurant sur la liste, sont strictement interdits pour l'exploitation de l'émetteur.
The concrete contents to check are the following three points.

1) Must use antenna such as D40FM-K09 with gain not exceeding 4.93dBi;

2) Should be installed so that the end user cannot modify the antenna;

3) Feed line should be designed in 50ohm

Fine tuning of return loss etc. can be performed using a matching network.

Le contenu concret à vérifier sont les trois points suivants.
1) 1) doit utiliser une antenne comme D40FM-K09 avec pifa gain n'excédant pas 4,93 dBi
2) doivent être installés de façon que l'utilisateur final ne peut pas modifier l'antenne
3) La ligne d' alimentation doit être conçue en 50ohm
Le réglage précis de la perte de rendement, etc. peut être effectué en utilisant un réseau correspondant..

WiFi:

Frequency (MHz) fréquences	Antenna Type types d'antenne	Antenna Gain (dBi) Gain maximal d'antenne
2412-2462	PCB Antenna 1	1.68
2412-2462	PCB Antenna 2	1.81
5180-5825	PCB Antenna 1	2.01
5180-5825	PCB Antenna 2	2.03

BT:

Frequency (MHz) fréquences	Antenna Type types d'antenne	Antenna Gain (dBi) Gain maximal d'antenne
2402-2480	FIFA Antenna	4.93/190mm
2402-2480	FIFA Antenna	4.93/230mm
2402-2480	FIFA Antenna	4.93/390mm

Notice to OEM integrator

Notice to OEM integrator

Must use the device only in host devices that meet the FCC/ISED RF exposure category of mobile, which means the device is installed and used at distances of at least 20cm from persons.

This transmitter must not be co-located or operating in conjunction with any other antenna or transmitter.

The end user manual shall include FCC Part 15 /ISED RSS GEN compliance statements related to the transmitter as show in this manual(FCC/ICanada statement).

Host manufacturer is responsible for compliance of the host system with module installed with all other applicable requirements for the system such as Part 15 B, ICES 003.

Host manufacturer is strongly recommended to confirm compliance with FCC/ISED requirements for the transmitter when the module is installed in the host.

Must have on the host device a label showing Contains FCC ID: 2AR82-SKOWB663U301， IC: 24728-SKOWB663U31

The use condition limitations extend to professional users, then instructions must state that this information also extends to the host manufacturer's instruction manual.

This module is stand-alone modular. If the end product will involve the Multiple simultaneously transmitting condition or different operational conditions for a stand-alone modular transmitter in a host, host manufacturer have to consult with module manufacturer for the installation method in end system.

Any company of the host device which install this modular should perform the test of radiated & condicted emission and spurious emission etc. according to FCC Part 15C: 15.247 and 15.209 & 15.207, 15B class B requirement, only if the test result comply with FCC part 15C: 15.247 and 15.209 & 15.207, 15B class B requirement. Then the host can be sold legally.

This modular transmitter is only FCC authorized for the specific rule parts (47CFR Part 15.247 and 15.407) listed on the grant, and that the host product manufacturer is responsible for compliance to any other FCC rules that apply to the host not covered by the modular transmitter grant of certification.

Host manufacturer is strongly recommended to confirm compliance with FCC/ISED requirements for the transmitter when the module is installed in the host.

Must have on the host device a label showing Contains FCC ID: 2AR82-SKOWB663U301 and Contains IC: 24728-SKOWB663U31

l'hôte doit utiliser l'instrument uniquement dans des dispositifs qui r é pondent à la fcc / (cat é gorie d'exposition rf mobile, ce qui signifie le dispositif est install é et utilis é à une distance d'au moins 20 cm de personnes.

le manuel de l'utilisateur final doit inclure la partie 15 / (fac rss gen d é clarations de conformit é relatives à l' é metteur que de montrer dans ce manuel.

le fabricant est responsable de la conformit é de l'hôte, le syst è me d'accueil avec le module install é avec toutes les autres exigences applicables du syst è me comme la partie 15 b, ices - 003.

accueillir le fabricant est fortement recommand é de confirmer la conformit é avec les exigences de la fcc / (é metteur lorsque le module est install é dans l'hôte.

le dispositif d'accueil doivent avoir une é tiquette indiquant contient FCC ID:2AR82-SKOWB663U301， IC: 24728-SKOWB663U31