INSTRUCTION MANUAL

PLEASE READ THIS MANUAL CAREFULLY BEFORE USING AND SAVE IT FOR FUTURE REFERENCE.

ALL PRODUCT DRAWING IS USED FOR REFERENCE ONLY, THE FINALLY CORRECT DETAILS PLEASE SEE REAL PRODUCTS.

Content

Safety Precautions
Assembly Steps
Folding Steps
Operation Instruction
Tips for Stretching
Maintenance
Explosive drawing
Part list

IMPORTANT SAFETY INSTRUCTIONS

Thank you for purchasing this treadmill, it has been designed and manufactured to give you many years of trouble free service. You may already be familiar with using a similar product but please take the time to read these instructions which have been written to ensure that you get the very best from your purchase.

When using an electrical appliance, basic precautions should always be followed, including the following:

Read all instructions before using this appliance.（增加）

Warnings

1. To reduce the risk of serious injury, read the following important warnings before using the treadmill.
2. Before starting any exercise program you should consult your doctor to determine if you have any physical or health conditions that could create a risk to your health and safety, or prevent you from using the treadmill properly. Your doctor's advice is essential if you are taking medication that affects your heart rate, blood pressure or cholesterol level.
3. Be aware of your body's signals. Incorrect or excessive exercise can damage your health. Stop exercising if you experience any of the following symptoms: Pain, tightness in your chest, irregular heartbeat, extreme shortness of breath, feeling light-headed, dizzy or nauseous. If you do experience any of these conditions you should consult your doctor before continuing with your exercise program.

Electrical Safety Precautions

Failure to observe the following warnings may increase the risk of an electric shock and personal injury.

1. Always check the power cable for damage prior to use. If any damage is observed, do NOT use the power cable.
2. Never touch the power cable with wet hands.
3. Position the power cable so that it cannot be walked on or pinched.
4. Only the supplied power cable should be used with the treadmill.

General Safety Precautions

DANGER – To reduce the risk of electric shock or injury from moving parts:

Always unplug this appliance from the electrical outlet immediately after using and before cleaning or servicing.

WARNING – To reduce the risk of burns, fire, electric shock, or injury to persons:

1. An appliance should never be left unattended when plugged in. Unplug from outlet when not in use, and before putting on or taking off parts.
2. Do not operate under blanket or pillow. Excessive heating can occur and cause fire, electric shock, or injury to persons.
3. This appliance is not intended for use by persons with reduced physical, sensory or mental capabilities, or lack of experience and knowledge, unless they have been given supervision or instruction concerning use of the appliance by a person responsible for their safety. Keep children under the age of 13 away from this machine.
4. Use this appliance only for its intended use as described in this manual. Do not use attachments not recommended by the manufacturer.
5. Never operate this appliance if it has a damaged cord or plug, if it is not working properly, if it has been dropped or damaged, or dropped into water. Return the appliance to a service center for examination and repair.
6. Do not carry this appliance by supply cord or use cord as a handle.

7. Keep the cord away from heated surfaces.
8. Never operate the appliance with the air openings blocked. Keep the air openings free of lint, hair, and the like.
9. Never drop or insert any object into any opening.
10. Do not use outdoors.
11. Do not operate where aerosol (spray) products are being used or where oxygen is being administered.
12. To disconnect, turn all controls to the off position, then remove plug from outlet.
13. WARNING: Connect this appliance to a properly grounded outlet only. See Grounding Instructions.
14. CAUTION: Risk of Injury to Persons – To Avoid Injury, use extreme caution when stepping onto or off of a moving belt. Read Instruction Manual Before Using.
15. CAUTION: The user is cautioned that changes or modifications not expressly approved by the party responsible for compliance could void the user's authority to operate the equipment.
16. This device complies with Part 15 of the FCC Rules. Operation is subject to the following two conditions: (1) this device may not cause harmful interference, and (2) this device must accept any interference received, including interference that may cause undesired operation.

NOTE: This equipment has been tested and found to comply with the limits for a Class B digital device, pursuant to Part 15 of the FCC Rules. These limits are designed to provide reasonable protection against harmful interference in a residential installation. This equipment generates, uses and can radiate radio frequency energy and, if not installed and used in accordance with the instructions, may cause harmful interference to radio communications. However, there is no guarantee that interference will not occur in a particular installation.

17. If this equipment does cause harmful interference to radio or television reception, which can be determined by turning the equipment off and on, the user is encouraged to try to correct the interference by one or more of the following measures:

-- Reorient or relocate the receiving antenna.

-- Increase the separation between the equipment and receiver.

-- Connect the equipment into an outlet on a circuit different from that to which the receiver is connected.

-- Consult the dealer or an experienced radio/TV technician for help.

18. FCC Radiation Exposure Statement:

This equipment complies with FCC radiation exposure limits set forth for an uncontrolled environment. This equipment should be installed and operated with a minimum distance of 20cm between the radiator and your body.

This transmitter must not be co-located or operating in conjunction with any other antenna or transmitter.

19. Ensure that the voltage of the electrical supply is the same as that indicated on the power cable.
20. It is the responsibility of the owner to ensure that all users of the treadmill are adequately informed of all warnings and safety precautions.
21. The treadmill is heavy and should be removed from the packaging and assembled by two people.
22. Before assembling the treadmill, make sure that it is not plugged into any electrical source, such as a wall socket.
23. Use the treadmill on a solid, flat level surface with a protective cover for your floor or carpet. Position the treadmill with at least 2 meters * 1 meter of free space behind the treadmill.

24. Keep the treadmill away from excessive moisture and dust.
25. Before using the treadmill, check the nuts and bolts are securely tightened.
26. The safety level of the treadmill can be maintained only if it is examined regularly for damage and wear. Replace defective components immediately. Do not use the treadmill until they have been replaced.
27. The treadmill has been tested and certified to EN957 under class H.C. Suitable for domestic, home use only.
28. Braking is controlled by the belt rotation power supply.
29. The treadmill is not suitable for therapeutic use.
30. Keep children and pets away from the treadmill. The treadmill is designed for adult use only.
31. Wear suitable clothing whilst using the treadmill. Avoid wearing loose clothing which may get caught in the treadmill or clothing that may restrict or prevent movement.
32. Do not arch your back when using the treadmill; always try to keep your back straight.
33. If you feel pain or dizziness while exercising, stop immediately and cool down.
34. The pulse sensor is not a medical device. Several things including user movement, may affect the accuracy of the sensor. The sensor is intended only as an exercise aid in determining general heart rate trends.
35. Care must be taken when lifting or moving the treadmill so as not to injure your back. Always use proper lifting techniques and/or use assistance.
36. A safe key is supplied for personal safety. Use the safe key when operating the treadmill for the emergency dismount function. In the event of an emergency, place both hands on the handlebars and put your feet onto the non-slip surface of the main frame. As you do this, the safe key will disengage from the computer and the emergency dismount function will be triggered.
37. All moveable accessories require weekly maintenance. Check them before use every time. If anything is broken or loose, please fix it immediately. You may continue using the treadmill after any damaged parts have been fixed.

SAVE THESE INSTRUCTIONS

Assembly Steps

Please check the package list carefully before assembly.

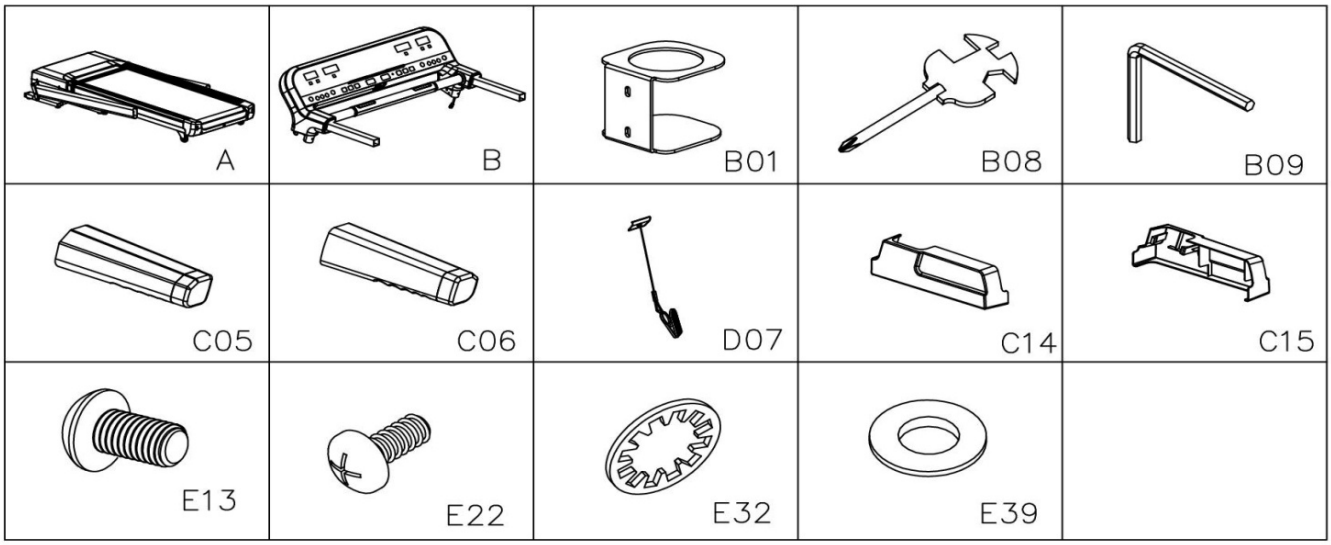

Package list:

NO.	Description	Specification	QTY		NO.	Description	Specification	QTY
A	Mainframe		1		D07	Safety key module		1
B	Monitor		1		C14	Left bottom cover		1
B01	Bottle holder		1		C15	Right bottom cover		1
B08	Cross solid wrench		1		E13	Bolt	M8*15	10
B09	5# Allen wrench		1		E22	Bolt	M5*12	6
C05	Left foam handlebar		1		E32	Lock washer	8	10
C06	Right foam handlebar		1		E39	Big flat washer	Φ5*φ13*1.0	4

Assembly tools:

5# Inner hex wrench	5mm	1pc
Cross solid wrench	S=13 14 15	1pc

Attention: please don`t switch on before finish assembling.

Step 1:

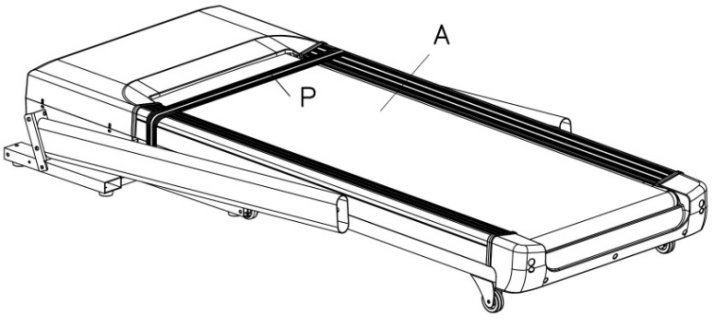

Open the package and put the mainframe A on the floor.

Attention: Don't open the packing belt (P) before set up of the treadmill.

Step 2:

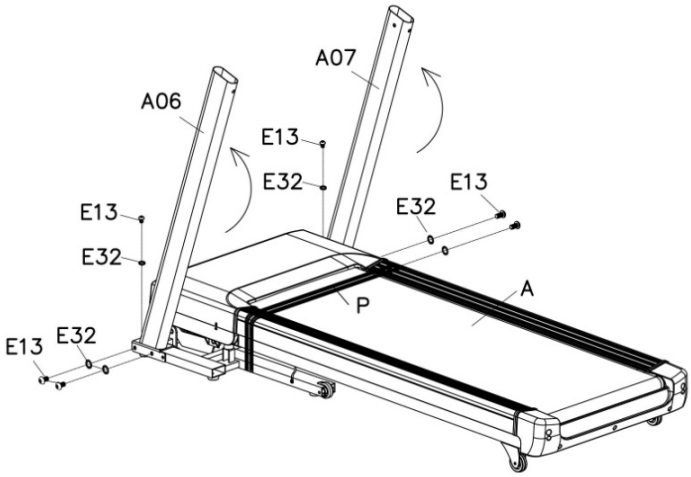

1. Lift up column A06,A07 first;
2. Fix the column A06 to the mainframe A with Bolt E13 and lock washer E32 by 5# Allen wrench B09 .
3. Fix the column A07 to the mainframe according to the steps above.

Attention:

ATTENTION: Support the column with hand to avoid falling down.

Step 3:

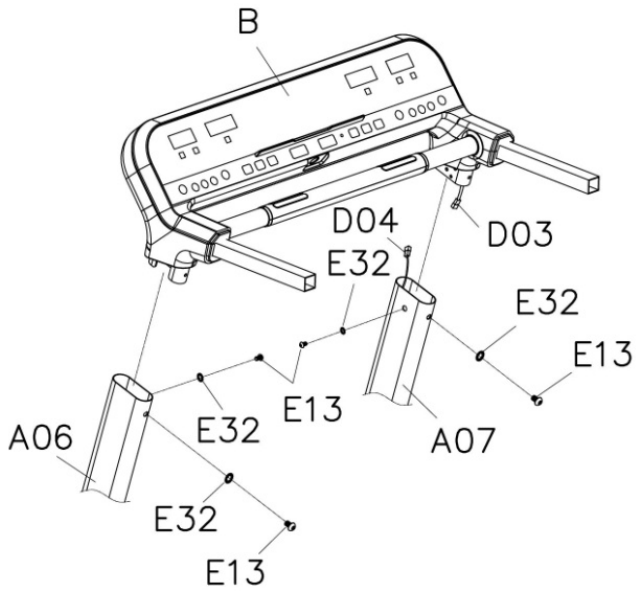

1. Connect the monitor cable D03 with D04.
2. Fix the monitor B to the left and right column A06\A07 with bolt E13 and lock washer E32 by 5# Allen wrench B09.

Attention: Please make sure cables are well connected before fasten.

Step 4:

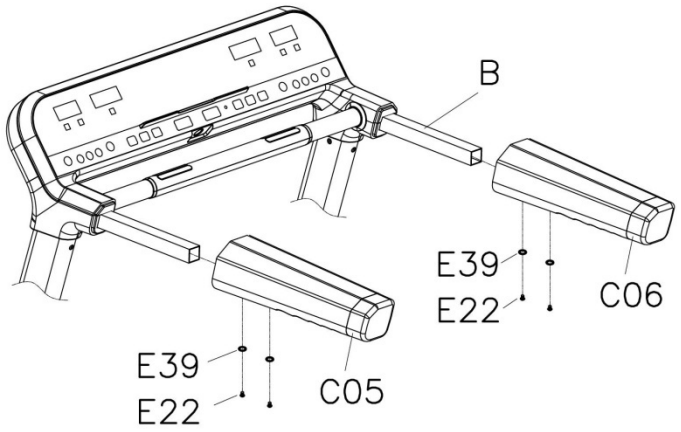

Fix the left and right foam handlebar C05\C06 to the monitor B with bolt E22 and big washer E39 by cross solid wrench B08

Step 5

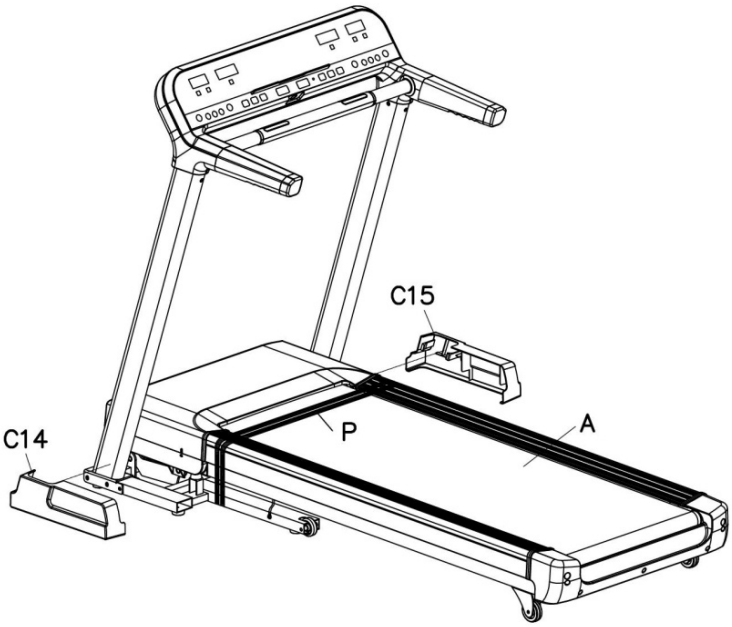

Fix the left and right bottom cover C14\C15 to the mainframe.

Attention: the structure of left and right bottom cover is buckle design. Please make sure all the buckles are securely fastened.

Step 6 :

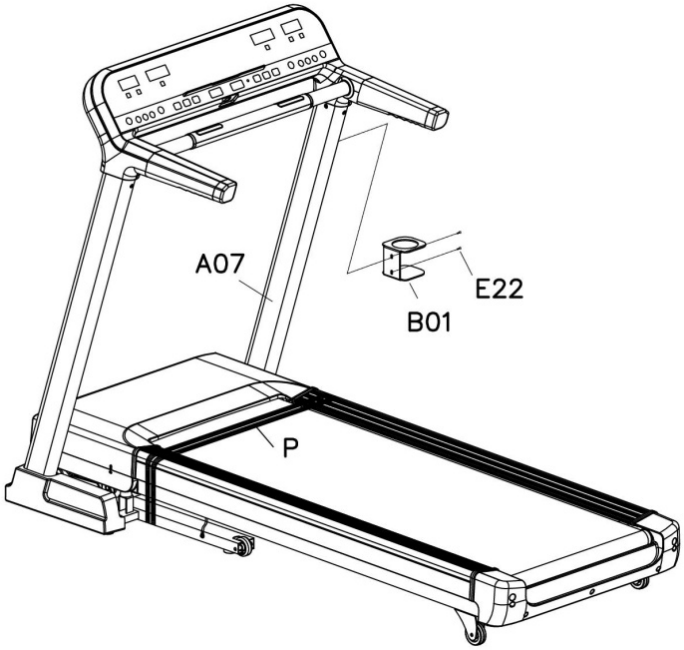

Fix the bottle holder B01 to the right column A07 with bolt E22 by solid cross solid wrench B08.

Step 7

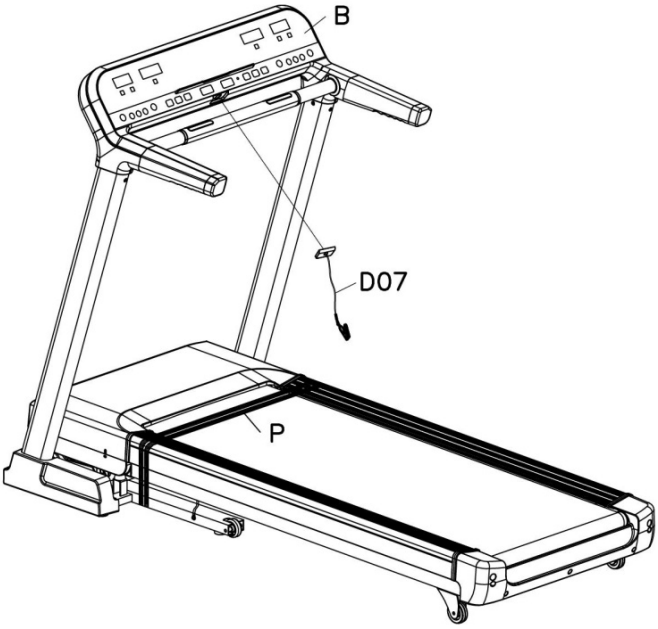

1. Cut off belt P;
2. Insert the safety key D07 into the monitor B.

How to use safety key

1. Before running, please nip the safety key clip D07 with your cloth.
2. For any emergency, please pull the safety key rope , and the machine will stop.

Step 8

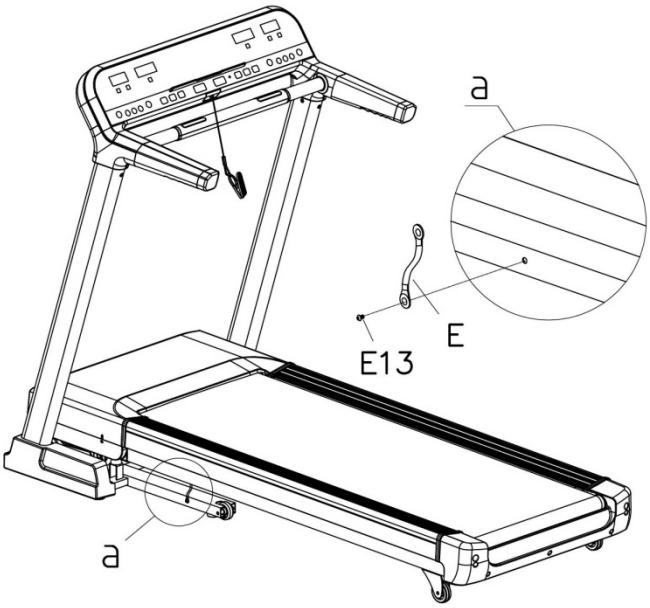

Take apart the bolt M8*15 (E13) in the bottom side of the steel cable (E) with 5# Allen wrench B09.

Step 9

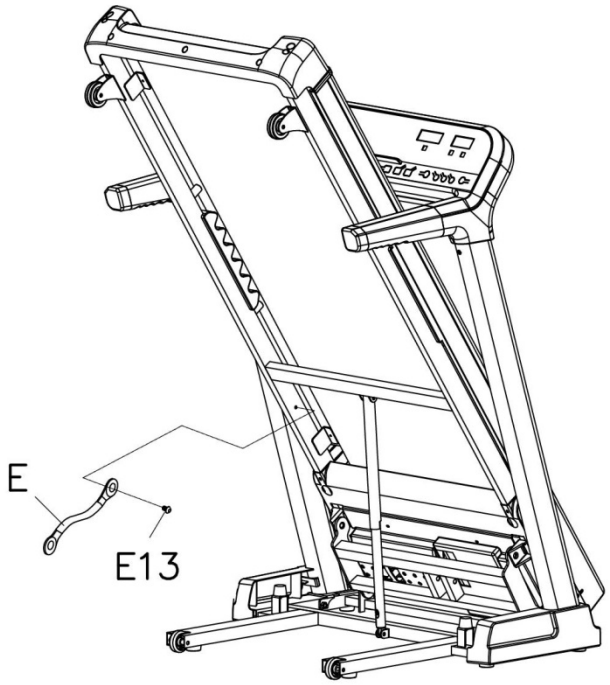

Take apart the bolt M8*15 (E13) in the top side of the steel cable (E) with 5# Allen wrench B09. Then take away the steel cable from the bottom frame.

Notice: The steel cable will ensure your safety during assembly; you can keep it for next use.

Foot pad adjustment instruction

You can balance the treadmill by adjusting the foot pad (B02) if the ground is uneven; Turn the foot pad (B02) to the left side by solid wrench (66) will increase the height and turn to the right side will decrease the height.

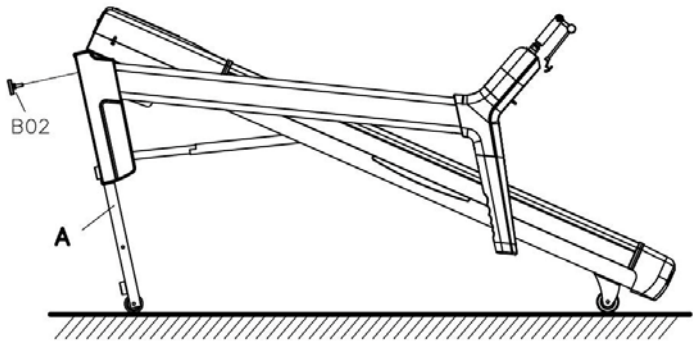

(a)

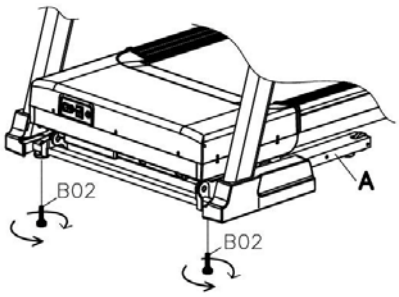

(b)

Folding steps

Folding up

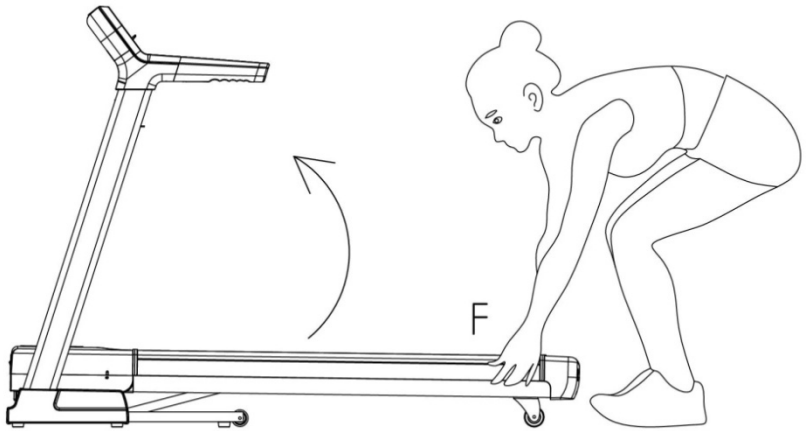

Hold the running deck which showed in “F” position and then fold it up with the arrow direction until you hear a “bang” voice from the air cylinder.

Attention: it is forbidden to fold up when the machine is in running or incline mode.

Folding down

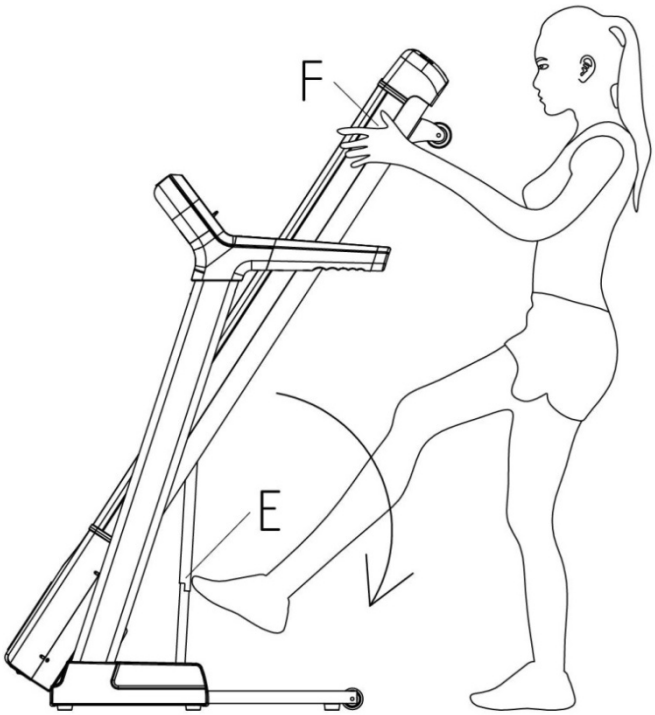

Support place F with hand, kick the place E of air pressure bar, then the base frame will fall down automatically

Transport tips

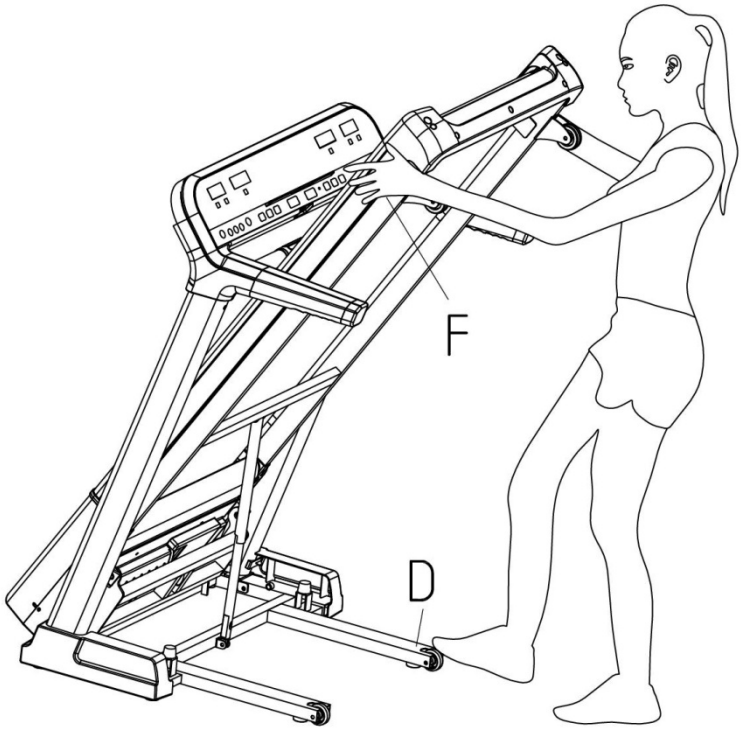

1. First hold the running board which showed in F position ;
2. Step onto the transportation wheel D ;
3. Pull the machine down;
4. And then move it freely.

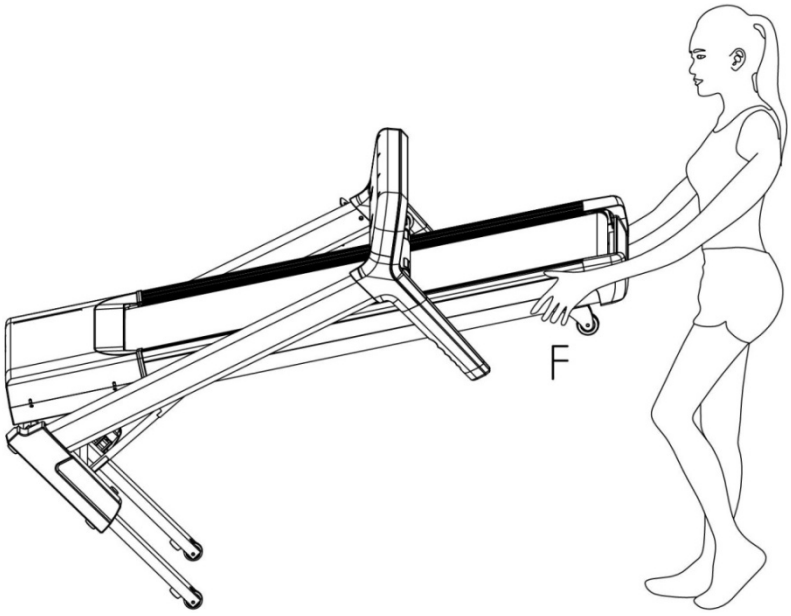

GROUNDING INSTRUCTIONS

This product must be grounded. If it should malfunction or breakdown, grounding provides a path of least resistance for electric current to reduce the risk of electric shock. This product is equipped with a cord having an equipment-grounding conductor and a grounding plug. The plug must be plugged into an appropriate outlet that is properly installed and grounded in accordance with all local codes and ordinances.

DANGER – Improper connection of the equipment-grounding conductor can result in a risk of electric shock.

Check with a qualified electrician or serviceman if you are in doubt as to whether the product is properly grounded. Do not modify the plug provided with the product – if it will not fit the outlet. Have a proper outlet installed by a qualified electrician.

This product is for use on a nominal 120-V circuit and has a grounding plug that looks like the plug illustrated in sketch A. Make sure that the product is connected to an outlet having the same configuration as the plug. No adapter should be used with this product.

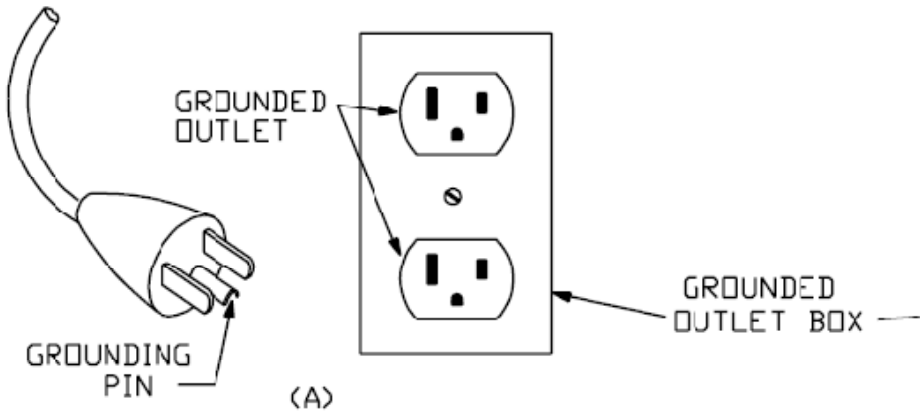

Operation introduction

1. Window Display

1) SPEED/ PULSE: usually it shows your current speed from 0.6-12.5mph; if you hold the pulse sensor for several seconds it shows your current pulse from 50-200/min. (this data is just for reference, cannot take as the medical data).

2) DISTANCE: In setting mode it shows: P1-P2…-P5…P7……P12--HP1-HP2, In FAT mode, it shows FAT. Usually it shows your current exercise distance. Displays the distance positive direction clock from 0.00-99.99, when up to 99.99, it will count again from 0; When count down, it will show from setting data to 0; When down to 0, the machine will stop smoothly and show ‘ End ’, enter into the initial situation after 5 seconds.

3) TIME: display your exercise time from 0-18 hour. when count to 18hour, the machine will stop smoothly and show ‘ End ‘, then enter into initial situation after 5 seconds; When count down, it will show from the setting time to 0:00, when down to 0:00 , the machine will stop smoothly and show ‘ End ’, and will enter into the initial situation.

4) CALORIES/INCLINE: generally it shows your exercise calorie from 0.0-999. When set inclination, it shows your current inclination from 0-15 sections, if there is not any operation, it will enter into calorie window after 30s.

2. Button function

1) START: start the machine anytime by pressing the button when the machine is switched on and the safety key is in correct position, and then the machine will start working in 3 seconds.

2) STOP: available for pause/stop function. When the machine is running, it will enter into pause mode after you press the STOP key, and the window will show PAU. In pause mode if you press START key, the machine will go on working, otherwise if you press STOP key, it will stop and all data will be swept off.

3) MODE: displays different mode. It can display 30:00 (time countdown mode), 1.0(distance countdown mode), 50 (calorie countdown mode), P1-P2…-P5…P7……P12 (preset program), HP1-HP2 (heart rate control program) in sequence. Once you choose a certain mode, the window will flash all the time. And then you can adjust the data by pressing -SPEED+ or -INCLINE + key. When finish setting, press START key and then the machine will begin to move. In MANUAL mode press the MODE key

you can enter into data set mode.

4) MANUAL: you can enter into P1, P2, P3, P4, and P5 simply by pressing MANUAL, WEIGHT LOSS, INTERVAL, HILL CLIMBM, WALK button directly. Once you press the button above, the time window displays 30:00, please adjust it by pressing INCLINE+、INCLINE -or SPEED+、SPEED-. Press START to begin exercise when you finish setting.

5) SPEED+, SPEED- which is for changing the speed. When you press the "-SPEED+" key lasting for 0.5 sec the speed data will change continuously.

6) INCLINE+、INCLINE- which is for changing the incline. When you press the "-incline+" key lasting for 0.5 sec the incline data will change continuously.

7) "INCLINE: 6 8 10" which is for choosing the incline directly.

8) "SPEED: 3 5 7 " which is for choosing the speed directly.

3. LUBRICATION REMIND FUNCTION

This machine has lubrication remind function. After every total running distance of 188 miles, your treadmill needs to be maintained with oil. The system will remind with sound of "BI-BI-BI" for every 10 seconds, and TIME window will show "OIL". This means that your treadmill needs to be lubricated with oil. Please read the user's manual first, and add the oil to the middle part of running board. After you finishing lubrication, please hold on "STOP" button for 3 seconds, and the system warning sound of "BI-BI-BI" will disappear.

4. Quick start

1) Switch on and put the safety key in correct position.

2) Press the "START" key and then the machine will work at a speed of 0.6mph after the beeper countdown from 3 to 1.

3) According to your need you can change the speed and incline by pressing "-SPEED+" and "-INCLINE+" separately.

5. Manual mode

1) Press the "START" key and then the machine will work at a speed of 0.6mph and all other windows will count from 0. Press the "-SPEED+" key to change the speed and the "-INCLINE+" key to change the incline.

2) In standby mode press the "MODE" key to enter into time countdown mode. "30:00" will be flashed displaying in the "TIME" window. Press the "-INCLINE+" or "-SPEED+" key to change the data from 5:00 to 99:00.

3) In time countdown mode press the "MODE" key to enter into distance countdown mode. "1.0" will be flashed displaying in the "DIST" window. Press the "-INCLINE+" or "-SPEED+" key to change the data from 0.5 to 99.9.

4) In distance countdown mode, press the "MODE" key to enter into calorie countdown mode, "50" will be flashed displaying in the "CAL" window. Press the "-INCLINE+" or "-SPEED+" key to change the data from 10 to 999.

5) Choose one of the three countdown mode and then press the “START” key and the machine will work after 3 sec. Press the “-INCLINE+” key to change the incline and the “-SPEED+” key to change the speed. Press the “STOP” key to shut off the machine.

6. Quick program mode

Press the quick program key and congratulations you have entering the program. Meanwhile the TIME window will display default data “30:00” and flash all the time. Press the “-INCLINE+” or “-SPEED+” key to adjust the exercising time that you need. In addition you can change the speed and incline by pressing the “-INCLINE+” or “-SPEED+” key when the column is in flashing mode. There are 15 stages each program. And each exercising time=set time/15 minutes. It will enter into the next program automatically when the previous one is finished. Meanwhile there will be 3 “Bi-Bi- Bi-” warning voices. The speed and incline will change accordingly to the program graphic. When the program is over, the incline will decrease to zero degree. During the program workout you can press STOP key or pull off the safety key to stop training. When a program is over, there will be 3 ““Bi-Bi- Bi-” warning voices. And after 5 seconds the machine will be in standby mode.

7. Program introduction

Each program is divided into 15 stages. And every stage has its own speed and incline.

stage / program		Set time/15 =exercise time of each stage														
		1	2	3	4	5	6	7	8	9	10	11	12	13	14	15
P1 (MANUAL)	Speed	1.8	1.8	1.8	1.8	1.8	1.8	1.8	1.8	1.8	1.8	1.8	1.8	1.8	1.8	1.8
	incline	2	2	2	2	2	2	2	2	2	2	2	2	2	2	2
P2 (WEIGHT LOSS)	Speed	1.8	1.8	3.7	3.7	1.8	1.8	1.8	3.7	3.7	1.8	1.8	1.8	3.7	3.7	1.8
	incline	2	2	4	4	4	4	4	4	4	4	4	4	2	2	2
P3 (INTERVAL)	Speed	1.8	5	5	1.8	1.8	5	5	1.8	1.8	5	5	1.8	1.8	5	5
	incline	2	2	4	4	6	6	6	6	4	4	4	4	2	2	2
P4 (HILL CLIMB)	Speed	1.8	3.1	3.7	5	6.2	5	3.7	1.8	1.8	3.7	5	6.2	5	3.7	3.1
	incline	2	2	4	4	6	6	6	6	4	4	4	4	2	2	2
P5 (WALK)	Speed	1.8	3.1	3.1	3.7	3.7	3.1	3.1	5	5	3.1	1.8	1.8	3.1	3.1	5
	incline	2	2	4	4	4	4	4	4	4	4	4	4	2	2	2
P6	Speed	1.2	2.5	2.5	2.5	3.1	3.7	5	5	3.7	4.3	5	5	3.7	2.5	1.2
	incline	0	5	5	5	4	4	4	3	3	3	3	4	4	4	0

P7	Speed	1.2	1.8	1.8	1.8	2.5	3.1	1.8	2.5	3.1	1.8	2.5	3.1	1.8	1.8	1.2
	incline	0	4	4	4	3	3	6	6	6	7	7	8	8	9	0
P8	Speed	1.2	1.8	1.8	3.7	4.3	4.3	2.5	3.7	4.3	2.5	3.7	4.3	2.5	2.5	1.2
	incline	0	5	5	5	6	6	6	7	8	9	9	9	10	10	0
P9	Speed	1.2	2.5	2.5	4.3	4.3	2.5	4.3	5	2.5	5	5.6	5.6	2.5	2.5	1.2
	incline	0	5	5	6	6	6	4	4	6	6	5	5	8	8	0
P10	Speed	1.2	2.5	3.1	3.7	4.3	3.1	2.5	3.7	5	5	3.7	3.7	3.1	2.5	1.2
	incline	0	6	6	6	7	5	8	8	4	4	4	5	5	8	0
P11	Speed	1.2	3.1	5	6.2	4.3	4.3	6.2	6.2	4.3	4.3	6.2	6.2	3.1	3.1	1.2
	incline	0	5	3	2	6	6	2	2	2	2	2	4	5	6	0
P12	Speed	1.2	2.5	5.6	5.6	3.1	5.6	3.1	5	3.1	5.6	4.3	3.1	3.1	4.3	1.2
	incline	0	2	3	2	3	5	5	0	0	2	3	5	7	3	0

8. Manual mode

User can set manual mode according to their need (only 1 program can be saved).

1) MANUAL SET

Press the MANUAL key to enter into MANUAL mode in the standby mode or press the MODE key until P1 appeared. And the TIME window will show “30:00” and flash all the time. You can change the time by pressing “incline+”、“incline -” or “speed+”、“speed -”. After set the time, press the MODE key to enter into the program setting. You can press “incline+”、“incline -” or “speed+”、“speed -”key to set the speed or incline of the first stage, than press MODE key for three seconds to enter into the next stage. And then repeat the above step to set the following stage till to the 15th stage. The data will be saved all the time unless you changed by yourself.

2) Manual program start

Press the MANUAL key to enter into MANUAL mode or press the MODE key until P1 appeared in the standby mode. When finish setting, press the START key to begin exercise.

3) Manual setting introduction

Each program is divided into 15 stages. When finish setting 15 stages please press the START key to begin exercise.

9. Body fat test

1) Press MODE key for more than 3 seconds, the distance window will show FAT which means body fat test mode. Press MODE key again to enter into data adjustment mode F-1、F-2、F-3、F-4、F-5 (F-1 SEX, F-2 AGE, F-3 HEIGHT, F-4 WEIGHT, F-5 BODY FAT TEST). Press "SPEED+"、"SPEED -" to set F-1 – F4, and then press " MODE" to set F-5, when the F5 window display "---", please grasp the hand pulse, the window will display your body fat index after 5-6 seconds.
2) After enter into body fat setting page, F-1 will be showed. 01 stands for male and 02 stands for female.
3) Press MODE key, displays F-2. Press the speed ± key to set the age from 10 to 99.
4) Press MODE key, displays F-3. Press the speed ± key to set the height from 40 to 80 inch.
5) Press MODE key, displays F-4. Press the speed ± key to set the weight from 44 to 330 Lbs.
6) Press MODE key, displays F-5. When the F5 window display "---", please grasp the hand pulse, the window will display your body fat index in 8 seconds.
7) The best body fat index is between 20 and 25. If the index less than 19 it means that you are a little thin; if the index between 26 and 29 it means that you are a little weight. If more than 30 it means that you are too fat (the following data is only for reference and can not be used as medical purpose).

F-1	sex	01-male	02-female
F-2	age	10-99	
F-3	height	40-80 inch	
F-4	weight	44-330 lbs	
F-5	FAT	≤19	Thin
		=(20---25)	Normal
		=(26---29)	A little weight
		≥30	Too fat

10. Heart rate control program:

HRC PARAMETER FORM(ONLY FOR REFERENCE)											
AGE	BPM			AGE				AGE			
	H	Default	L		H	Default	L		H	Default	L
15	195	123	123	35	176	111	111	58	154	97	97
16	194	122	122	36	175	110	110	59	153	97	97
17	193	122	122	37	174	110	110	60	152	96	96
18	192	121	121	38	173	109	109	61	151	95	95
19	191	121	121	39	172	109	109	62	150	95	95

20	190	120	120		40	171	108	108		63	149	94	94
21	189	119	119		41	170	107	107		64	148	94	94
22	188	119	119		42	169	107	107		65	147	93	93
23	187	118	118		43	168	106	106		66	146	92	92
24	186	118	118		44	167	106	106		67	145	92	92
25	185	117	117		45	166	105	105		68	144	91	91
26	184	116	116		46	165	104	104		69	143	91	91
27	183	116	116		47	164	103	103		70	143	90	90
28	182	115	115		48	163	103	103		71	142	90	89
29	181	115	115		49	162	103	103		72	141	90	89
30	181	114	114		50	162	102	102		73	140	90	88
31	180	113	113		51	161	101	101		74	139	90	88
32	179	113	113		52	160	101	101		75	138	90	87
33	178	112	112		53	159	100	100		76	137	90	86
34	177	112	112		54	158	100	100		77	136	90	86
					55	157	99	99		78	135	90	85
					56	156	98	98		79	134	90	85
					57	155	98	98		80	133	90	84

L-H:Min to Max heart rate available adjustment range：

1) Press “MODE” button until “HP1” or “HP2” （heart rate control program）appears in distance window, the max speed of program HP1 is 6.0mph, HP2 is 7.5 mph. Note: If you press “start” button under HRC mode, the system will recommend a heart rate control parameter to owner, and age is 30 years old, target heart rate is 114.

2) Press “MODE” button for three seconds to enter age setting. Time window will show default age of 30.Owner can press “INCLINE+”、“INCLINE -”、“SPEED+”、“SPEED -” button to choose actual age, and age range is from 15 to 80 years old.

3) After owner finish choice of age, press “MODE” button, system will recommend a suitable target hear rate and show in screen for owner’s reference. Owner can also press “INCLINE+”、“INCLINE -”、“SPEED+”、“SPEED -” button to choose expected target heart rate according to owner’s physical condition, and available option range is from 84 to195.

4) After owner finish option of age and target heart rate, press “MODE” to enter time setting. “TIME” window will show

preset time of 10:00, press “INCLINE+”、“INCLINE -”、“SPEED+”、“SPEED -” button to adjust time, and available range is from 10:00 to 99:00.

5) Press “MODE” button to enter startup standby mode or press “START” button directly to startup.

6) Under the operation of HRC program, “INCLINE+”、“INCLINE -”、“SPEED+”、“SPEED -” buttons are available to adjust speed and incline, but the system can also adjust speed and incline automatically to achieve owner’s target heart rate value.

7) The first 1 min of your running is warm-up, the system will not adjust speed and incline automatically, only manual adjustment is available in the first min. After 1 min, the system will add speed under frequency of 0.3mph each time, when the value reach 6.0mph or 7.5mph, and still have not achieved target heart rate value, system will add incline with frequency of 1 section each time in order to reach owner’s target heart rate value by improving amount of exercise, and incline and speed will not change until owner achieve target heart rate value. If there is no heart rate lasts for more than 30 seconds. The system will reduce the speed by 0.3mph and incline 1 section every 10 seconds until reducing to the lowest data.

Note: Heart rate control program can only be available when chest belt is used, and chest belt must stick closely to chest and skin.

11. Display range of each data

Item	Initial	Original data	Range	Display range
Time (min: sec)	0:00	30:00	5:00-99:00	0:00-99:00
Incline (step)	0	0	0-15	0-15
Speed (mph)	0.0	0.6	0.6-12.5	0.6-12.5
Distance (mile)	0	1.0	0.50-99.90	0.00-99.99
Heart rate (time/min)	P	N/A	N/A	50-200
Calorie (K)	0	50	10.0-999	0.0-999

12. USB chargeable function (optional)

The USB port is available for most of mobile devices to charge.

13. Mp3

It is available for Mp3 devices to play music. Please adjust the volume from your Mp3.

14. Energy saving mode

If there is not any operation in 10 munities, the machine will enter into energy saving mode. And do not show anything. You can wake the system by pressing any key.

15. power off

You can switch off at any time if you want to stop training and it won`t do any damage to the machine.

16. Attention:

1) Please check the power and the safety key is well or not before training.

2) If any accident happened during exercise, please pull off the safety immediately until it stop.

3) If there is something wrong with the machine, please connect the retailer as soon as possible. It`s not allowed to repair the equipment by layperson.

17. Simple Malfunction and Solution

1) There is no signal when power on

A、 First check whether the over load protector is open or not, if opened, please close it.

B、 Make sure the wire of the switch, over load protector and driver are connected well.

C、 Make sure the wire between the monitor and driver is connected well.

2) The display shows E01 after switch on.

   A. There something wrong with the signal cable. Please check each cable between display and the driver is ok or not.

   B. There are something wrong with the display component part, please replace the display.

   C. Replace the transformer.

3) The display shows E02 after switch on.

   A. Check the motor cable is ok or not, if not please reconnect the motor cable. If it does not work, please replace the motor.

   B. Check the controller whether there is any special smell. If so please replace the controller.

   C. Check whether the input voltage is correct or not. Please use the right input voltage.

4) The display shows E03 after switch on-----no sensor signal

   A. If the motor start working for about 5-8 seconds and then the monitor displays E03. E03 stands for there is no speed signal. Please check whether the speed sensor is connected well or not. In addition please check whether the sensor is broken or not.

   B. The sensor wire on the PCB board is broken, please replace the PCB board.

5) The display shows E04 after switch on.

   A. Please check whether the signal wire of the incline motor is ok or not, please pull of the connector and insert it again.

   B. Please check the connection of the AC wire of the incline motor is correct or not. Please check according to drawing.

   C. Please check whether the wire of the incline motor is broken or not, if it is broken please replace the wire or the incline motor.

   D. Replace the PCB board

   E. After checking all of the PCB, please press the LEARNING key to learn it again.

6) The display shows E05 after switch on-----overload protection

A. The load is too big, please reset.

B. Maybe some part is jammed which make the motor too heavy, so the machine cannot work. Please adjust the running belt or lubricate some oil.

C. Check the motor whether there is any special smell or overload currency sound. If so please replace the motor.

D. Check whether the PCB board is burnt or not, please replace the PCB board.

E. The IGBT on the PCB board is short circuit, please check the IGBT is ok or not by multi-meter. Please replace the PCB board.

7) The display shows E06 after switch on-open circuits of motor.

A. Reconnect the motor wire.

B. Replace the motor.

8) The display shows E08 after switch on-error in the memorizer 24C02

A. The memorizer IC is not well connected, please reconnect.

B. The memorizer IC is broken, please replace the IC.

9) The display shows E10 after switch on- Instantaneous short circuit of motor.

A. The torque of the control board is too big, please adjust the torque potentiometer to make the torque value smaller.

B. The motor is short circuit, please replace the motor.

C. The moving parts are shucked, please adjust and lubricate them with oil.

Tips for Stretching

- Begin with gradual mobility exercises of all the joints, i.e. simply rotate the wrists, bend the arm and roll your shoulders. This will allow the body's natural lubrication (synovial fluid) to protect the surface of the bones at these joints.
- Always warm up the body before stretching, as this increases blood flow around the body, which in turn makes the muscles more supple.
- Start with your legs, and work up the body.
- Each stretch should be held for at least 10 seconds (working up to 20 to 30 seconds) and usually repeated about 2 or 3 times.
- Do not stretch until it hurts. If there's any pain, ease off.
- Don't bounce. Stretching should be gradual and relaxed.
- Don't hold your breath during a stretch.
- Stretch after exercising to prevent muscles tightening up. Stretch at least three times a week to maintain flexibility.

Thigh Stretch:

- Stand on right leg and take hold of the left ankle with the left hand, drawing the foot up close behind to the hips.
- Keep back straight and knees together. Use a wall for balance if required.
- Hold for about 10 seconds.
- Repeat for the other leg.

Hamstring Stretch:

- Keep front leg straight, hands on bent leg (thigh). Push down and out until you begin to feel the stretch in back of knee (or straight leg).
- Keep knees unlocked and back straight.
- Hold for about 10 seconds.
- Repeat for other leg.

Calf Stretch:

- Stand with the back foot flat on the floor and transfer weight to the front foot.
- Hold for about 10 seconds.
- Repeat for other leg.
- Note: Keep your back and rear leg straight when performing this exercise.

Inner Thigh Stretch:

- Sit with the soles of your feet together and your knees outward. Pull your feet toward your groin area as far as possible.
- Hold for about 10 seconds.

User-Maintenance Instructions

Warning: Before cleaning the machine, please make sure the power has been switched off.

1. Cleaning: Wipe away the dust on the belt, running board and side footboard as excess dust may increase the frictional on the belt and cause damage to the machine. It is recommended to clean the machine once a month.
2. Lubrication:
   1) Lubrication is needed per 188 miles. The machine will sound the alarm “di di di ” and displays “OIL” to inform you to oil. Please lubricate the oil on the middle of the running belt.
   2) After lubrication press the STOP key for more than 3 seconds in standby mode and then the machine will sweep off the alarm and lubrication information.

   We suggest you lubricate the machine as the following method:

   People who use the treadmill less than 3 hours per week, please lubricate the machine per 6 months

   People who use the treadmill less than 3-5 hours per week, please lubricate the machine per 3 months
3. People who use the treadmill more than 5 hours per week, please lubricate the machine per 2 months
4. Running belt is off-center: The Running belt may become off-center after using for a period of time. First allow the machine to run by it-self and the belt may centralize automatically. If it does not centralize automatically, you can adjust the position of the belt by screwing the bolt shown in the images below. If the running belt has shifted to the right, you need to tighten the screw on the right of the belt or loosen the screw on the left. If the belt has moved to the left, do the opposite.
5. Belt Slipping: Please adjust bolts according to the diagram below. When adjusting the two sides make sure each adjustment is the same, on either side of the treadmill. We recommend adjusting by half a turn until the running belt does not slip or deviate. Avoid making the belt too tight as this may damage it.

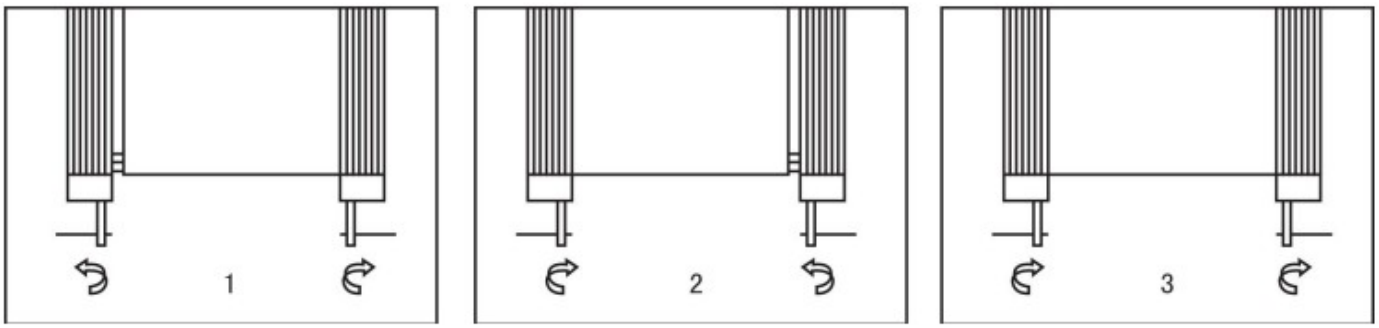

Attention: In order to prolong the lifespan of the treadmill, we suggest switch off the treadmill for about 10 minutes after 2 hours’ exercising. Running belt is too loose or tight will do harm to the treadmill. So keep a suitable tightness is very important. We suggest you grasp the running belt and pull it up to a certain distance until you cannot pull it up anymore. If the distance is between 50-75mm, we think the tightness of the running belt is suitable.

When this appliance not in use, please store this appliance and power cord in a dry location and confirm that the children can not play with the treadmill.

Explosive drawing

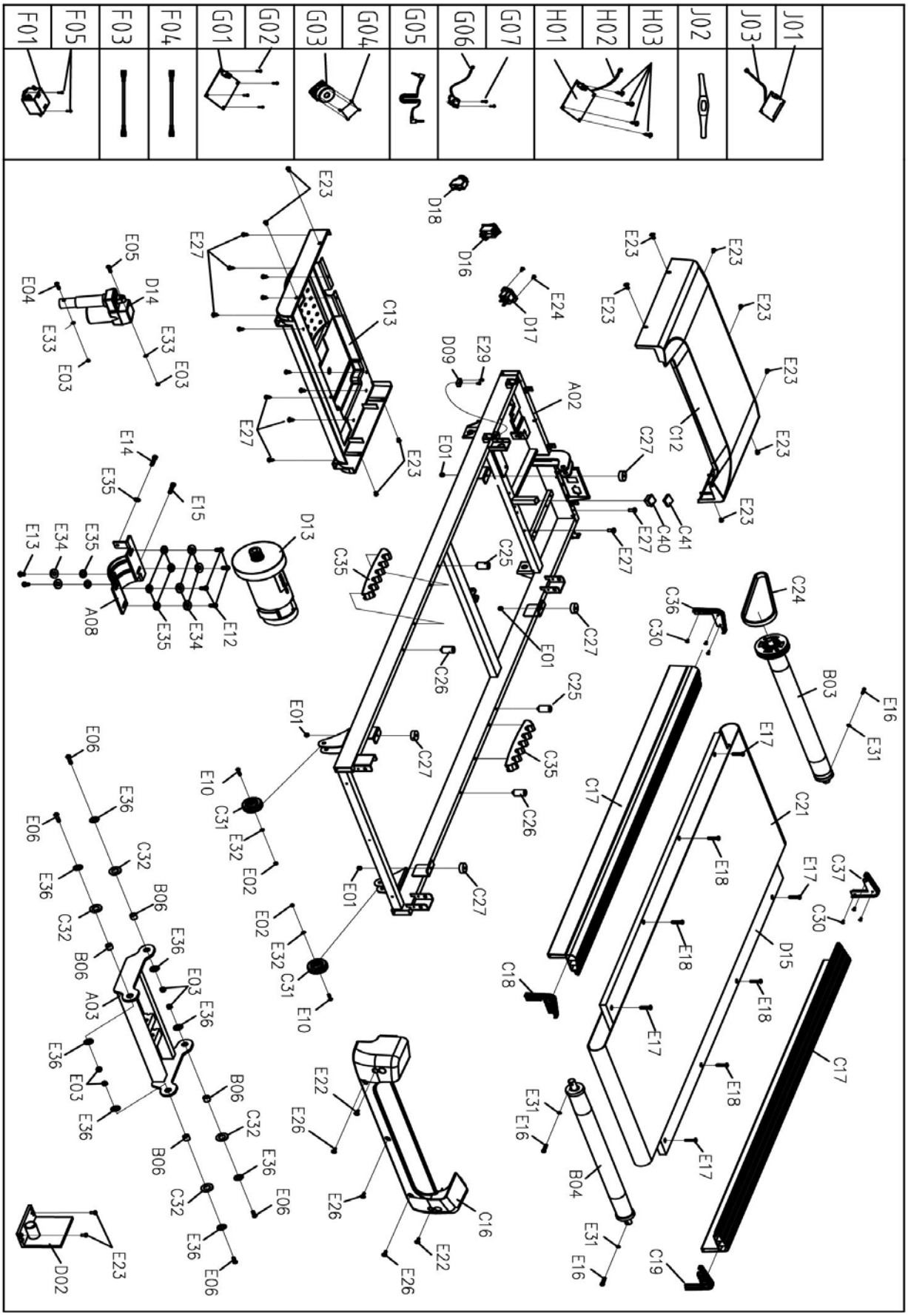

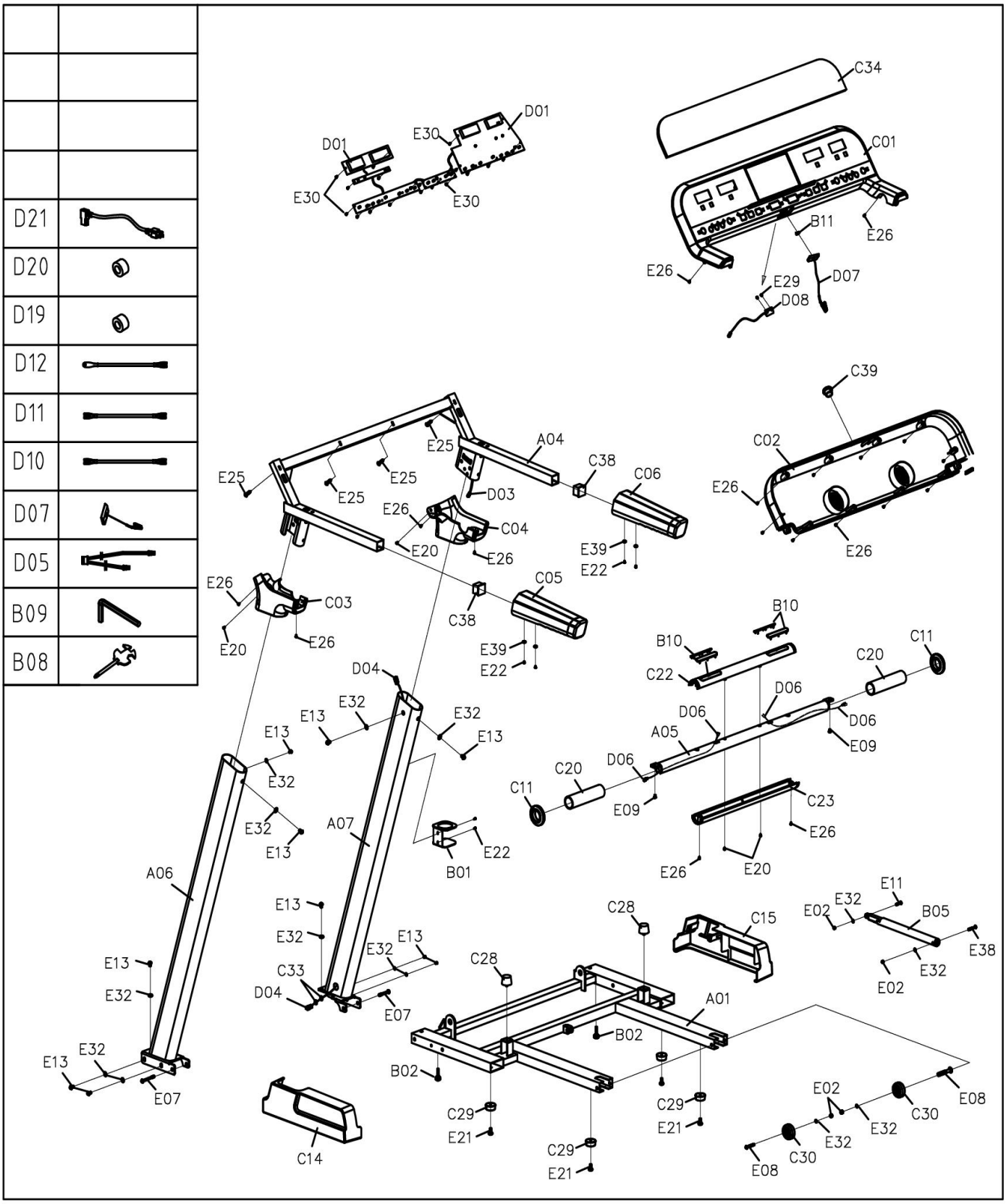
D21
D20
D19
D12
D11
D10
D07
D05
B09
B08
D01
E30
D01
E30
E30
C34
C01
B11
E26
E26
E29
D07
D08
C39
C02
E26
E26
E25
A04
C38
C06
E25
E25
E25
D03
E26
C04
E20
E26
E39
E22
E26
C03
E20
E26
C05
C38
E39
E22
B10
B10
C22
C11
C20
D06
D06
D06
A05
E09
D06
C20
C11
E09
C23
E26
E26
E20
D04
E32
E13
E32
E13
E13
E32
E32
E13
A07
B01
E22
A06
E13
E32
E32
E13
E13
E32
C33
D04
E07
C28
C28
C15
A01
B02
B02
E13
E32
E07
C29
E21
C29
E21
C29
E21
C14
E11
E02
E32
B05
E38
E32
E02
E02
E32
E32
C30
E08
E32
C30
E08

Part list

NO.	Description	Specification	QTY	NO.	Description	Specification	QTY
A01	Bottom frame		1	C19	Right side rail cap		2
A02	mainframe		1	C20	Foam		2
A03	Incline frame		1	C21	Running belt		1
A04	Monitor frame		1	C22	Top cover of the pulse		1
A05	Handlebar pulse frame		1	C23	Bottom cover of the pulse		1
A06	Left column		1	C24	Ribbed belt		1
A07	Right column		1	C25	Black cushion	ϕ 20* ϕ 6.5*30	2
A08	Motor seat		1	C26	Blue cushion	ϕ 20* ϕ 6.5*30	2
B01	Bottle holder		1	C27	Black cushion		2
B02	Adjustable foot pad		2	C28	cone-shaped cushion		2
B03	Front roller		1	C29	Flat foot pad		4
B04	Rear roller		1	C30	Transportation wheel		2
B05	Air cylinder		1	C31	Adjustable wheel		2
B06	Sleeve	φ15*φ10.2*13	4	C32	Plastic washer		4
B08	Cross solid wrench		1	C33	O ring		2
B09	Inner hex wrench		1	C34	Acrylic panel		1
B10	Handle pulse		4	C35	Cushion		2
B11	safety key seat		1	C36	Left anterior side rail cap		1
C01	Top cover of the monitor		1	C37	Right anterior side rail cap		1
C02	Bottom cover of the monitor		1	C38	End cap		2
C03	Left-bottom cover of the monitor		1	C39	Round cover		1
C04	Right-bottom cover of the monitor		1	D01	monitor		1
C05	Left foam handlebar		1	D02	Lower control board		1
C06	Right foam handlebar		1	D03	Upper wire of the monitor		1
C11	O ring		2	D04	Lower wire of the monitor		1
C12	Top cover of the motor		1	D05	Upper wire of the handle pulse		1
C13	Bottom cover of the motor		1	D06	Lower wire of the handle pulse		2
C14	Left bottom cover		1	D07	Safety key module		1
C15	Right bottom cover		1	D08	Safety key rope		1
C16	Rear protection cover		1	D09	Magnetic sensor		1
C17	Side rail		2	D10	AC single wire	brown 350mm	2
C18	Left side rail cap		2	D11	AC single wire	blue 350mm	3
				D12	Earth wire		1

NO.	Description	Specification	QTY	NO.	Description	Specification	QTY
D13	DC motor		1	E25	Screw	ST4.2*30	4
D14	Incline motor		1	E26	Screw	ST4.2*12	21
D15	Running board		1	E27	Screw	ST4.2*12	14
D16	Square Switch		1	E29	Screw	ST2.9*8	4
D17	Socket		1	E30	Screw	ST2.9*6.0	29
D18	Over load protector		1	E31	Lock washer	6	3
D19	Magnet ring		1	E32	Lock washer	8	16
D20	Magnet core		1	E33	Lock washer	10	2
D21	Power cable		1	E34	Spring washer	8	6
E01	Non-locked nut	M6	4	E35	Flat washer	8	7
E02	Lock nut	M8	6	E36	Big washer	φ10*φ26*2.0	8
E03	Lock nut	M10	6	E38	Bolt	M8*45	1
E04	Bolt	M10*90	1	E39	Big flat washer	φ5*φ13*1.0	4
E05	Bolt	M10*45	1	F01	Filter		1
E06	Bolt	M10*30	4	F03	AC single wire L500		1
E07	Bolt	M8*80	2	F04	Grounding wire L350		1
E08	Bolt	M8*70	2	F05	Screw ST4.2*12		2
E09	Bolt	M8*40	2	G01	Amplifier		1
E10	Bolt	M8*40	2	G02	Screw ST3.5*10		2
E11	Bolt	M8*30	1	G03	Speaker		2
E12	Bolt	M8*20	4	G04	Screw	ST2.9*6.0	8
E13	Bolt	M8*15	12	G05	MP3 wire		1
E14	Bolt	M8*40	1	G06	Audio plug wire		1
E15	Bolt	M8*35	1	G07	Screw ST2.9*8		2
E16	Bolt	M6*55	3	H01	Bluetooth module		1
E17	Bolt	M6*40	4	H02	Bluetooth connection wire		1
E18	Bolt	M6*25	4	J01	Heart rate receiver		1
E20	Screw	ST4.2*15	4	J02	Chest belt	optional	1
E21	Bolt	M5*16	4	J03	HRC connection wire		1
E22	Bolt	M5*12	8				
E23	Bolt	M5*8	13				
E24	Screw	ST2.9*8	2				