Report No.: DDT-R18120404-1E1

Issued Date: Jan. 07, 2019

FCC AND IC CERTIFICATION TEST REPORT

FOR

Applicant	:	International Leisure Products,Inc.
Address	:	191 Rodeo Drive Edgewood, NY 11717 U.S.A
Equipment under Test	:	RADIO CONTROL SWAN for model 91271, RADIO CONTROL FLAMINGO for model 91272, RADIO CONTROL DUCK for model 91273
Model No.	:	91271, 91272, 91273
Trade Mark	:	SWIMLINE
FCC ID	:	2AR8D912717273
IC	:	24670-91271272273
Manufacturer	:	International Leisure Products,Inc.
Address	:	191 Rodeo Drive Edgewood, NY 11717 U.S.A

Issued By: Dongguan Dongdian Testing Service Co., Ltd.

Add: No. 17, Zongbu Road 2, Songshan Lake Sci&Tech, Industry Park, Dongguan City, Guangdong Province, China, 523808

Tel: +86-0769-38826678, **E-mail:** ddt@dgddt.com, http://www.dgddt.com

REPORT

TABLE OF CONTENTS

Test report declares....4
1. Summary of test results....6
2. General test information....7
2.1. Description of EUT....7
2.2. Accessories of EUT....7
2.3. Assistant equipment used for test....7
2.4. Block diagram of EUT configuration for test....8
2.5. Test environment conditions....8
2.6. Deviations of test standard....8
2.7. Test laboratory....8
2.8. Measurement uncertainty....9
3. Equipment used during test....10
4. 20dB Bandwidth and 99% Bandwidth....11
4.1. Block diagram of test setup....11
4.2. Limits....11
4.3. Test Procedure....11
4.4. Test Result....11
4.5. Original test data....12
5. Radiated emission....13
5.1. Block diagram of test setup....13
5.2. Limit....14
5.3. Test Procedure....15
5.4. Test result....16
6. Band Edge Compliance....21
6.1. Block diagram of test setup....21
6.2. Limit....21
6.3. Test Procedure....21
6.4. Test result....21
7. Power Line Conducted Emission....26
7.1. Block diagram of test setup....26
7.2. Power Line Conducted Emission Limits....26
7.3. Test Procedure....26
7.4. Test Result....27
8. Antenna Requirements....28
8.1. Limit....28
8.2. Result....28

TEST REPORT DECLARE

Applicant	:	International Leisure Products,Inc.
Address	:	191 Rodeo Drive Edgewood, NY 11717 U.S.A
Equipment under Test	:	RADIO CONTROL SWAN for model 91271, RADIO CONTROL FLAMINGO for model 91272, RADIO CONTROL DUCK for model 91273
Model No.	:	91271, 91272, 91273
Trade mark	:	SWIMLINE
Manufacturer	:	International Leisure Products,Inc.
Address	:	191 Rodeo Drive Edgewood, NY 11717 U.S.A

Test Standard Used:

FCC Rules and Regulations Part 15 Subpart C, RSS-210 Issue 9 August 2016.

Test procedure used:

ANSI C63.10:2013, RSS-Gen Issue 5, Apr. 2018.

We Declare:

The equipment described above is tested by Dongguan Dongdian Testing Service Co., Ltd. and in the configuration tested the equipment complied with the standards specified above. The test results are contained in this test report and Dongguan Dongdian Testing Service Co., Ltd. is assumed of full responsibility for the accuracy and completeness of these tests.

After test and evaluation, our opinion is that the equipment provided for test compliance with the requirement of the above FCC&IC standards.

Report No:	DDT-R18120404-1E1		
Date of Receipt:	Dec. 05, 2018	**Date of Test:**	Dec. 05, 2018 ~ Jan. 07, 2019

Prepared By: ***Approved By:***

Ella Gong

Ella Gong/Engineer ***Damon Hu/EMC Manager***

Note: This report applies to above tested sample only. This report shall not be reproduced in parts without written approval of Dongguan Dongdian Testing Service Co., Ltd.

Revision history

Rev.	Revisions	Issue Date	Revised By
---	Initial issue	Jan. 07, 2019	

1. Summary of test results

The EUT have been tested according to the applicable standards as referenced below.		
Description of Test Item	**Standard**	**Results**
20dB Bandwidth and 99% Bandwidth	FCC Part 15: 15.215 ANSI C63.10:2013 RSS-210 Issue 9 RSS-Gen Issue 5	PASS
Radiated Emission	FCC Part 15: 15.209 FCC Part 15: 15.249 ANSI C63.10:2013 RSS-210 Issue 9 RSS-Gen Issue 5	PASS
Band Edge Compliance	FCC Part 15: 15.205 FCC Part 15: 15.249 ANSI C63.10:2013 RSS-210 Issue 9 RSS-Gen Issue 5	PASS
Power Line Conducted Emission	FCC Part 15: 15.207 ANSI C63.10:2013 RSS-Gen Issue 5	PASS
Antenna requirement	FCC Part 15: 15.203 RSS-Gen Issue 5	PASS

2. General test information

2.1. Description of EUT

EUT* Name	:	RADIO CONTROL SWAN for model 91271, RADIO CONTROL FLAMINGO for model 91272, RADIO CONTROL DUCK for model 91273
Model Number	:	91271, 91272, 91273
Difference of models	:	Their electrical circuit design, layout, components used and internal wiring are identical, only the appearance is different, so choose 91271 for testing
EUT function description	:	Please reference user manual of this device
Power supply	:	DC 6V 1.5V*4 AA batteries
Operation frequency	:	2420MHz-2465MHz
Modulation	:	GFSK
Antenna Type	:	Integral Antenna, maximum PK gain: 0 dBi
Sample Type	:	Series production

Note: EUT is the ab. of equipment under test.
EUT channels and frequencies list:

Channel	Frequency (MHz)	Channel	Frequency (MHz)	Channel	Frequency (MHz)
15	2420	31	2436	47	2452
16	2421	32	2437	48	2453
17	2422	33	2438	49	2454
18	2423	34	2439	50	2455
19	2424	35	2440	51	2456
20	2425	36	2441	52	2457
21	2426	37	2442	53	2458
22	2427	38	2443	54	2459
23	2428	39	2444	55	2460
24	2429	40	2445	56	2461
25	2430	41	2446	57	2462
26	2431	42	2447	58	2463
27	2432	43	2448	59	2464
28	2433	44	2449	60	2465
29	2434	45	2450		
30	2435	46	2451		

2.2. Accessories of EUT

Description of Accessories	Manufacturer	Model number	Serial No.	Other
N/A	N/A	N/A	N/A	N/A

2.3. Assistant equipment used for test

Assistant equipment	Manufacturer	Model number	Serial No.	Other

N/A	N/A	N/A	N/A	N/A

2.4. Block diagram of EUT configuration for test

Tx Mode:

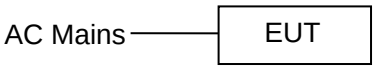

For Tx Mode, a special test firmware was installed in EUT and which can exercise the EUT work in continues RF test mode at specified test channel as below:

Tested mode, channel, information		
Mode	Channel	Frequency (MHz)
GFSK Tx mode	CH15	2420
	CH42	2447
	CH60	2465

2.5. Test environment conditions

During the measurement the environmental conditions were within the listed ranges:

Temperature range:	21-25℃
Humidity range:	40-75%
Pressure range:	86-106kPa

2.6. Deviations of test standard

No Deviation.

2.7. Test laboratory

Dongguan Dongdian Testing Service Co., Ltd.

Add: No. 17, Zongbu Road 2, Songshan Lake Sci&Tech, Industry Park, Dongguan City, Guangdong Province, China, 523808

Tel: +86-0769-38826678, http://www.dgddt.com, Email: ddt@dgddt.com

CNAS Accreditation No. L6451; A2LA Accreditation No. 3870.01

FCC Designation Number: CN1182; FCC Test Firm Registration Number: 540522

Industry Canada site registration number: 10288A-1

2.8. Measurement uncertainty

Test Item	Uncertainty
Bandwidth	1.1%
Peak Output Power (Conducted) (Spectrum analyzer)	0.86dB (10 MHz ≤ f < 3.6GHz);
	1.38dB (3.6GHz≤ f < 8GHz)
Peak Output Power (Conducted) (Power Sensor)	0.74dB
Power Spectral Density	0.74dB (10 MHz ≤ f < 3.6GHz);
	1.38dB (3.6GHz≤ f < 8GHz)
Conducted spurious emissions	0.86dB (10 MHz ≤ f < 3.6GHz);
	1.40dB (3.6GHz≤ f < 8GHz)
	1.66dB (8GHz≤ f < 22GHz)
Uncertainty for radio frequency (RBW<20kHz)	3×10^{-8}
Temperature	0.4℃
Humidity	2%
Uncertainty for Radiation Emission test (30MHz-1GHz)	4.70 dB (Antenna Polarize: V)
	4.84 dB (Antenna Polarize: H)
Uncertainty for Radiation Emission test (1GHz-18GHz)	4.10dB(1-6GHz)
	4.40dB (6GHz-18Gz)
Uncertainty for Power line conduction emission test	3.32dB (150kHz-30MHz)
Note: This uncertainty represents an expanded uncertainty expressed at approximately the 95% confidence level using a coverage factor of k=2.	

3. Equipment used during test

Equipment	Manufacturer	Model No.	Serial No.	Last Cal.	Cal. Interval
RF Connected Test (Tonscend RF Measurement System)					
Spectrum analyzer	R&S	FSU26	200071	Oct. 12, 2018	1 Year
Wideband Radio Communication tester	R&S	CMW500	117491	Jun. 29, 2018	1 Year
Vector Signal Generator	Agilent	E8267D	US49060192	Oct. 12, 2018	1 Year
Vector Signal Generator	Agilent	N5182A	MY48180737	Jun. 29, 2018	1 Year
Power Sensor	Agilent	U2021XA	MY55150010	Oct. 21, 2018	1 Year
Power Sensor	Agilent	U2021XA	MY55150011	Oct. 23, 2018	1 Year
DC Power Source	Ouyuan electronic technology co., LTD	ADC50-20	990406	Oct. 12, 2018	1 Year
Attenuator	Mini-Circuits	BW-S10W2	101109	Aug. 18, 2018	1 Year
RF Cable	Micable	C10-01-01-1	100309	Oct. 21, 2018	1 Year
Temp&Humi Programmable	ZHIXIANG	ZXGDJS-150L	ZX170110-A	Oct. 21, 2018	1 Year
Test Software	JS Tonscend	JS1120-3	Ver.2.7	N/A	N/A
Radiation 1#chamber					
EMI Test Receiver	R&S	ESU8	100316	Oct. 12, 2018	1 Year
Spectrum analyzer	Agilent	E4447A	MY50180031	Jun. 29, 2018	1 Year
Trilog Broadband Antenna	Schwarzbeck	VULB9163	9163-462	Nov. 09, 2018	1 Year
Active Loop antenna	Schwarzbeck	FMZB-1519	1519-038	Oct. 20, 2018	1 Year
Double Ridged Horn Antenna	R&S	HF907	100276	Nov. 16, 2018	1 Year
Broad Band Horn Antenna	Schwarzbeck	BBHA 9170	790	Oct. 25, 2018	1 Year
Pre-amplifier	TERA-MW	TRLA-0040 G35	101303	Oct. 12, 2018	1 Year
RF Cable	HUBSER	CP-X2+ CP-X1	W11.03+ W12.02	Oct. 21, 2018	1 Year
RF Cable	N/A	SMAJ-SMA J-1M+ 11M	17070133+17070131	Nov. 08, 2018	1 Year
MI Cable	HUBSER	C10-01-01-1 M	1091629	Oct. 21, 2018	1 Year
Test software	Audix	E3	V 6.11111b	N/A	N/A
Power Line Conducted Emissions Test					
Test Receiver	R&S	ESU8	100316	Oct. 12, 2018	1 Year
LISN 1	R&S	ENV216	101109	Oct. 12, 2018	1 Year
LISN 2	R&S	ESH2-Z5	100309	Oct. 12, 2018	1 Year
Pulse Limiter	R&S	ESH3-Z2	101242	Oct. 12, 2018	1 Year
CE Cable 1	HUBSER	ESU8/RF2	W10.01	Oct. 12, 2018	1 Year
Test software	Audix	E3	V 6.11111b	N/A	N/A

4. 20dB Bandwidth and 99% Bandwidth

4.1. Block diagram of test setup

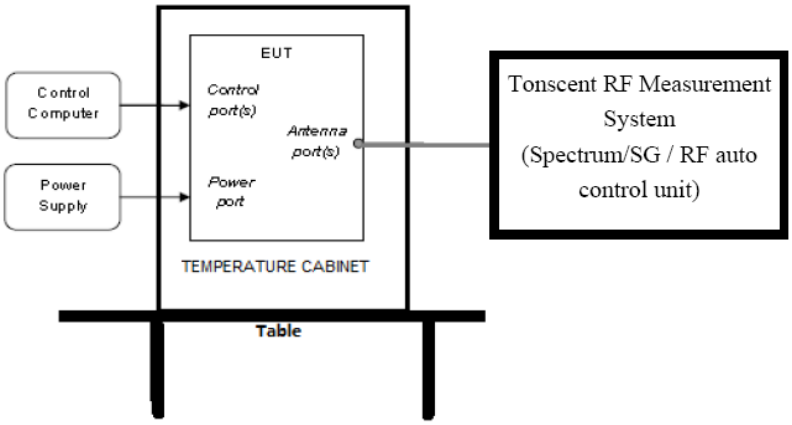

4.2. Limits

Intentional radiators operating under the alternative provisions to the general emission limits, as contained in § 15.217 through 15.257 and in Subpart E of this part, must be designed to ensure that the 20dB bandwidth of the emission, or whatever bandwidth may otherwise be specified in the specific rule section under which the equipment operates, is contained within the frequency band designated in the rule section under which the equipment is operated.

4.3. Test Procedure

(1) Connect EUT's antenna output to spectrum analyzer by RF cable.

(2) Set the spectrum analyzer as follows:

RBW:	100kHz
VBW:	300kHz
Detector Mode:	Peak
Sweep time:	auto
Trace mode	Max hold

(3) Allow the trace to stabilize, measure the 20dB and 99% bandwidth of signal.

4.4. Test Result

Mode	Freq (MHz)	20dB bandwidth Result (MHz)	99% bandwidth Result (MHz)	Limit (MHz)	Conclusion
GFSK	2420	9.455	9.455	/	PASS
	2447	7.948	7.820	/	PASS
	2465	6.571	6.442	/	PASS

4.5. Original test data

Bandwidth	
LCH 2420	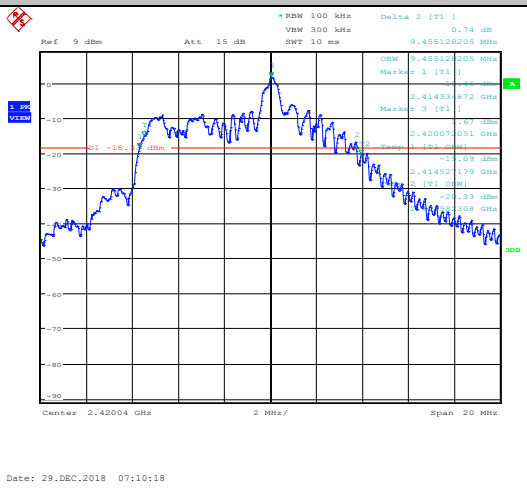
MCH 2447	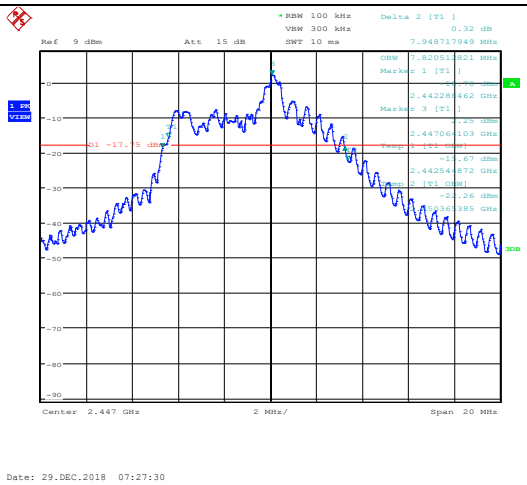
HCH 2465	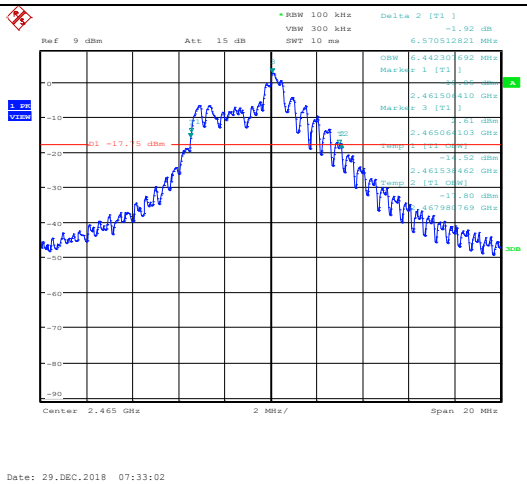

5. Radiated emission

5.1. Block diagram of test setup

In 3m Anechoic Chamber Test Setup Diagram for 9kHz-30MHz

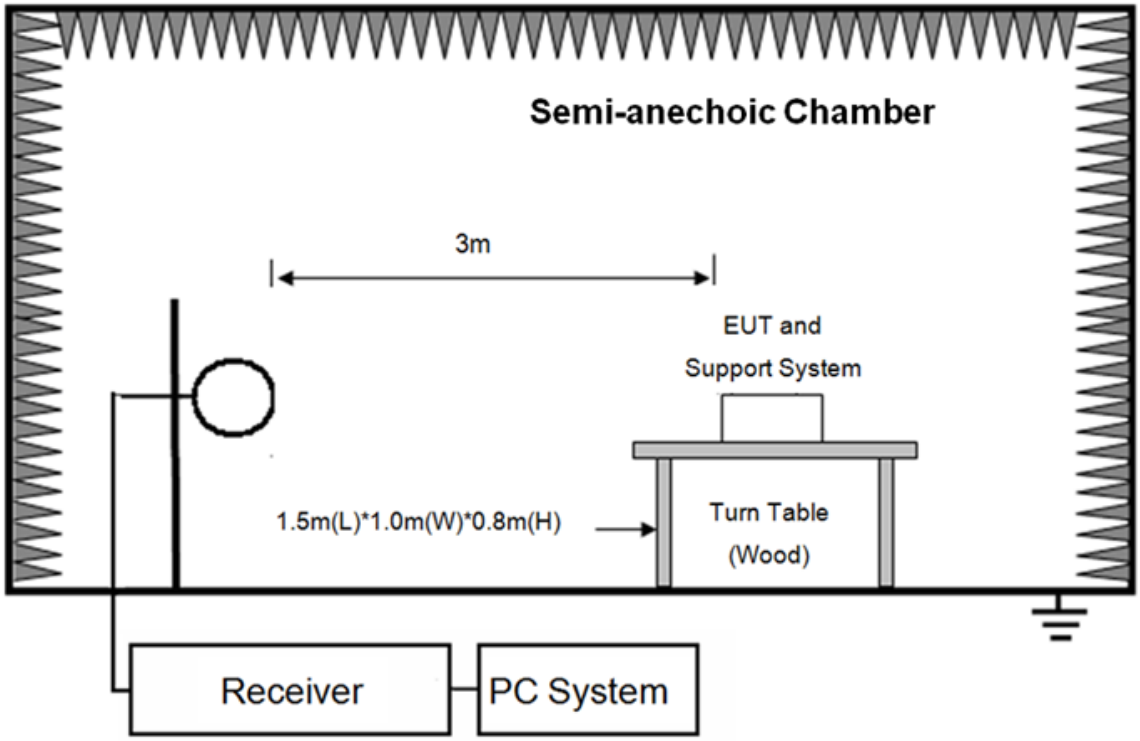

In 3m Anechoic Chamber Test Setup Diagram for 30MHz-1GHz

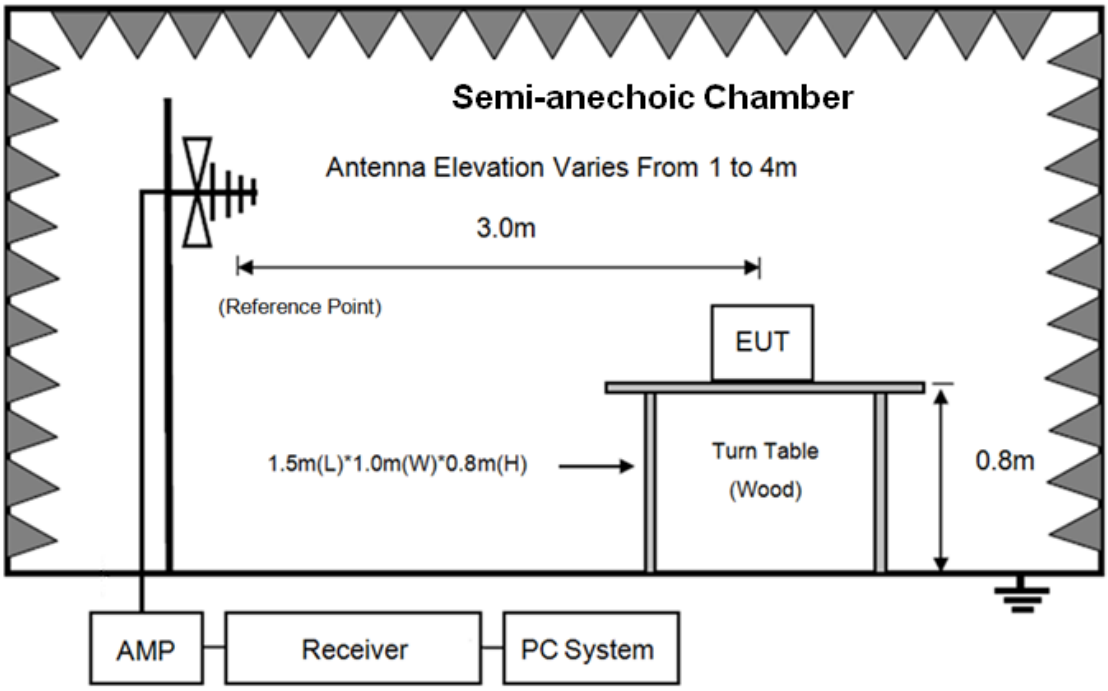

In 3m Anechoic Chamber Test Setup Diagram for frequency above 1GHz

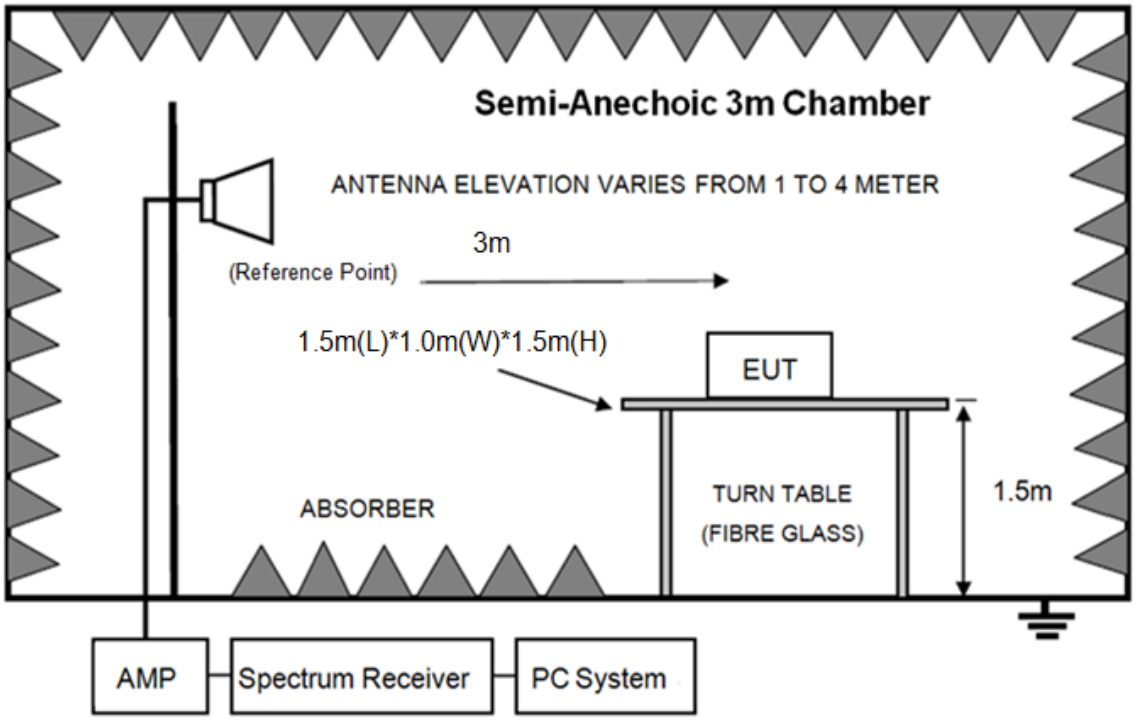

Note: For harmonic emissions test an appropriate high pass filter was inserted in the input port of AMP.

5.2. Limit

FREQUENCY MHz	DISTANCE Meters	FIELD STRENGTHS LIMIT	
		μV/m	dB(μV)/m
30 ~ 88	3	100	40.0
88 ~ 216	3	150	43.5
216 ~ 960	3	200	46.0
960 ~ 1000	3	500	54.0
Above 1000MHz	3	74.0 dB(μV)/m (Peak) 54.0 dB(μV)/m (Average)	
Field Strength of Fundamental emission for 2.4GHz-2.4835GHz	3	94.0 dB(μV)/m (Average) 114.0 dB(μV)/m(Peak)	
Field Strength of Harmonics	3	74.0 dB(μV)/m (Peak) 54.0 dB(μV)/m (Average)	

Remark:

(1) Emission level dBμV = 20 log Emission level μV/m

(2) The smaller limit shall apply at the cross point between two frequency bands.

(3) Distance is the distance in meters between the measuring instrument, antenna and the closest point of any part of the device or system.

(4) The emission limits shown in the above table are based on measurements employing a CISPR quasi-peak detector except for the frequency bands 9-90 kHz, 110-490 kHz and above 1000MHz, radiated emission limits in these three bands are based on measurements employing an average detector.

5.3. Test Procedure

(1) EUT was placed on a non-metallic table, 80 cm above the ground plane inside a semi-anechoic chamber.

(2) Setup EUT and assistant system according clause 2.3 and 4.2

(3) Test antenna was located 3m from the EUT on an adjustable mast. Below pre-scan procedure was first performed in order to find prominent radiated emissions.

(a) Change work frequency or channel of device if practicable.

(b) Change modulation type of device if practicable.

(c) Change power supply range from 85% to 115% of the rated supply voltage

(d) Rotated EUT though three orthogonal axes to determine the attitude of EUT arrangement produces highest emissions

(4) Spectrum frequency from 9kHz to 25GHz (tenth harmonic of fundamental frequency) was investigated, and no any obvious emission were detected from 9kHz to 30MHz and 18GHz to 25GHz, so below final test was performed with frequency range from 30MHz to 18GHz.

(5) For final emissions measurements at each frequency of interest, the EUT were rotated and the antenna height was varied between 1m and 4m in order to maximize the emission. Measurements in both horizontal and vertical polarities were made and the data was recorded. In order to find the maximum emission, the relative positions of equipment and all of the interface cables were changed according to ANSI C63.10 2013 on Radiated Emission test.

(6) For emissions from 30MHz to 1GHz, Quasi-Peak values were measured with EMI Receiver and the bandwidth of Receiver is 120 kHz.

(7) For emissions above 1GHz, both Peak and Average level were measured with Spectrum Analyzer, and the RBW is set at 1MHz, VBW is set at 3MHz for Peak measure; RBW is set at 1MHz, VBW is set at 10Hz for Average measure. Peak detector is used for both PK and AV test.

(8) For fundamental frequency test, set spectrum analyzer’s RBW=3MHz, VBW=10MHz. peak detector for PK, RMS detector for AV, Read the Level in spectrum analyzer and record.

5.4. Test result

PASS. (See below detailed test result)

All the emissions except fundamental emission from 9kHz to 25GHz were comply with 15.209 limit.

Note 1: According exploratory test no any obvious emission was detected from 9kHz to 30MHz and 18GHz to 25GHz, so the final test was performed with frequency range from 30MHz to 18GHz and recorded in below.

Note 2: For emissions below 1GHz, according exploratory explorer test, when change Tx mode and channel, have no distinct influence on emissions level, so for emissions below 1GHz, the final test was only performed with EUT working in GFSK, Tx 2420MHz mode.

Note 3: For emissions above 1GHz. If peak results comply with AV limit, AV Result is deemed to comply with AV limit.

Field Strength of the Fundamental Signal

Peak value:

Freq. (MHz)	Read level (dBµV)	Antenna Factor (dB/m)	PRM Factor(dB)	Cable Loss (dB)	Result Level (dBµV/m)	Limit (dBµV/m)	Margin (dB)	Detector type	Polarization
2420.00	90.70	29.17	44.19	4.67	80.35	114.00	-33.65	Peak	HORIZONTAL
2420.00	96.79	29.17	44.19	4.67	86.44	114.00	-27.56	Peak	VERTICAL
2447.00	91.08	29.20	44.20	4.74	80.82	114.00	-33.18	Peak	HORIZONTAL
2447.00	96.25	29.20	44.20	4.74	85.99	114.00	-28.01	Peak	VERTICAL
2465.00	101.53	29.23	44.21	4.81	91.36	114.00	-22.64	Peak	HORIZONTAL
2465.00	94.16	29.23	44.21	4.81	83.99	114.00	-30.01	Peak	VERTICAL
Result: Pass									

Average value:

Freq. (MHz)	Read level (dBµV)	Antenna Factor (dB/m)	PRM Factor(dB)	Cable Loss (dB)	Result Level (dBµV/m)	Limit (dBµV/m)	Margin (dB)	Detector type	Polarization
2420.00	81.70	29.17	44.19	4.67	71.35	94.00	-22.65	Average	HORIZONTAL
2420.00	87.79	29.17	44.19	4.67	77.44	94.00	-16.56	Average	VERTICAL
2447.00	83.08	29.20	44.20	4.74	72.82	94.00	-21.18	Average	HORIZONTAL
2447.00	87.25	29.20	44.20	4.74	76.99	94.00	-17.01	Average	VERTICAL
2465.00	102.48	27.32	44.32	5.20	90.68	94.00	-3.32	Average	HORIZONTAL
2465.00	85.16	29.23	44.21	4.81	74.99	94.00	-19.01	Average	VERTICAL
Result: Pass									

Note: Result Level = Read Level + Antenna Factor + Cable loss - PRM Factor.

Radiated Emission test (below 1GHz)

TR-4-E-009 Radiated Emission Test Result

Test Site	: DDT 3m Chamber 1#	D:\2018 RE1# Report Data\Q18120404-1E 91271\FCC BELOW1G.EM6	
Test Date	: 2019-01-04	**Tested By**	: Talent
EUT	: RADIO CONTROL SWAN	**Model Number**	: 91271
Power Supply	: Battery	**Test Mode**	: TX mode
Condition	: Temp:24.5'C,Humi:55%,Press:100.1kPa	**Antenna/Distance**	: 2018 VULB 9163 1#/3m/VERTICAL
Memo	:		

Data: 1

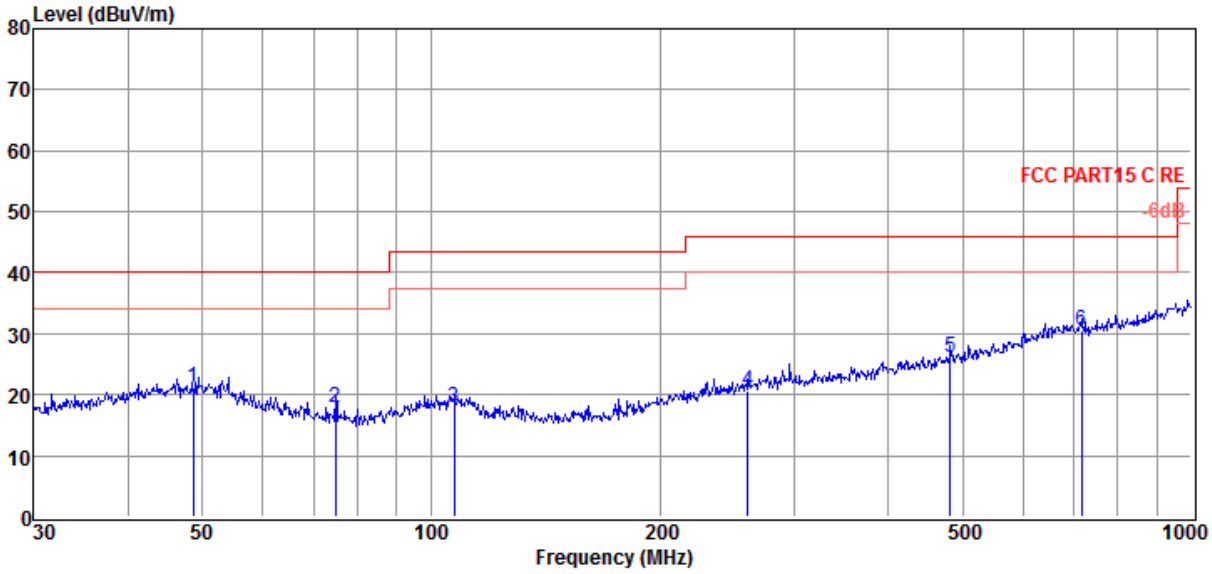

Item (Mark)	Freq. (MHz)	Read Level (dBµV)	Antenna Factor (dB/m)	Cable Loss dB	Result Level (dBµV/m)	Limit Line (dBµV/m)	Over Limit (dB)	Detector	Polarization
1	48.67	2.94	14.46	3.86	21.26	40.00	-18.74	QP	VERTICAL
2	74.92	4.68	9.19	4.05	17.92	40.00	-22.08	QP	VERTICAL
3	107.13	1.86	11.77	4.24	17.87	43.50	-25.63	QP	VERTICAL
4	261.06	2.36	13.11	5.04	20.51	46.00	-25.49	QP	VERTICAL
5	482.22	3.52	16.86	5.77	26.15	46.00	-19.85	QP	VERTICAL
6	716.68	3.85	20.21	6.42	30.48	46.00	-15.52	QP	VERTICAL

Note: 1. Result Level = Read Level + Antenna Factor + Cable loss.
2. If Peak Result complies with QP limit, QP Result is deemed to comply with QP limit.
3. Test setup: RBW: 120 kHz, VBW: 300 kHz, Sweep time: auto.

TR-4-E-009 Radiated Emission Test Result

Test Site	: DDT 3m Chamber 1#	D:\2018 RE1# Report Data\Q18120404-1E 91271\FCC BELOW1G.EM6	
Test Date	: 2019-01-04	**Tested By**	: Talent
EUT	: RADIO CONTROL SWAN	**Model Number**	: 91271
Power Supply	: Battery	**Test Mode**	: TX mode
Condition	: Temp:24.5'C,Humi:55%,Press:100.1kPa	**Antenna/Distance**	: 2018 VULB 9163 1#/3m/HORIZONTAL
Memo	:		

Data: 2

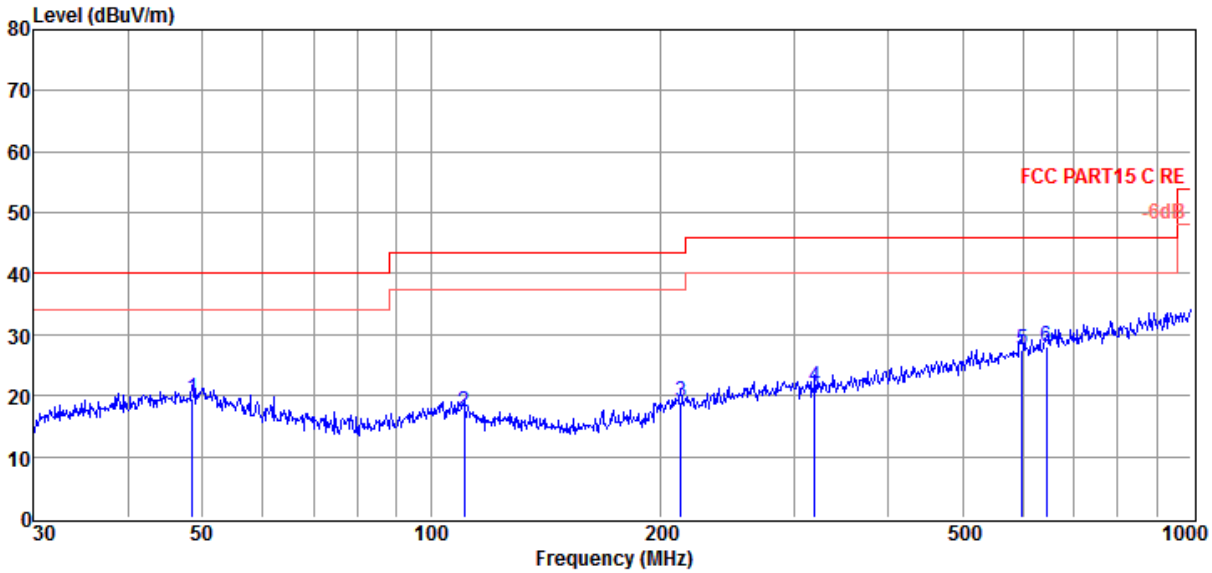

Item (Mark)	Freq. (MHz)	Read Level (dBµV)	Antenna Factor (dB/m)	Cable Loss dB	Result Level (dBµV/m)	Limit Line (dBµV/m)	Over Limit (dB)	Detector	Polarization
1	48.50	1.31	14.44	3.86	19.61	40.00	-20.39	QP	HORIZONTAL
2	110.57	1.31	11.68	4.26	17.25	43.50	-26.25	QP	HORIZONTAL
3	213.02	2.36	11.80	4.86	19.02	43.50	-24.48	QP	HORIZONTAL
4	319.94	1.76	14.36	5.26	21.38	46.00	-24.62	QP	HORIZONTAL
5	599.32	3.02	18.49	6.09	27.60	46.00	-18.40	QP	HORIZONTAL
6	645.12	2.55	19.25	6.22	28.02	46.00	-17.98	QP	HORIZONTAL

Note: 1. Result Level = Read Level + Antenna Factor + Cable loss.
2. If Peak Result complies with QP limit, QP Result is deemed to comply with QP limit.
3. Test setup: RBW: 120 kHz, VBW: 300 kHz, Sweep time: auto.

Radiated Emission test (above 1GHz)

Freq. (MHz)	Read level (dBμV)	Antenna Factor (dB/m)	PRM Factor(dB)	Cable Loss (dB)	Result Level (dBμV/m)	Limit (dBμV/m)	Margin (dB)	Detector type	Polarization
GFSK Tx mode 2420MHz									
3805.00	47.90	32.60	44.40	8.11	44.21	74.00	-29.79	Peak	HORIZONTAL
4434.00	48.90	33.51	44.31	9.80	47.90	74.00	-26.10	Peak	HORIZONTAL
5743.00	51.78	34.50	44.05	11.30	53.53	74.00	-20.47	Peak	HORIZONTAL
6236.00	46.88	34.99	43.88	12.12	50.11	74.00	-23.89	Peak	HORIZONTAL
7307.00	47.84	35.79	43.38	12.71	52.96	74.00	-21.04	Peak	HORIZONTAL
3465.00	48.99	32.04	44.40	6.95	43.58	74.00	-30.42	Peak	VERTICAL
4468.00	48.27	33.56	44.30	9.93	47.46	74.00	-26.54	Peak	VERTICAL
5131.00	47.92	34.01	44.17	10.33	48.09	74.00	-25.91	Peak	VERTICAL
6168.00	46.51	34.91	43.91	11.97	49.48	74.00	-24.52	Peak	VERTICAL
6865.00	46.74	35.52	43.58	12.33	51.01	74.00	-22.99	Peak	VERTICAL
GFSK Tx mode 2447MHz									
3499.00	49.95	32.10	44.40	7.04	44.69	74.00	-29.31	Peak	HORIZONTAL
4893.00	53.27	33.84	44.22	9.92	52.81	74.00	-21.19	Peak	HORIZONTAL
5607.00	48.32	34.39	44.07	11.18	49.82	74.00	-24.18	Peak	HORIZONTAL
6797.00	47.83	35.48	43.61	12.35	52.05	74.00	-21.95	Peak	HORIZONTAL
7613.00	47.09	35.99	43.26	13.09	52.91	74.00	-21.09	Peak	HORIZONTAL
3516.00	49.10	32.13	44.40	7.08	43.91	74.00	-30.09	Peak	VERTICAL
4536.00	48.33	33.62	44.29	9.95	47.61	74.00	-26.39	Peak	VERTICAL
5539.00	47.46	34.33	44.09	11.02	48.72	74.00	-25.28	Peak	VERTICAL
6729.00	47.13	35.44	43.64	12.15	51.08	74.00	-22.92	Peak	VERTICAL
7494.00	47.61	35.90	43.30	13.16	53.37	74.00	-20.63	Peak	VERTICAL
GFSK Tx mode 2465MHz									
3941.00	47.12	32.81	44.40	8.52	44.05	74.00	-29.95	Peak	HORIZONTAL
4927.00	52.40	33.86	44.21	9.85	51.90	74.00	-22.10	Peak	HORIZONTAL
6219.00	46.97	34.97	43.89	12.20	50.25	74.00	-23.75	Peak	HORIZONTAL
6814.00	46.24	35.49	43.60	12.35	50.48	74.00	-23.52	Peak	HORIZONTAL
7902.00	47.55	36.22	43.14	13.80	54.43	74.00	-19.57	Peak	HORIZONTAL
4094.00	48.81	33.04	44.38	9.29	46.76	74.00	-27.24	Peak	VERTICAL
5284.00	47.37	34.13	44.14	10.46	47.82	74.00	-26.18	Peak	VERTICAL
5607.00	48.96	34.39	44.07	11.18	50.46	74.00	-23.54	Peak	VERTICAL
6491.00	46.97	35.29	43.75	11.92	50.43	74.00	-23.57	Peak	VERTICAL
7341.00	46.69	35.81	43.37	12.84	51.97	74.00	-22.03	Peak	VERTICAL
Result: Pass									

Note 1: Result Level = Read Level + Antenna Factor + Cable loss - PRM Factor.

2: For emissions above 1GHz. If peak results comply with AV limit, AV Result is deemed to comply with AV limit.

6. Band Edge Compliance

6.1. Block diagram of test setup

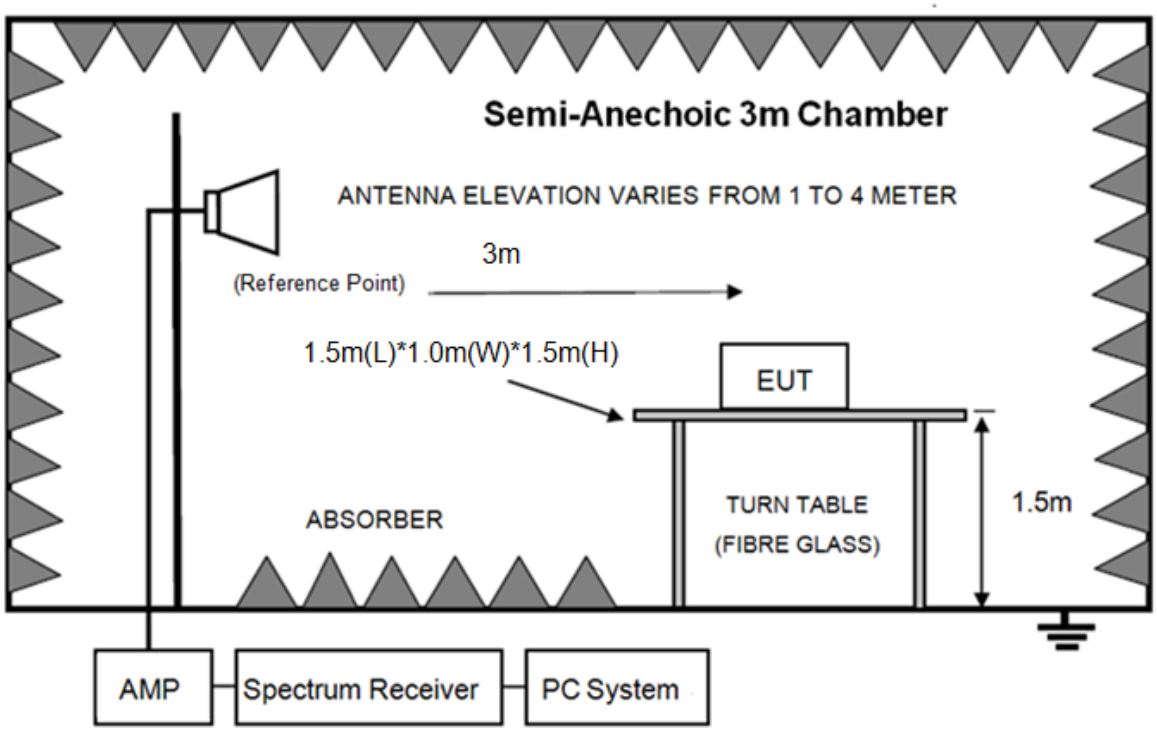

6.2. Limit

All the lower and upper band-edges emissions appearing within 2310MHz to 2390MHz and 2483.5MHz to 2500MHz restricted frequency bands shall not exceed the limits shown in 15.209, all the other emissions outside operation frequency band 2400MHz to 2483.5MHz and 5725MHz to 5850MHz shall be at least 20dB below the fundamental emissions, or comply with 15.209 limits.

6.3. Test Procedure

Same with clause 8.3 except change investigated frequency range from 2310MHz to 2425MHz and 2455MHz to 2500MHz.

Remark: All restriction band have been tested, and only the worst case is shown in report.

6.4. Test result

PASS. (See below detailed test result)

TR-4-E-009 Radiated Emission Test Result

Test Site	: DDT 3m Chamber 1#	D:\2018 RE1# Report Data\Q18120404-1E 91271\FCC ABOVE1G.EM6	
Test Date	: 2019-01-03	**Tested By**	: Talent
EUT	: RADIO CONTROL SWAN	**Model Number**	: 91271
Power Supply	: Battery	**Test Mode**	: Tx mode
Condition	: Temp:24.5'C,Humi:55%,Press:100.1kPa	**Antenna/Distance**	: 2018 HF 907/3m/VERTICAL
Memo	: 2420		

Data: 3

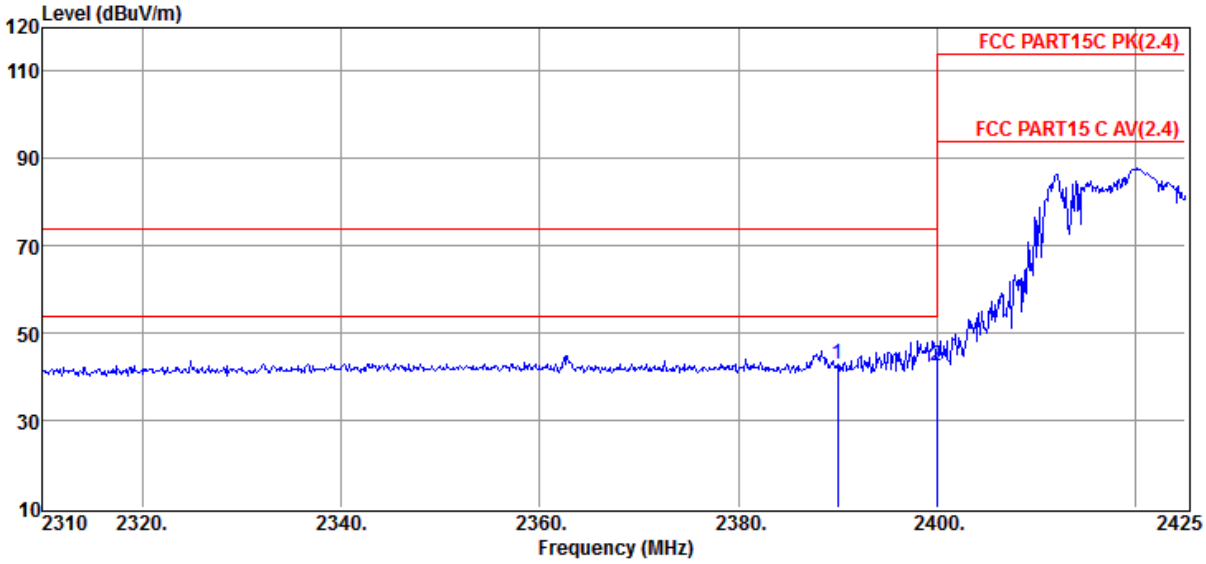

Item (Mark)	Freq. (MHz)	Read Level (dBµV)	Antenna Factor (dB/m)	PRM Factor dB	Cable Loss dB	Result Level (dBµV/m)	Limit Line (dBµV/m)	Over Limit (dB)	Detector	Polarization
1	2390.00	53.59	29.10	44.18	4.56	43.07	74.00	-30.93	Peak	VERTICAL
2	2400.00	52.89	29.12	44.18	4.56	42.39	74.00	-31.61	Peak	VERTICAL

Note: 1. Result Level = Read Level + Antenna Factor + Cable loss - PRM Factor.
2. If Peak Result complies with AV limit, AV Result is deemed to comply with AV limit.
3. Test setup: RBW: 1 MHz, VBW: 3 MHz, Sweep time: auto.

TR-4-E-009 Radiated Emission Test Result

Test Site	: DDT 3m Chamber 1#	D:\2018 RE1# Report Data\Q18120404-1E 91271\FCC ABOVE1G.EM6	
Test Date	: 2019-01-03	**Tested By**	: Talent
EUT	: RADIO CONTROL SWAN	**Model Number**	: 91271
Power Supply	: Battery	**Test Mode**	: Tx mode
Condition	: Temp:24.5'C,Humi:55%,Press:100.1kPa	**Antenna/Distance**	: 2018 HF 907/3m/HORIZONTAL
Memo	: 2420		

Data: 4

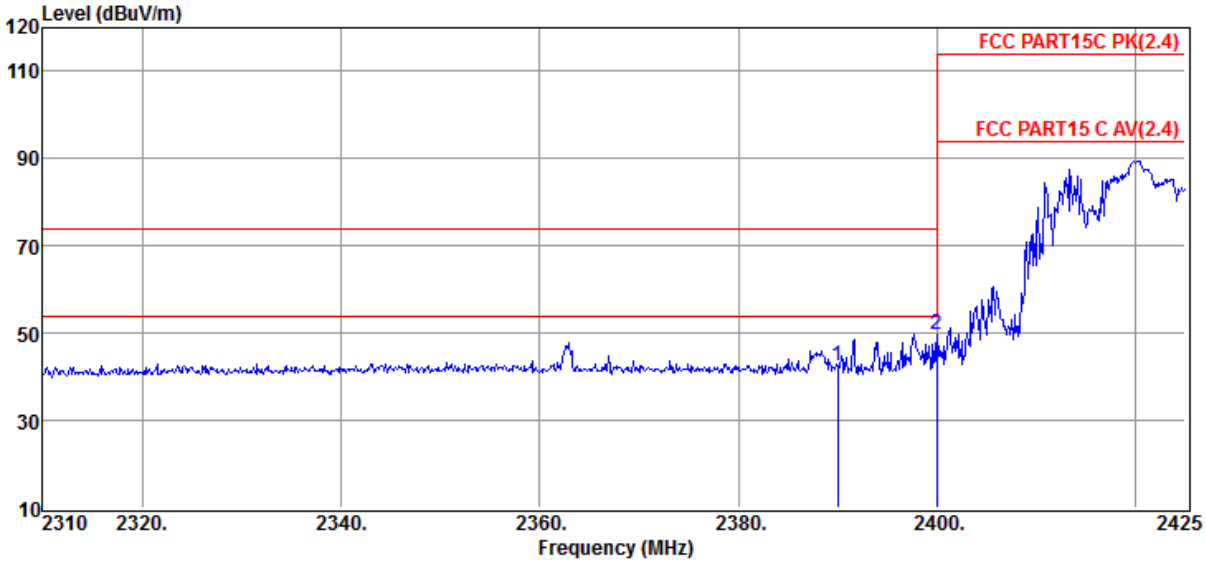

Item (Mark)	Freq. (MHz)	Read Level (dBµV)	Antenna Factor (dB/m)	PRM Factor dB	Cable Loss dB	Result Level (dBµV/m)	Limit Line (dBµV/m)	Over Limit (dB)	Detector	Polarization
1	2390.00	52.86	29.10	44.18	4.56	42.34	74.00	-31.66	Peak	HORIZONTAL
2	2400.00	60.17	29.12	44.18	4.56	49.67	74.00	-24.33	Peak	HORIZONTAL

Note: 1. Result Level = Read Level + Antenna Factor + Cable loss - PRM Factor.
2. If Peak Result complies with AV limit, AV Result is deemed to comply with AV limit.
3. Test setup: RBW: 1 MHz, VBW: 3 MHz, Sweep time: auto.

TR-4-E-009 Radiated Emission Test Result

Test Site	: DDT 3m Chamber 1#	D:\2018 RE1# Report Data\Q18120404-1E 91271\FCC ABOVE1G.EM6	
Test Date	: 2019-01-03	**Tested By**	: Talent
EUT	: RADIO CONTROL SWAN	**Model Number**	: 91271
Power Supply	: Battery	**Test Mode**	: Tx mode
Condition	: Temp:24.5'C,Humi:55%,Press:100.1kPa	**Antenna/Distance**	: 2018 HF 907/3m/HORIZONTAL
Memo	: 2465		

Data: 9

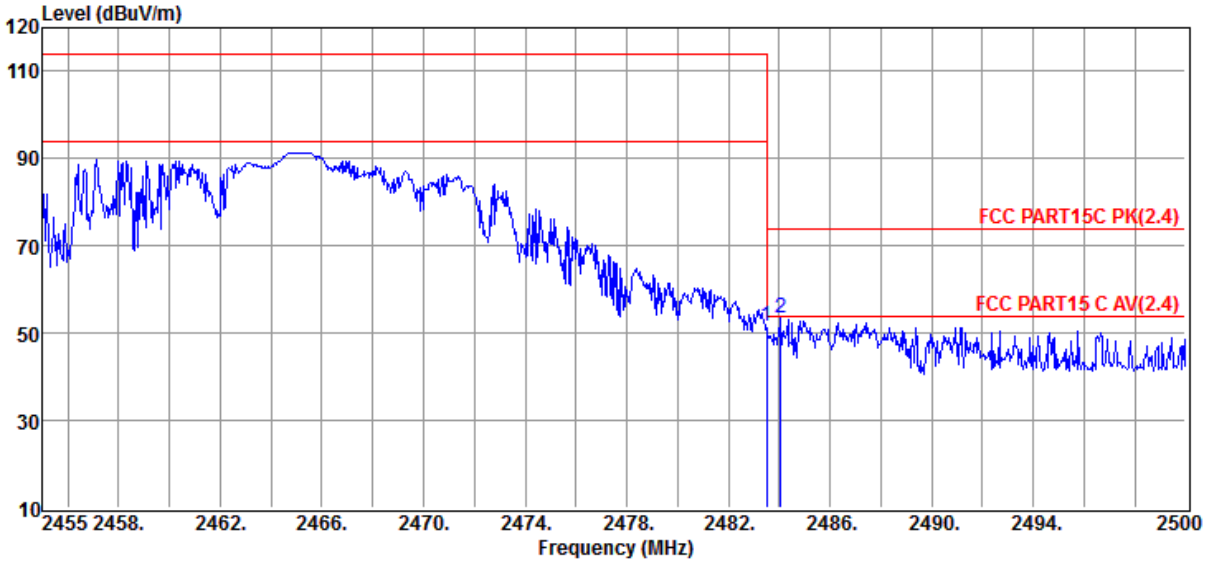

Item (Mark)	Freq. (MHz)	Read Level (dBµV)	Antenna Factor (dB/m)	PRM Factor dB	Cable Loss dB	Result Level (dBµV/m)	Limit Line (dBµV/m)	Over Limit (dB)	Detector	Polarization
1	2483.50	61.74	29.27	44.21	4.89	51.69	74.00	-22.31	Peak	HORIZONTAL
2	2484.07	63.63	29.27	44.21	4.90	53.59	74.00	-20.41	Peak	HORIZONTAL

Note: 1. Result Level = Read Level + Antenna Factor + Cable loss - PRM Factor.
2. If Peak Result complies with AV limit, AV Result is deemed to comply with AV limit.
3. Test setup: RBW: 1 MHz, VBW: 3 MHz, Sweep time: auto.

TR-4-E-009 Radiated Emission Test Result

Test Site	: DDT 3m Chamber 1#	D:\2018 RE1# Report Data\Q18120404-1E 91271\FCC ABOVE1G.EM6	
Test Date	: 2019-01-03	**Tested By**	: Talent
EUT	: RADIO CONTROL SWAN	**Model Number**	: 91271
Power Supply	: Battery	**Test Mode**	: Tx mode
Condition	: Temp:24.5'C,Humi:55%,Press:100.1kPa	**Antenna/Distance**	: 2018 HF 907/3m/VERTICAL
Memo	: 2465		

Data: 10

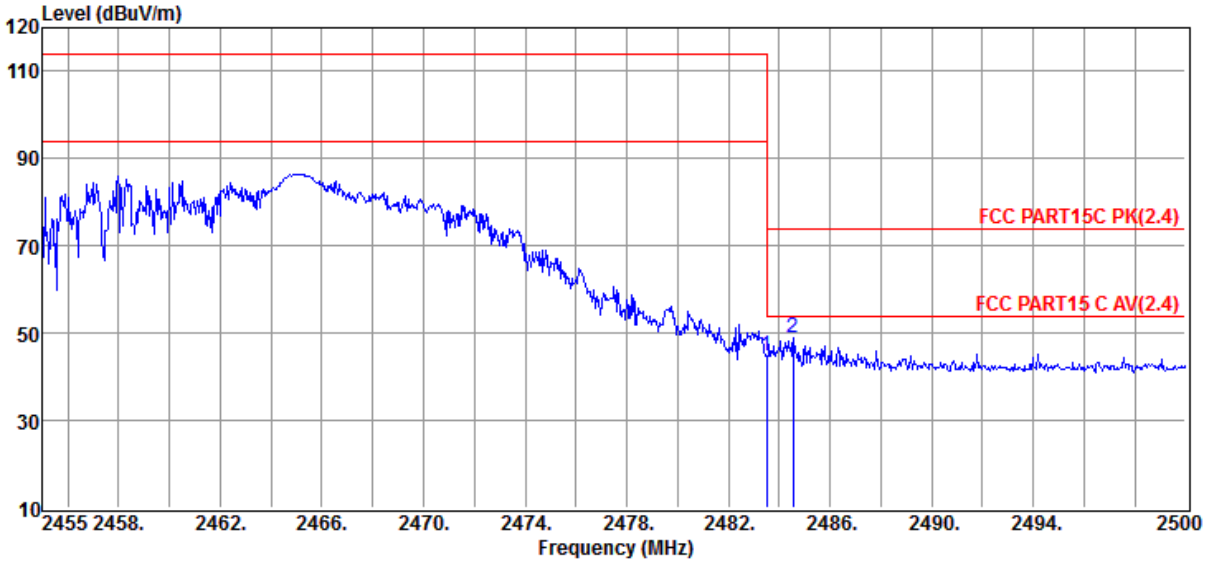

Item (Mark)	Freq. (MHz)	Read Level (dBµV)	Antenna Factor (dB/m)	PRM Factor dB	Cable Loss dB	Result Level (dBµV/m)	Limit Line (dBµV/m)	Over Limit (dB)	Detector	Polarization
1	2483.50	55.01	29.27	44.21	4.89	44.96	74.00	-29.04	Peak	VERTICAL
2	2484.57	58.86	29.27	44.21	4.90	48.82	74.00	-25.18	Peak	VERTICAL

Note: 1. Result Level = Read Level + Antenna Factor + Cable loss - PRM Factor.
2. If Peak Result complies with AV limit, AV Result is deemed to comply with AV limit.
3. Test setup: RBW: 1 MHz, VBW: 3 MHz, Sweep time: auto.

7. Power Line Conducted Emission

7.1. Block diagram of test setup

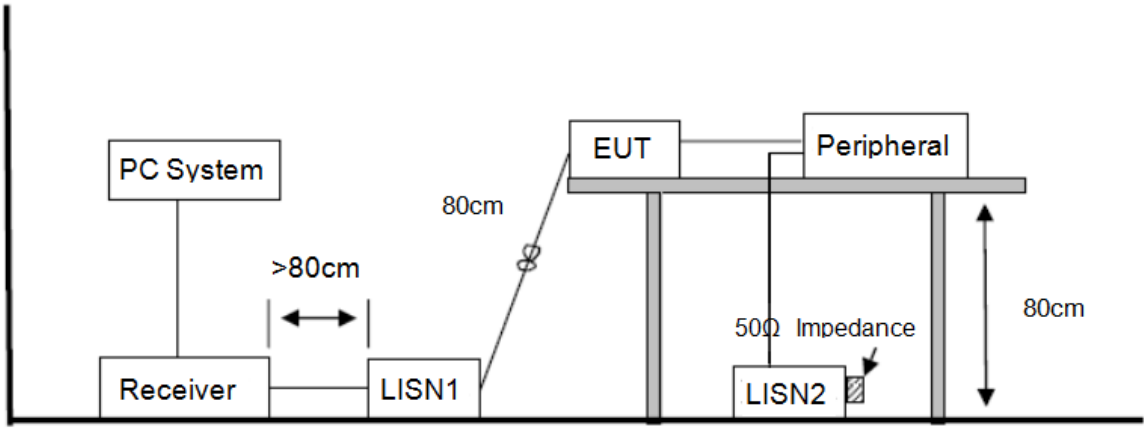

7.2. Power Line Conducted Emission Limits

Frequency	Quasi-Peak Level dB(μV)	Average Level dB(μV)
150kHz ~ 500kHz	66 ~ 56*	56 ~ 46*
500kHz ~ 5MHz	56	46
5MHz ~ 30MHz	60	50

Note 1: * Decreasing linearly with logarithm of frequency.

Note 2: The lower limit shall apply at the transition frequencies.

7.3. Test Procedure

The EUT and Support equipment, if needed, were put placed on a non-metallic table, 80cm above the ground plane.

Configuration EUT to simulate typical usage as described in clause 2.4 and test equipment as described in clause 10.2 of this report.

All I/O cables were positioned to simulate typical actual usage as per ANSI C63.10.

All support equipment power received from a second LISN.

Emissions were measured on each current carrying line of the EUT using an EMI Test Receiver connected to the LISN powering the EUT.

The Receiver scanned from 150 kHz to 30MHz for emissions in each of the test modes.

During the above scans, the emissions were maximized by cable manipulation.

The test mode(s) described in clause 2.4 were scanned during the preliminary test.

After the preliminary scan, we found the test mode producing the highest emission level.
The EUT configuration and worse cable configuration of the above highest emission levels were

recorded for reference of the final test.

EUT and support equipment were set up on the test bench as per the configuration with highest emission level in the preliminary test.

A scan was taken on both power lines, Neutral and Line, recording at least the six highest emissions.

Emission frequency and amplitude were recorded into a computer in which correction factors were used to calculate the emission level and compare reading to the applicable limit.

The test data of the worst-case condition(s) was recorded.

The bandwidth of test receiver is set at 9 kHz.

7.4. Test Result

PASS. (See below detailed test result)

Not Applicable

Conducted limits are not required for devices which only employ battery power for operation according to 15.207(C)

8. Antenna Requirements

8.1. Limit

For intentional device, according to FCC 47 CFR Section 15.203, an intentional radiator shall be designed to ensure that no antenna other than that furnished by the responsible party shall be used with the device.

8.2. Result

The antennas used for this product are integral PCB Antenna and that no antenna other than that furnished by the responsible party shall be used with the device, the maximum peak gain of the transmit antenna is 0 dBi.

END OF REPORT