FCC ID: 2AR8IGRIZZLYEARS46

Grizzly Ears 46

Bluetooth True Wireless Stereo Earbuds User Manual

Bluetooth headset should be used with the compatible devices which support Bluetooth wireless technology. This allows you to make two calls and enjoy the music streaming at any time freely.
Please read this user manual carefully before using the headset, and also read your device's user manual regarding the Bluetooth function, and pay attention to those important safety and maintenance information.
Please keep the headset away from children.

Specifications

Bluetooth Version:	V5.0
Bluetooth Profiles Supported:	HSP, HFP, A2DP, AVRCP
Audio Decoding Protocol:	SBC, AAC
Transmission Power:	Class 2
Operation Range:	Up to 10 meters
Frequency Range:	2.4GHz-2.48GHz
Battery of Headset:	45mAH Li-polymer Battery
Charging Voltage of Headset:	5V
Charging Time of Headset:	About 1.5 hour
Battery of Base:	460mAH Li-polymer Battery
Charging Voltage of Base:	5V
Charging Time of Base:	About 2 hours
Charging Headset Times from Charging Base :	2-3times
Charging Base Supply Power for Headset Music Play Time:	More than 6 hours
Music Playing Time:	Up to 3.5 hours
Talk Time:	Up to 3.5 hours
Standby Time:	Up to 85 hours
Dimensions of Charging Base(mm):	L80×W33×H31
Dimensions of Headset(mm) :	L27×W22.8×H26
Weight(one headset) :	About 4.6g
Total Weight :	About 41g

*The time mentioned above may vary due to user's operation mode and device settings.

Structure Sketch

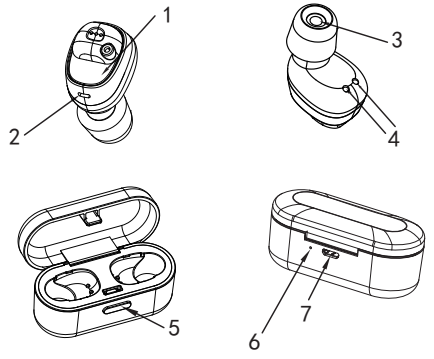

1) MFB(multifunction button)
2) Indicator light(MIC)
3) Speaker
4) The charging contact point
5) ON/OFF button
6) Charging base indicator
7) Micro USB charging port

Status No.	Status	Headset Performance
1	Pairing	The indicator light of headset(R) flashes red and blue alternately.
2	Charging	Red indicator light on, light off when charging completed.
3	Power ON	Blue indicator light flashes 3 times
4	Power Off	Red indicator light flashes 3 times.
5	Delete connection between 2 earbuds	Pink indicator light flash once

Charging

Charging - Red LED on
Finish charging - LED off

1. Put the earphone (L)(R) into the correct position close the charging case.
2. Use the USB charging cable for charging.

Note: Please charge the base with earphones inside before using.

Set Up

1 Press MFB for 2 seconds to turn on **2s**

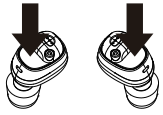

or:

Pick up the two earphones from the charging base to turn on

2

Wait until to see red & blue LED flashing, it is under pairing mode

Note: The Grizzly Ears 46 come with one "master" - "R" earphone, one "slave" - L earphone. When you turn on the earphones after they connected, "master" flash red and blue alternately, "slave" flash blue.

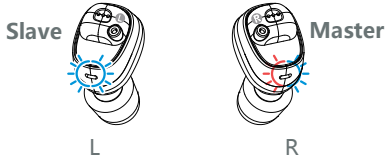

3 Turn on pairing function on your device, connect to "Grizzly Ears 46"

Note: Please don't pick "Grizzly Ears 46-L". Restart or reset the earphones if you cannot find "Grizzly Ears 46"

Multi-function Buttons

- Single Tap
- Double Tap
- Press and Hold

Amplify:

Start or end: Double tap L or R

Note: 1. Quick double taps to activated Amplify Shot Compression.
2. When you double tap to switch from Audio to Amplify it takes 4-6 seconds to activate Amplify Shot Compression.
3. Hearing protection activate after gun shoot.
4. Shot compression doesn't work in audio music mode must be in amplify mode for shot compression.

Music :

- Pause: Tap R
- Play: Tap either L or R while pause

Calling :

- Pick up call: Tap L or R
- End call: Tap L or R
- Rejecting call: Hold L or R

Note: Two-calling handling is not supported on all devices

Second call:

1. Press and hold the R to end the current call and answer the second call
2. Tap L or R to hold the current call and answer the second call
3. After picked up the second call, tap L or R to switch between calls
4. Hold and press L or R to end either call

Wearing

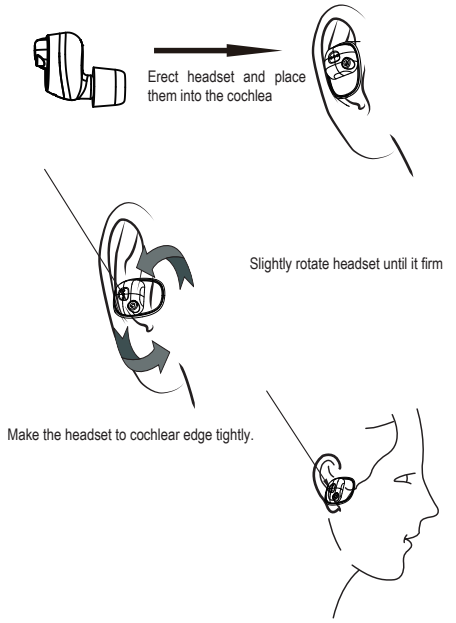

Remove the Earplugs

Pinch the earplug and rotate back & forth gently until earplug has been removed off the shaft.

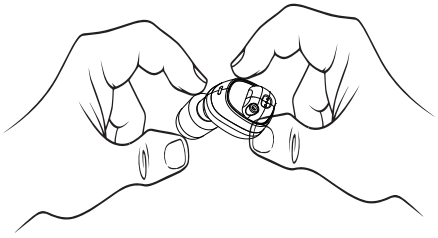

Earplugs

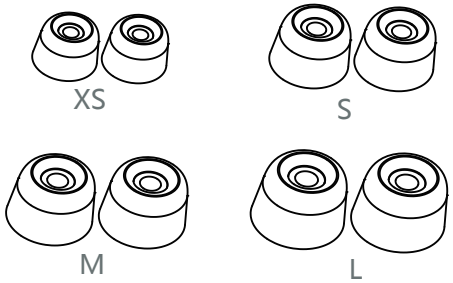

Note: Recommended to use a larger size earplug when shooting for better Hearing Protection.

Reconnection

The earphones will reconnect to the device when you're back into the working range after distance break.

Once the earhones are paired to the device, it will reconnect automatically on second time usage.

Note:
If it cannot reconnect to your device, please turn on the device pairing function, select the Grizzly Ears 46 to connect again.

If you still cannot do the reconnection, please delete the pairing record on your device, do the set up again.

Reset

Off-stage earphones, press both earphones and hold for 5-8 seconds until you see pink light or heard short 3 beeps. (operation to delete the internal pairing)
LED: blue – red – pink
Voice: power on – power off – beep beep beep

Turn on the earphones, wait for 5-10 seconds to let the earphones pair by themselves (operation to build up the internal pairing).
LED: blue – red/blue – blue – red/blue just on right earphone
Voice: power on – b – b … - left connected/right connected - pairing

Quick reference & trouble shooting

1. No need to power off earbuds just put back into charging case and close.
2. When taking out earbuds from charging case, earbuds will automatically connect to devise once it's already sync to your device. If charging case needs to be charged…earbuds might have powered off to save power. Just press down both earbuds 2-3 seconds to until you hear power on.
3. If one earbud is only working press and hold the earbud not working for 2 seconds until you hear power on and then both earbuds should sync to device
4. If you're in amplify press once to exit amplify mode before placing back into charging case
5. If you only want amplify with shot compression and not Bluetooth then turn off Bluetooth on your device and double press earbuds to activate amplify with shot compression. If you turn Bluetooth off on your device...it will give you longer battery charge up to 5 hours for amplify/shot compression.
6. You must be in amplify mode in order for shot compression to work.
7. If you're using lanyard & you want to just hang earbuds around neck...make sure you power off conserve battery. Push down for 6-8 seconds until you hear power off. To turn power on press both earbuds 2-3 seconds at same time until you hear power on.
8. If you hear beeping in one earbud...it means one earbuds is off and trying to sync to the other earbud. Press the earbud that's not beeping for 2-3 seconds until you hear power on.
9. You only have to push 1 earbud for 6-8 seconds if you're powering off earbuds.

Maintenance

- Do not use abrasive cleaning solvents to clean the headset.
- Do not allow the headset to touch with any sharp objects as this will cause scratching and damage
- Please keep headset away from high-temperature, humidity and dust.

www.grizzly-ears.com YouTube for set-up or trouble shooting

NOTE: This equipment has been tested and found to comply with the limits for a Class B digital device, pursuant to part 15 of the FCC Rules. These limits are designed to provide reasonable protection against harmful interference in a residential installation. This equipment generates uses and can radiate radio frequency energy and, if not installed and used in accordance with the instructions, may cause harmful interference to radio communications. However, there is no guarantee that interference will not occur in a particular installation. If this equipment does cause harmful interference to radio or television reception, which can be determined by turning the equipment off and on, the user is encouraged to try to correct the interference by one or more of the following measures:

- Reorient or relocate the receiving antenna.
- Increase the separation between the equipment and receiver.
-Connect the equipment into an outlet on a circuit different from that to which the receiver is connected.
-Consult the dealer or an experienced radio/TV technician for help

Changes or modifications not expressly approved by the party responsible for compliance could void the user's authority to operate the equipment.

This device complies with Part 15 of the FCC Rules. Operation is subject to the following two conditions:
(1) this device may not cause harmful interference, and
(2) this device must accept any interference received, including interference that may cause undesired operation.