DM1 radio

USER GUIDE

Mini walkie-talkie(two way radio)

OPERATIONAL WARRNINGS

Potentially Explosive Atmospheres (Explosive atmospheres refers to hazard classified locations that may contain hazardous gas, vapors, or dusts.)

Turn off your radio prior to entering any area with a potentially explosive atmosphere, unless it is a radio type especially qualified for use in such areas as"Intrinsically Safe" (for example, Factory Mutual, CSA,UL, CENELEC or ATEX Approved). Do not remove,install, or charge batteries in suchareas. Sparks in a potentially explosive atmosphere can cause an explosion or fire resulting in bodily injury or even death. The areas with potentially explosive atmospheres referred to above include fuelling areas such as below decks on boats, fuel or chemical transfer or storage facilities, areas where the air contains chemicals or particles, such as grain, dust or metal powders. Areas with potentially explosive atmospheres are often but not always posted.

Blasting Caps And Blasting Areas

To avoid possible interference with blasting operations, turn off your radio when you are near electrical blasting caps, in a blasting area,or in areas posted: "Turn off two-way radio". Obey all signs and instructions.

OPERATIONALCAUTIONS

Antennas

Do not use any portable radio that has a damaged antenna. If a damaged antenna comes into contact with your skin, a minor burn can result.

Batteries

All batteries can cause property damage and/or bodily injury such as burns if a conductive material such as jewellery, keys, or beaded chains touch exposed terminals. The

conductive material may complete an electrical circuit (short circuit) and become quite hot. Exercise care in handling any charged battery, particularly when placing it inside a pocket, purse, or other container with metal objects.

Pay attention to waterproofing

In rainy weather, keep the radio dry as far as possible. Do not put the radio under air conditioning to blow.Should wear waterproof sleeve film when overcast rainy day is used outdoors.

If the radio shell is mixed with soil or grease.Do not wash in water.Neutral detergent flannelette should be used to wipe.

For the radio that has been flooded.The battery should be unplugged immediately after the initial water intake, and do not attempt any voice operation.Then dry with a cloth, as soon as possible after the repair station to deal with.

1、The Structure Of The Product

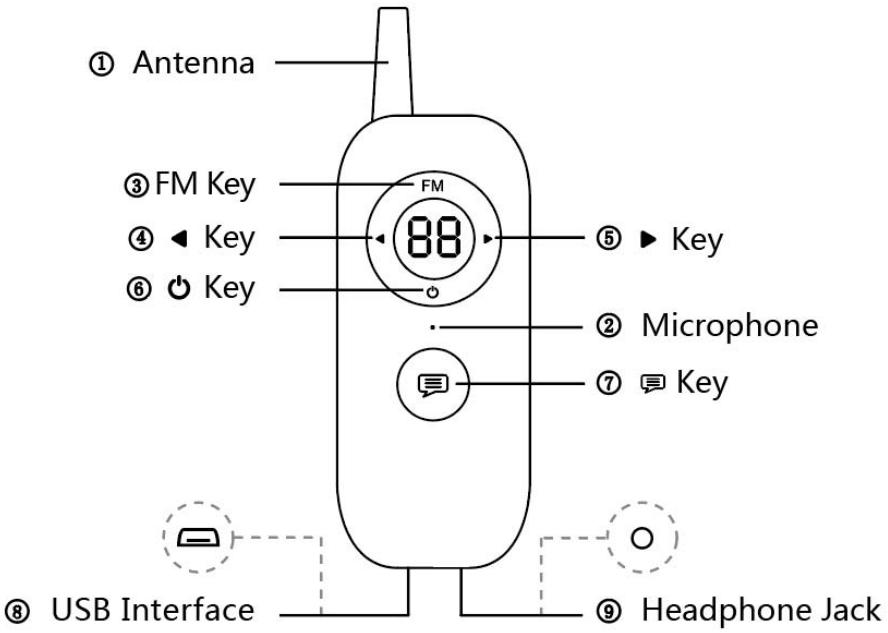

2、General Operation

NO.	Symbol	Part Name	General Operation
①	▯	Antenna	None
②	•	Microphone	None
③	FM	FM Key	Click the FM Key to turn FM ON/OFF. Press and hold the FM Key for about 2 seconds to make Keypadstay Locked/Unlocked.
④	◄	◄Key	**Channel Mode：** Click the ◄Key to decrease the channel number displayed. Press and hold the ◄Key to set the Monitor to ON. **Volume Adjust Mode:** Click the ◄Key to decrease the volume. **FM Mode:** Click the ◄Key to Search a radio station.
⑤	►	► Key	**Channel Mode：** Click the ►Key to increase the channel number displayed. Keep pressing the ►Key for about 2 seconds until the “L” display to setVolume Adjust ON.

			Volume Adjust Mode: Click the ▶Key to increase the volume. **FM Mode:** Click the ▶ Key to Search a radio station.
⑥	⏻	⏻Key	Press and hold the ⏻Key to turn the Radio ON/OFF. Click the ⏻Key to return to Channel Mode.
⑦	🗨	🗨Key	**Channel Mode：** Press and hold the 🗨Key and speak in a clear,normal voice about 5-8 cm away from microphone. **The Other Mode:** Click the 🗨 Key to return to Channel Mode.
⑧	⊟	USB Interface	**Charging the Radio:** Insert a USB cableinto the USB Interfaceand charge indicator flashes. **Programming the Radio:** Insert a micro USB cable which connects a computer into the USB Interface for programming the Radio.
⑨	○	Headphone Jack	Plug in earphones.

3、Function description

To make the best use of your new radio,read theuser guide completely before attempting to operate it.

3.1 Turning the Radio Onand Adjusting the Volume

To turn the radio ON,

Press and hold the ⏻Key for about 2 seconds.

To set Volume Adjust ON,

Keep pressing the ►Key for about 2 seconds until the “L” display. It has a total of 9 volume levels.

To increase the volume, click the ►Key.

To decrease the volume, click the ◄Key.

To turn the radio OFF,

Press and hold the ⏻Key for about 2 seconds.

3.2 Transmission or an Incoming Call

If you want to transmit, you can press and hold the Key and speak in a clear, normal voice about 5cm away from microphone. The red icon will appear on the displaymeanwhile.

Note: To avoid cutting off the first part of your transmission, pause slightly, after pressing the Key before you start talking.When you continue to transmit for 60 seconds, the radio emits TX time Out tone and the icon disappears. The radio will stop transmitting.

Incoming Call:

When you have finished speaking, release the Key.

You can now receive incoming calls. While receiving, the green icon will appear on the display.

3.3 Choosing a Channel

In Channel Mode:

To choose a Channel,

Click the ◄Key to decrease the channelnumber.

Click the ►Key to increase the channelnumber.

3.4 Monitor Mode

In Monitor Mode,your mini radio allows you to listen for weak signals on the current channel.

(1) To set the Monitor to ON, Press and hold the ◄Key for a while you want listen.

(2) Release the ◄Key to set the Monitor to OFF.

3.5 Automatic Power Save Mode

If there is no transmission or an incoming call within 10 seconds, your radio switches to the Power Save Mode, And the indicator light flashes. The radio is still able to receive information in this Mode.

3.6 Keypad Tone

Your radio emits a tone each time one of the keys (except for theKey) is pressed.

3.7 Key Lock Activation

To Lock the keypad:

Press and hold the FM Key for about 2 seconds until the icon appears.

To Unlock the keypad:

Press and hold the FM Key for about 2 seconds again until the icon disappears.

3.8 FM Mode

To turn FM ON:

Click the FM Key, and The icon appears.Click the ◀Key or the ▶ Key to Search a radio station.

To turn FM OFF:

Click the FM Key again, and The icon disappears.

3.9 Charging Mode

Insert a USB cable into the USB Interfaceand charging indicator flashes.

4、Feature

- Light and thin
- Fashionable appearance
- Micro USB charging
- Excellent performance

5、Specifications

Operating Frequency(Channels)	462.5500-462.7250MHz; 467.5625-467.7125MHz
Working Voltage	3V ~ 4.2V
Working Temperature	-30°~+50°
Operation Mode	Same frequency simplex or Differ-frequency
Antenna impedance	50Ω
Battery capacity	700mAh
Charging time	3 hours
Standby time	60 hours
Size	10.5*3.6*1.7cm（Including back clip and antenna）
Weight	40g
Frequency stability	≤±2.5ppm
Output Power	≤0.5W
modulation mode	F3E
Sensitivity	≤-122dBm
Adjacent channel selectivity	≥70dB
Intermodulation resistance	≥70dB
SNR	≥48dB

- Specifications are subject to change due to technical improvements without prior notice.

22 PMR in the U.S.A			
Channel No.	Channel Carrier Frequency (MHz)	Channel No.	Channel Carrier Frequency (MHz)
1	462.5625	12	467.6625
2	462.5875	13	467.6875
3	462.6125	14	467.7125
4	462.6375	15	462.5500
5	462.6625	16	462.5750
6	462.6875	17	462.6000
7	462.7125	18	462.6250
8	467.5625	19	462.6500
9	467.5875	20	462.6750
10	467.6125	21	462.7000
11	467.6375	22	462.7250

Common troubleshooting methods

Common Trouble	Troubleshooting
Cannot turn on DM1 radio	Low battery,so it needs to be charged before it can be used.
Cannot transmit	Confirm whether the Key is pressed or the battery power is insufficient at the time of transmitting, and restrict the transmission.
Cannot receive messages	Confirm whether the channel Settings of both parties are the same and whether the CTCSS or DCS code Settings are the same.Verify that the Key is fully released when receiving.Obstructions, indoor or in-car use may hinder communication. Please change your position.
You may hear something else on the radio	Too much external interference, so please increase the Squelch Level; The selected channel may be in use. Please select another channel.
The range of calls is limited	Buildings and trees will narrow the range of communication, check whether the view is open, please change your position; Walkie-talkie belt on the body, such as pocket or waist will reduce the range of communication, please change the location of the walkie-talkie
The sound is too loud/too low	Please pay attention to the volume adjustment

WARRANTY

Thank you very much for using our products.

Product Model Number：	Purchase Store：
Factory Serial Number：	
Purchase Date：	Store Phone：
Customer Name：	Customer Phone：
Customer Address：	Post Codes：

Commitment:

1. This card is considered as the Protection to fix warrantees, so please reserve then carefully.No reissuing if lost.
2. The validity period is dated from the day when the user purchased this product. And this card will not be valid until it is stamped by the company.
3. This card is not allowed to be altered. Please make sure that the serial number of the warranty card matches the purchase machine number, otherwise it will be invalid.
4. DM1 radio shall be free against defects in material and workmanship for 1 year from the date of purchase when used under the User Guide.
5. This warranty does not cover damages resulting from natural disaster, accident, alteration to product, misuse such as unauthorized disassembly,knock and collision or normal exterior wear and tear.
6. Users can choose the following ways to obtain maintenance services:

   A. Handle it at the original purchase office;

   B. Our company has appointed a local repair shop.

list of articles

article	Quantity
DM1 radio	1
USB cable	1
earphones	1
Lanyard	1
User Guide	1

Any Changes or modifications not expressly approved by the party responsible for compliance could void the user's authority to operate the equipment.
This device complies with part 15 of the FCC Rules. Operation is subject to the following two conditions:
(1) This device may not cause harmful interference,
and (2) this device must accept any interference received, including interference that may cause undesired operation.
Note: This equipment has been tested and found to comply with the limits for a Class B digital device, pursuant to part 15 of the FCC Rules. These limits are designed to provide reasonable protection against harmful interference in a residential installation. This equipment generates, uses and can radiate radio frequency energy and, if not installed and used in accordance with the instructions, may cause harmful interference to radio communications. However, there is no guarantee that interference will not occur in a particular installation. If this equipment does cause harmful interference to radio or television reception, which can be determined by turning the equipment off and on, the user is encouraged to try to correct the interference by one or more of the following measures:
—Reorient or relocate the receiving antenna.
—Increase the separation between the equipment and receiver.
—Connect the equipment into an outlet on a circuit different from that to which the receiver is connected.
—Consult the dealer or an experienced radio/TV technician for help.

SAR tests are conducted using standard operating positions accepted by the FCC with the walkie talkie transmitting at its highest certified power level in all tested frequency bands, although the SAR is determined at the highest certified power level, the actual SAR level of the walkie talkie while operating can be well below the maximum value. Before a new model is a available for sale to the public, it must be tested and certified to the FCC that it does not exceed the exposure limit established by the FCC, tests for each product are performed in positions and locations as required by the FCC.

For body worn operation, this device has been tested and meets the FCC RF exposure when used with an accessory designated for this product or when used with an accessory that Contains no metal.

To maintaion compliance with the FCC RF exposure guideline,hold the transimitter and antenna at least 2.5 centimeters from your face and speak in a normal voice,with the antenna pointed up and away from the face.

This equipment comply with FCC radiation exposure limits set forth for an uncontrolled environment.

The device is authorized to operate at a duty facor not to exceed 50%.