BEEBOX

Manual

Product Description:

The product is a Biometric Recognition Device system which contains Identification Terminal,Interface module(optional),and the gate control part.

The system is an intelligent channel management and control device with integrates QR code recognition, license reading and face recognition functions. It is based on TCP/IP network communication and uses synchronous data backup with the SaaS platform.

The system is an intelligent terminal device based on block-and-pass behavior which combines with face recognition technology to achieve personnel identification and passage control so as to enhance safety management.

Installation instructions:

1.Remove the speed gate door cover.

2.Remove the base bracket inside the speed gate door cover, tighten the identification terminal to the base with screws (M4*9.5), (a rubber gasket can be used to adjust the gap between the base and the cover), then put the base bracket back in place.

3.Fix the base to the base bracket with screws (M4*9.5), adjust all the screws after adjusting the identification terminal to the ideal angle, ensure identification end fixed to the base bracket.

4.Install the interface module into the reserved installation position in the speed gate door with screws (M3*6).

5.Connect the two cables (Cable A and Cable B) from the identification terminal to the corresponding interfaces on the interface board.
Note1: Please attention insert direction of the Cable A ,refer to the "*Figure 2*".

6.Reinstall the speed gate cover.

All operations must be finished by the professional installers.

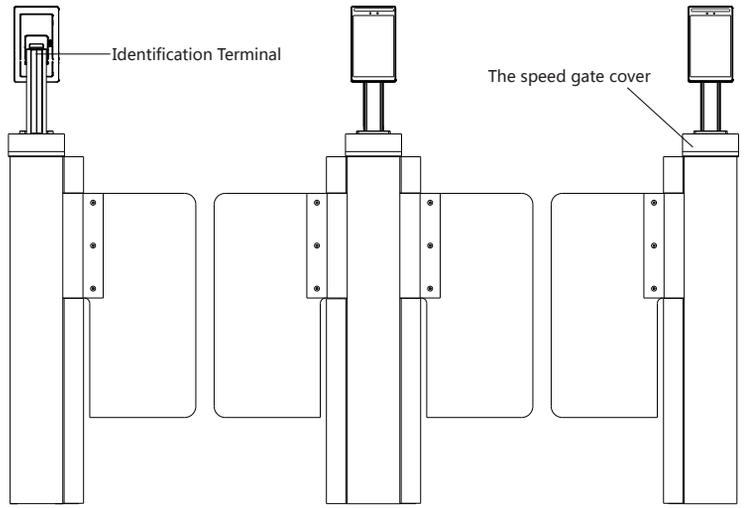

Figure 1

Installation diagram Figure 2

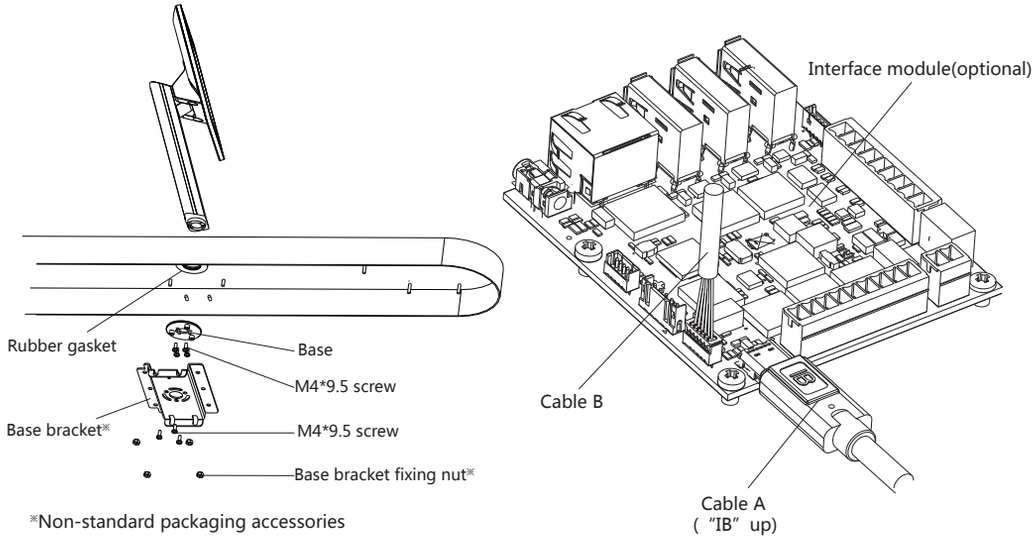

Dimensions (Unit：mm)

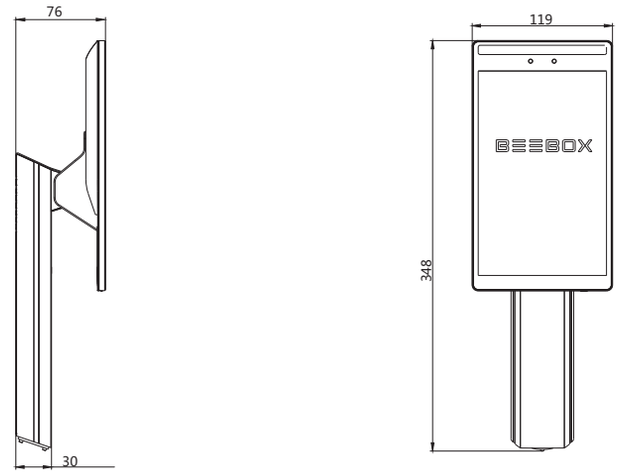

Figure 3

Rotatable Angle : 46°~77°

Figure 4

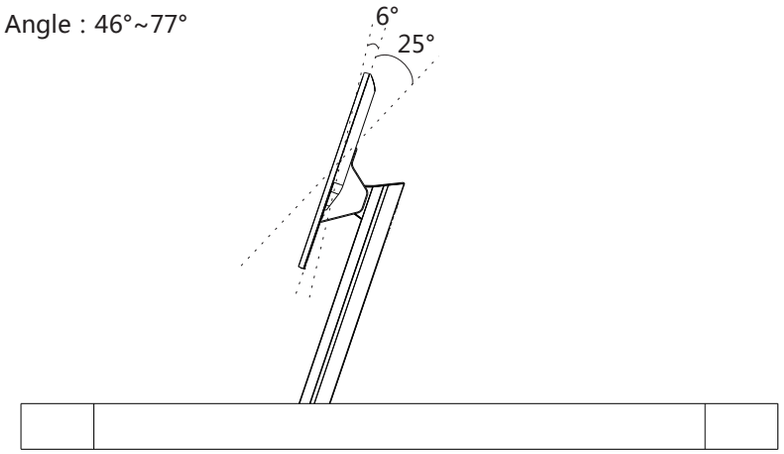

Port Description

Figure 5

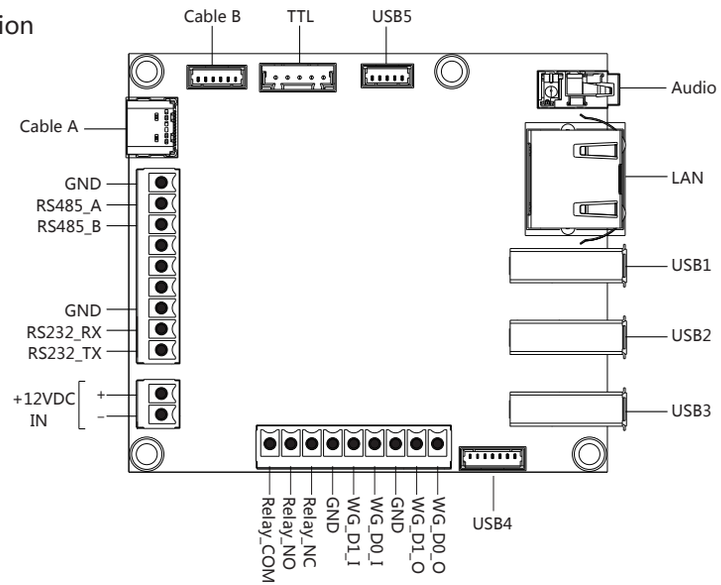

Specification

Product Number	BRD-AG-SD1	
Living Security	Support	
Qr code Scanning	Support(optional)	
Multi-touch	Support	
OS	Android 7.0	
Camera	Professional Wide-angle Dual Camera (Visible Light & Infrared)	
Display	8.0inch Touch LCD , 800*1280	
Operating temperature	-10℃ ~ 55℃	
Relative Humidity	5%-95%(Non-condensing)	
Power Cord Rating	DC 12V 3A	
Dimensions	119*76*348mm	
Communication Method	Wi-Fi	2.4 GHz/5 GHz (5150MHz-5250MHz; 5725MHz-5850MHz, IEEE 802.11a/g/b/n; IEEE 802.11ac
	Bluetooth	BT4.1+BLE
	Ethernet	Support
Physical Interface	Wiegand TX*1 , Wiegand RX*1 , Relay*1 , RS232*1 , RS485*1 , USB2.0*3 , RJ45*1 , Audio*1	
Power On	Support	

FCC Warning:
Any Changes or modifications not expressly approved by the party responsible for compliance could void the user's authority to operate the equipment.
This device complies with part 15 of the FCC Rules. Operation is subject to the following two conditions: (1) This device may not cause harmful interference, and (2) this device must accept any interference received, including interference that may cause undesired operation.
FCC Radiation Exposure Statement:
This equipment complies with FCC radiation exposure limits set forth for an uncontrolled environment. This equipment should be installed and operated with minimum distance 20cm between the radiator& your body.
This transmitter must not be co-located or operating in conjunction with any other antenna or transmitter.
Note: This equipment has been tested and found to comply with the limits for a Class B digital device, pursuant to part 15 of the FCC Rules. These limits are designed to provide reasonable protection against harmful interference in a residential installation. This equipment generates uses and can radiate radio frequency energy and, if not installed and used in accordance with the instructions, may cause harmful interference to radio communications. However, there is no guarantee that interference will not occur in a particular installation. If this equipment does cause harmful interference to radio or television reception, which can be determined by turning the equipment off and on, the user is encouraged to try to correct the interference by one or more of the following measures:
—Reorient or relocate the receiving antenna.
—Increase the separation between the equipment and receiver.
—Connect the equipment into an outlet on a circuit different from that to which the receiver is connected.
—Consult the dealer or an experienced radio/TV technician for help.

317-00487-01
© 2018 Beijing Beebox Technology Co.,Ltd. all rights reserved. Printed in China.
Add: 23A,JingYuan Arts Center, No.3 GuangQu Road,ChaoYang District,Beijing,100124