BEEBOX

Manual

Installation instructions

1.Please confirm that the expansion bolt is suitable for the current ground environment.

2.Attach the positioning sticker to the installation location.

3.The four positioning holes on the corresponding sticker are opened at the mounting position (recommended aperture 10mm, depth 70mm), used to fix expansion bolts and remove positioning stickers.

4.Unscrew the five screws on the bottom plate to remove the bottom plate and fix the four expansion bolts and the bottom plate to the ground.

5.Place the base and the weight in the position corresponding to the bottom plate, fix the four weight fixing screws (M4*18) together.

6.Fix the four counterweight cover fixing screws (M4*10) with the weights.

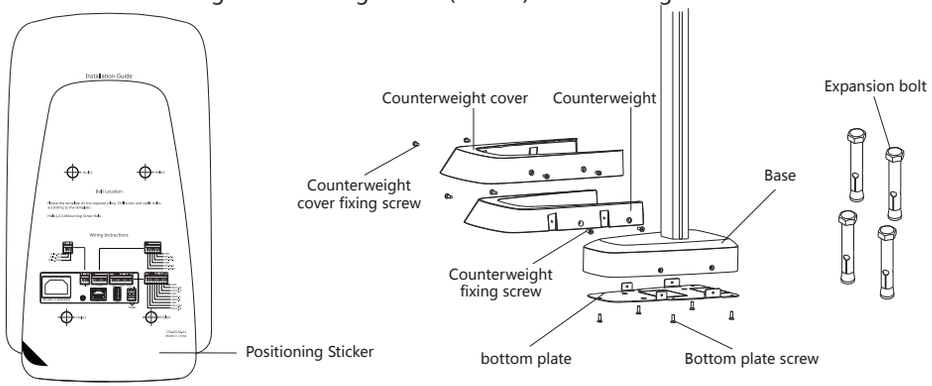

Dimensions (Unit : mm)

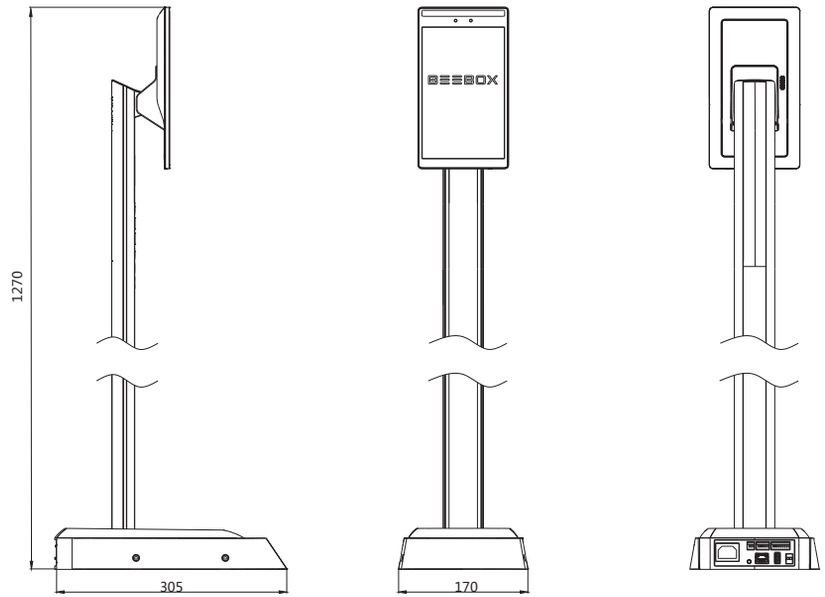

Rotatable Angle : 96°~65°

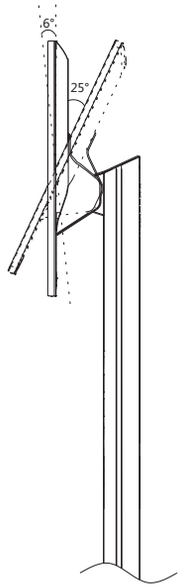

Port Description

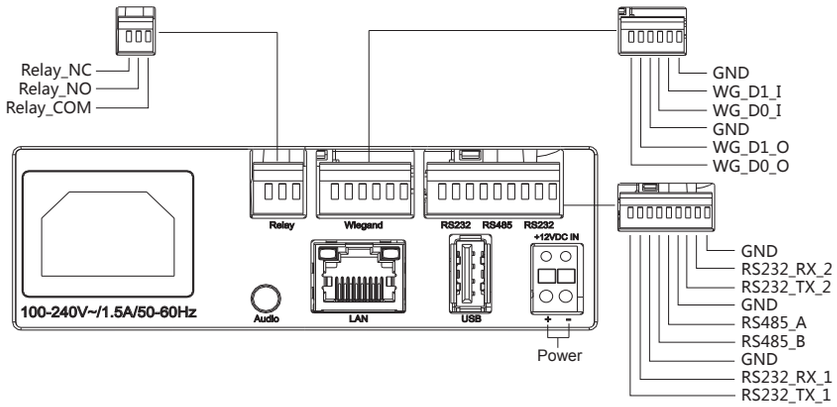

Position

Adapt to height range		
Distance from person to identification terminal W(cm)	Screen rotation angle	Recognizable height L(cm)
50	90°	126-157
	75°	140-170
	65°	150-192
70	90°	112-162
	75°	132-188
	65°	151-217
90	90°	102-172
	75°	128-202
	65°	151-251

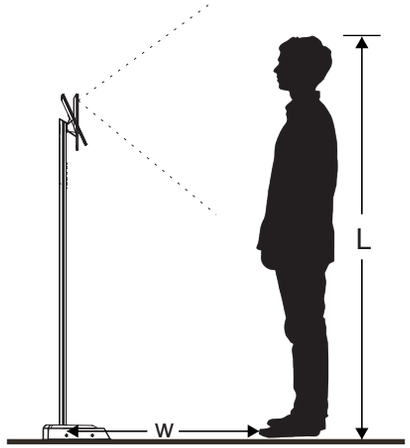

Specification

Product Number	BRD-ST-SD1	
Living Security	Support	
Recognition Distance	30-180cm	
Verification Method	1:1, 1:N, 1:1/1:N	
Face Comparison Time	1:N Comparison Time≤0.3s/p	
Capacity	20000	
OS	Android 7.0	
Camera	Professional Wide-angle Dual Camera (Visible Light & Infrared)	
Display	8.0inch Touch LCD，800*1280	
Operating temperature	-10℃ ~ 55℃	
Relative Humidity	5%-95%(Non-condensing)	
Dimensions	305*170*1270 mm	
Power Cord Rating	DC 12V 3A or AC 100-240V~/1.5A/50-60Hz	
Communication Method	Wi-Fi	2.4 GHz/5 GHz（5.15GHz-5.25GHz;5.725GHz-5.825GHz），IEEE 802.11a/g/b/n；IEEE 802.11ac
	Bluetooth	BT4.1+BLE
	Ethernet	Support
Physical Interface	RS232*2，USB2.0*1，RS485*1，Audio Jack*1，RJ45*1，Wiegand TX*1，Wiegand RX*1，Relay*1	
Power On	Support	

Any Changes or modifications not expressly approved by the party responsible for compliance could void the user's authority to operate the equipment.

This device complies with part 15 of the FCC Rules. Operation is subject to the following two conditions: (1) This device may not cause harmful interference, and (2) this device must accept any interference received, including interference that may cause undesired operation.

FCC Radiation Exposure Statement:

This equipment complies with FCC radiation exposure limits set forth for an uncontrolled environment. This equipment should be installed and operated with minimum distance 20cm between the radiator& your body.
This transmitter must not be co-located or operating in conjunction with any other antenna or transmitter.

Note: This equipment has been tested and found to comply with the limits for a Class B digital device, pursuant to part 15 of the FCC Rules. These limits are designed to provide reasonable protection against harmful interference in a residential installation. This equipment generates uses and can radiate radio frequency energy and, if not installed and used in accordance with the instructions, may cause harmful interference to radio communications. However, there is no guarantee that interference will not occur in a particular installation. If this equipment does cause harmful interference to radio or television reception, which can be determined by turning the equipment off and on, the user is encouraged to try to correct the interference by one or more of the following measures:

—Reorient or relocate the receiving antenna.

—Increase the separation between the equipment and receiver.

—Connect the equipment into an outlet on a circuit different from that to which the receiver is connected.

—Consult the dealer or an experienced radio/TV technician for help.

© 2018 Beijing Beebox Technology Co.,Ltd. all rights reserved. Printed in China.
317-00488-01