USER MANUAL

Smart Ultrasonic Cool Mist Humidifier

Model: Classic 200S

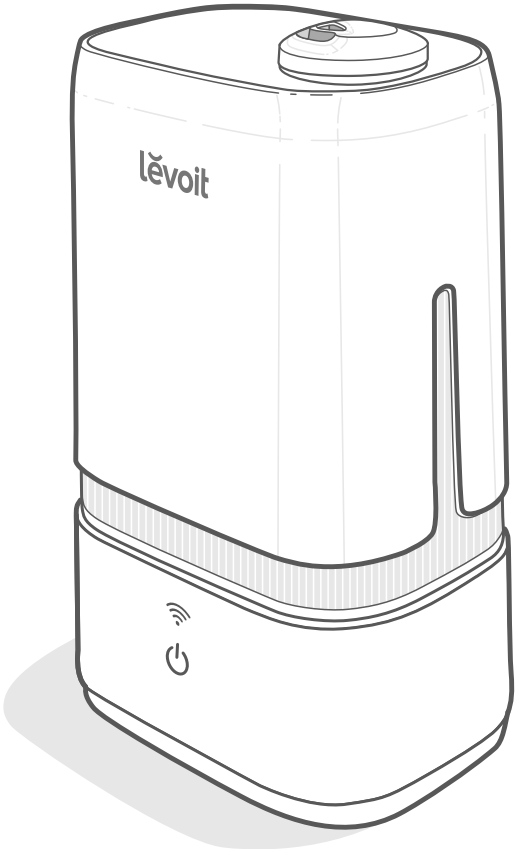

Questions or Concerns?

Please contact us Mon–Fri, 9:00 am–5:00 pm PST/PDT
at **support@levoit.com** or at **(888) 726-8520**.

Table of Contents

Package Contents 2
Specifications 2
Safety Information 3
- General Safety 3
- Plug & Cord 4

Getting to Know Your Smart Humidifier 5
Getting Started 6
- Filling & Refilling 6

VeSync App Setup 8
Using Your Smart Humidifier 9
- Auto Mode 10
- VeSync App Features 11
- Important Tips 12
- Using the Aroma Box 13
- Preventing Leaks 13

Care & Maintenance 14
- Cleaning 14
- Cleaning the Aroma Pad 17
- Reassembling 18
- Storing 18

Troubleshooting 19
VeSync App Troubleshooting 21
Warranty Information 23
Customer Support 24

Package Contents

1 x Smart Ultrasonic Humidifier
3 x Aroma Pads (1 Pre-Installed)
1 x Cleaning Brush
1 x User Manual
1 x Quick Start Guide

Specifications

Power Supply	AC 120V, 60Hz
Rated Power	24W
Water Tank Capacity	1.05 gal / 4 L
Max Run Time	Up to 40 hours on low mist setting ***Note:*** *The humidifier will be able to run for a longer or shorter time depending on the environmental temperature and humidity.*
Noise Level	≤ 30dB
Effective Range	285–376 ft^2 / 24–35 m^2
Dimensions	14 x 8 x 6 in / 35.4 x 20.2 x 15.2 cm
Weight	3.7 lb / 1.7 kg

Note: *To access additional smart humidifier functions, download the free VeSync app (see page 8).*

READ AND SAVE THESE INSTRUCTIONS

SAFETY INFORMATION

To reduce the risk of fire, electric shock, or other injury, follow all instructions and safety guidelines.

General Safety

- **Only** use the humidifier as described in this manual.
- Place the humidifier and cord so that it will not be knocked over. **Do not** place near large pieces of furniture or in high-traffic areas.
- When not in use, turn the humidifier off and disconnect from power by removing the plug from the outlet.
- **Do not** use the humidifier in wet environments.
- Keep the humidifier out of reach from children.
- **Do not** open the base or remove the water level sensor for self-servicing.
- **Always** unplug your humidifier from the power outlet before cleaning your humidifier or detaching the water tank from the humidifier base.
- **Always** make sure to place the humidifier on a flat, level surface before operation.
- **Only** fill the water tank with clean water. **Never** fill the water tank with any other liquids.
- **Do not** place the humidifier near sources of heat, such as stovetops, ovens, or radiators.
- **Do not** place the humidifier directly on floors, carpets, or rugs.
- **Do not** use other items as replacement parts for this product.
- **Do not** cover the nozzles while the humidifier is on. Doing so may damage the humidifier.
- Remove the water tank from the base before moving the humidifier.
- **Do not** immerse the humidifier base, power cord, or plug in water.
- If the humidifier is damaged or is not functioning properly, stop using it and contact **Customer Support** immediately (see page 24).
- Not for commercial use. Household use **only**.

Caution: Risk of Leaks and Electric Shock

- **Do not** add essential oils, supplemental water treatment liquids, or water filters into the water tank or base chamber. This will damage the humidifier and cause leaks. **Only** add essential oils to the aroma pad.

Plug & Cord

- Ensure that the plug fits properly into a polarized socket.
- **Do not** handle the power cord or plug with wet hands. Keep the plug and power cord away from liquids.
- Your humidifier has a polarized plug (one prong is wider than the other), which fits into a polarized outlet only one way. This is a safety feature to reduce the risk of electric shock. If the plug does not fit, reverse the plug. If it still does not fit, **do not** use the plug in that outlet. **Do not** bypass this safety feature.

GETTING TO KNOW YOUR SMART HUMIDIFIER

A. Nozzles
B. Nozzle Cover
C. Water Tank Handle
D. Mist Outlet
E. Water Tank
F. Cleaning Brush
G. Cleaning Brush Storage
H. Base
I. WiFi® Button
J. Control Button
K. Insulation Ring
L. Transducer
M. Float Housing
N. Float
O. Mist Tube
P. Water Tank Windows
Q. Air Outlet
R. Base Chamber
S. Power Cord
T. Water Tank Cap
U. Silicone Sealing Ring
V. Water Valve
W. Noise Silencer
X. Humidity Sensor
Y. Aroma Pad
Z. Aroma Box
AA. Air Inlet

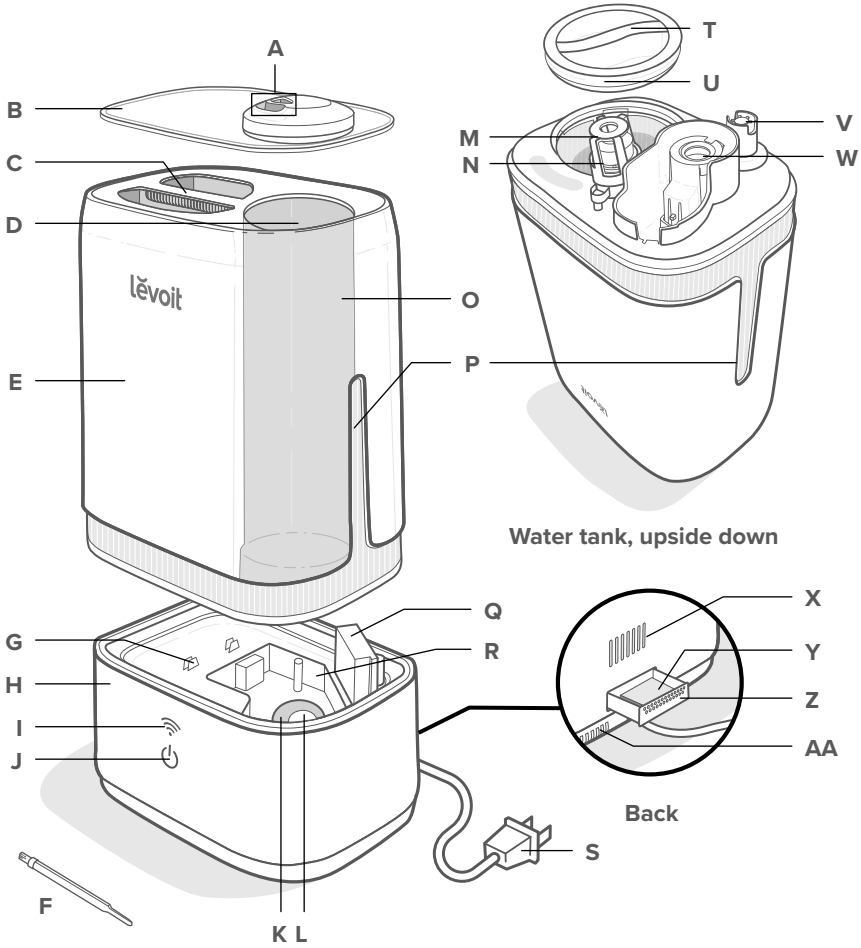

GETTING STARTED

1. Remove all packaging.
2. Choose a hard, flat location for the humidifier at least 12 in / 30 cm away from any walls. The surface must be water-resistant. *[Figure 1.1]*

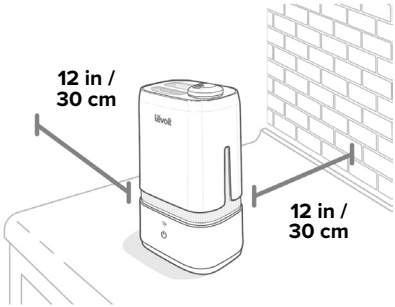

Figure 1.1

3. Mist should be directed away from walls, furniture, bedding, and appliances. *[Figure 1.2]*

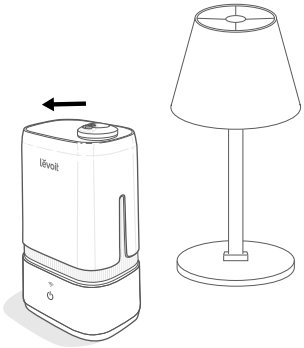

Figure 1.2

Filling & Refilling

1. Remove the nozzle cover from the water tank. Use the handle to lift the water tank from the base. *[Figure 1.3]*

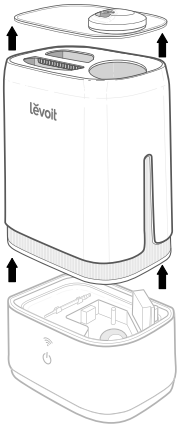

Figure 1.3

2. Flip over the water tank and remove the water tank cap by twisting it counterclockwise. *[Figure 1.4]*

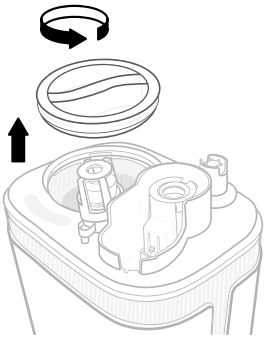

Figure 1.4

Filling & Refilling (cont.)

3. Fill the tank with room-temperature water. *[Figure 1.5]* **Do not** fill with hot water.

Note: *We recommend using purified or distilled water to fill the tank.*

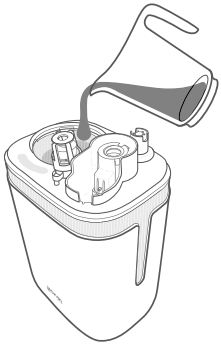

Figure 1.5

4. Replace the water tank cap and align the arrow with the lock. *[Figure 1.9]*

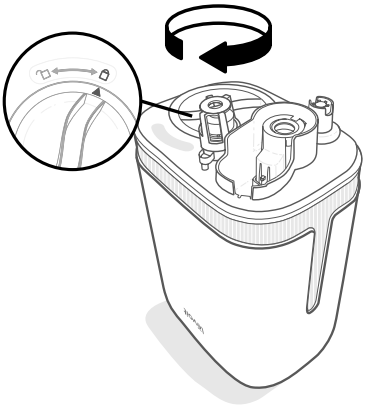

Figure 1.9

CAUTION

- **Do not** add water directly into the base chamber. *[Figure 1.6]*

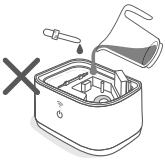

Figure 1.6

- **Do not** add water through the mist tube.
- **Do not** add essential oils into the humidifier. *[Figure 1.7]* **Only** add essential oils to the aroma pad. *[Figure 1.8]*

Figure 1.7

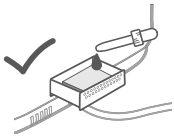

Figure 1.8

- **Do not** use water treatment liquids, or third-party water filters in this humidifier.

Filling & Refilling (cont.)

5. Place the tank back on the base and replace the nozzle cover onto the water tank. *[Figure 1.10]*

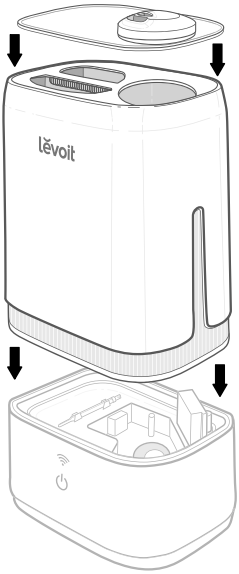

Figure 1.10

VESYNC APP SETUP

Note: *Due to ongoing updates and improvements, the VeSync app may be slightly different than shown in the manual. In case of any differences, follow the in-app instructions.*

1. To download the VeSync app, scan the QR code or search "VeSync" in the Apple App Store® or Google Play Store. [*Figure 2.1*]

Note: *For Android™ users, choose "Allow" to use VeSync.*

2. Open the VeSync app. If you already have an account, tap **Log In**. To create a new account, tap **Sign Up**.

Note: *You must create your own VeSync account to use third-party services and products. These will not work with a guest account. With a VeSync account, you can also allow your family and friends to control your smart humidifier.*

3. Follow the in-app instructions to set up your smart humidifier.

Note: *You can use the VeSync app to connect your smart humidifier to Amazon Alexa or Google Assistant™. Follow the in-app instructions to connect VeSync to your voice assistant.*

Available on the App Store

GET IT ON Google Play

Figure 2.1

USING YOUR SMART HUMIDIFIER

Note: *Using the VeSync app allows you to control your smart humidifier remotely and access additional functions and features (see page 11).*

1. Plug in the humidifier.
2. Tap ⏻ to turn your humidifier on. Tap repeatedly to cycle through mist settings: Auto Mode, Low, Medium, High, and Off. *[Figure 3.1]*

Note: *For more information on Auto Mode, see page 10.*

3. Rotate the nozzles to adjust the direction of the mist. *[Figure 3.2]*
4. When your room has reached your preferred humidity level, turn the humidifier to a lower setting or turn it off. A healthy humidity level is between 40% and 50%. *[Figure 3.3]*
5. Press and hold ⏻ for 2 seconds to turn your humidifier off.

Note:

- *If there is no water in the tank or the tank is removed, the humidifier will stop misting, ⏻ will turn red, and the fan will turn off after 5 seconds.*
    - *When the tank is empty or removed, you can tap ⏻ or ᯤ to turn the humidifier off.*
    - *Refill the tank and properly place it on the base to use your humidifier.*
    - *To restart the humidifier, tap ⏻ as normal. You can also turn the humidifier back on in the app, which will remember your previous mist level setting.*
- *To reset the humidifier, press and hold ᯤ for 15 seconds. This will restore the humidifier's default settings and disconnect it from the VeSync app.*

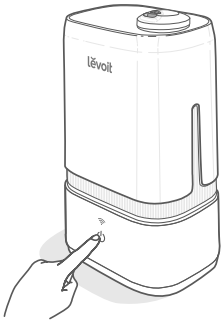

Figure 3.1

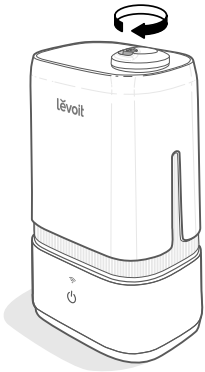

Figure 3.2

Figure 3.3

Button Color

Button	Button Color	Function
	Green	Low mist setting is selected
	Cyan	Medium mist setting is selected
	Blue	High mist setting is selected
	White	Auto Mode is selected
	Red	No water in tank or tank not on base
	Off	Humidifier is off
		Button lights have been turned off
	White (Flashing)	Humidifier is in WiFi pairing mode
	White	Humidifier has been paired with WiFi
	Off	Humidifier is off
		Button lights have been turned off
		Humidifier is not connected to WiFi

Note:

- *Tap to turn off the indicator lights.*
- *Press and hold to configure your smart humidifier. See the VeSync in-app instructions for more information.*

Auto Mode

Auto Mode uses the humidifier's sensor to automatically adjust the mist level (or turn it off) to maintain a comfortable and healthy level of humidity.

- Auto Mode will automatically adjust the mist level to maintain 45% relative humidity. You can change the target humidity level in the VeSync app.
- By default, Auto Mode will keep running on Low mist level when the target humidity level is reached.
- In the VeSync app, you can change the Auto Mode settings to include Automatic Stop. This will cause the humidifier to stop misting when the target humidity level is reached. If the humidity drops below the target humidity level, then the humidifier will begin misting again.

VeSync App Functions

The VeSync app allows you to access additional smart functions, including those listed below.

Remote Control

- Cycle through mist levels and turn on Auto Mode from your phone.
- Turn button lights on/off from your phone.
- Customize Auto Mode settings like target humidity and auto-off.

Monitor Humidity Levels

- Check current humidity levels in the humidifier's environment.

Set Timers and Schedules

- Program individual timers or create a schedule for your smart humidifier.

Third-Party Voice Control

- Compatible with Amazon Alexa and Google Assistant for voice commands.

Note: *The VeSync app is continually updated and app features will expand.*

Important Tips

Your humidifier must have the correct level of water in the base chamber to work properly. If there is too much water in the base chamber, the humidifier cannot create mist.

- **Never** pour water directly into the base chamber. **Only** add water to the water tank. *[Figure 3.4]* The humidifier will automatically release the correct amount of water into the base chamber.
- Avoid moving or shaking the humidifier. *[Figure 3.5]* This may cause the water tank to release too much water into the base chamber.
- Before moving the humidifier, turn it off, unplug it, and remove the water tank.
- If your humidifier doesn't produce mist correctly, check the max water line to see if there is too much water in the base chamber. Pour out extra water if water is over the max line. *[Figure 3.6]*

Note: *The max water line is* ***only*** *for this purpose.* ***Do not pour water into the base chamber.***

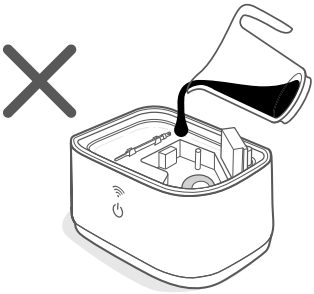

Figure 3.4

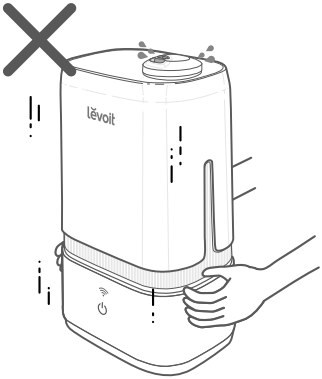

Figure 3.5

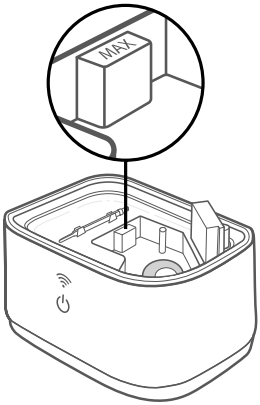

Figure 3.6

Using the Aroma Box

Your humidifier can be used for aromatherapy.

1. Push the aroma box at the back of the base and pull it out. *[Figure 3.7]*

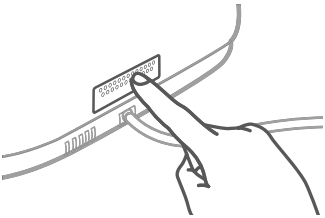

Figure 3.7

2. Put 2–3 drops of essential oil on the aroma pad. *[Figure 3.8]*

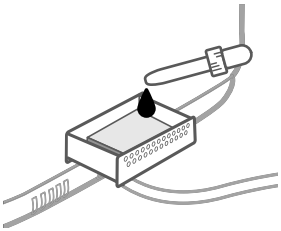

Figure 3.8

3. Place the aroma box into the humidifier.
4. Turn on the humidifier. The humidifier will automatically diffuse aroma when used.

Note:

- ***Do not*** *add essential oils, water treatment liquids, or third-party water filters into the water tank or base chamber.* **Only** *add essential oils to the aroma pad.*
- *The aroma pads can be cleaned and reused after diffusing essential oils (see* ***Cleaning the Aroma Pad****, page 17).*
- *The aroma is intended to be light. This humidifier is not an aroma diffuser.*

Preventing Leaks

The water tank may leak if not placed properly.

- Make sure the silicone sealing ring around the water tank cap is secured at all times.
- Twist and secure the cap tightly onto the water tank. Make sure the arrow is aligned with the lock. *[Figure 3.9]*

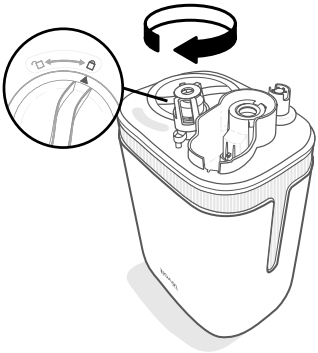

Figure 3.9

Note: *A small gap between the cap and the tank is normal.*

- *Wipe any excess water off the top and bottom of the base.*
- ***Do not*** *shake the humidifier.*
- *Make sure to place the humidifier on a flat, level surface.*

CARE & MAINTENANCE

Note:

- *All maintenance should be done on a water-resistant surface, such as a kitchen counter.*
- *Change the water daily to avoid bacteria growth.*
- *Use a tissue or cloth to clean the nozzles regularly.*
- *If not using the humidifier for 1 week or longer,* ***do not*** *leave water inside. Clean and dry the humidifier instead.*

Cleaning

You should clean your humidifier every week, and when you're ready to store it.

Note:

- ***Never*** *immerse the base in water or liquid.* ***Do not*** *place any part of the humidifier in a dishwasher.*
- ***Do not*** *use detergents to clean the humidifier.*

1. Unplug the humidifier.
2. Remove and rinse the nozzle cover. [*Figure 4.1*]

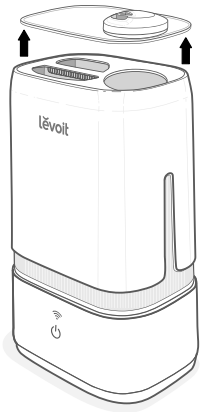

Figure 4.1

3. Remove the water tank from the base. Pour out any water from the tank and base chamber. [*Figure 4.2*]

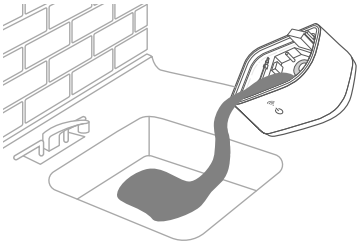

Figure 4.2

4. Rinse the tank and base chamber with room temperature water. [*Figure 4.3*]

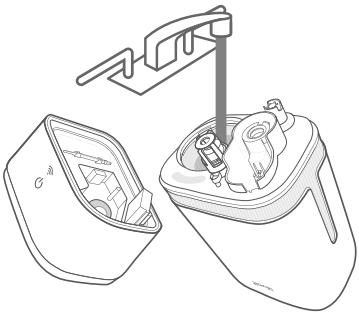

Figure 4.3

Cleaning (cont.)

5. To descale the humidifier:

a. Fill the tank with 3 US cups / 710 mL of distilled white vinegar. *[Figure 4.4]*

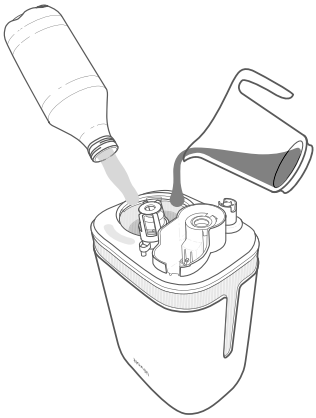

Figure 4.4

b. Replace the tank cap and swish the vinegar around the tank. *[Figure 4.5]*

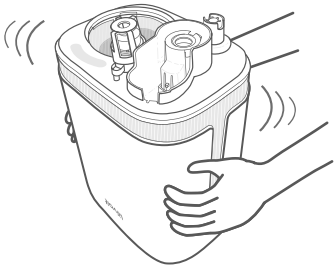

Figure 4.5

c. Place the tank on the base and soak for 15–20 minutes. Vinegar will drain into the base chamber and loosen scale (mineral buildup) in the tank and in the base chamber (including the transducer and float). *[Figure 4.6]*

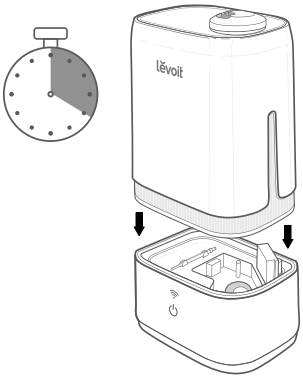

Figure 4.6

d. Remove the tank and pour out any vinegar. *[Figure 4.7]*

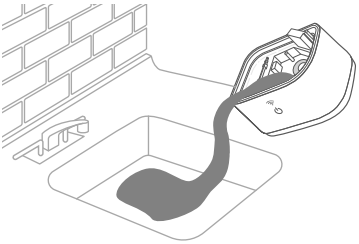

Figure 4.7

Cleaning (cont.)

e. Flip the tank over and remove the tank cap and noise silencer. To remove the noise silencer, press the release tab and gently pull away from the humidifier. *[Figure 4.8]*

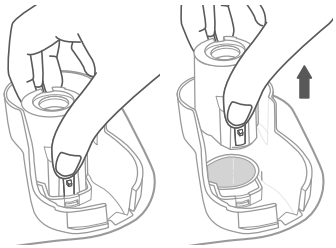

Figure 4.8

f. Place the tank cap and noise silencer in a small container and fill with enough vinegar to cover them. Soak for 15–20 minutes. *[Figure 4.9]*

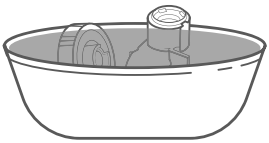

Figure 4.9

g. Use a soft cloth and the included cleaning brush to remove scale. *[Figure 4.10]*

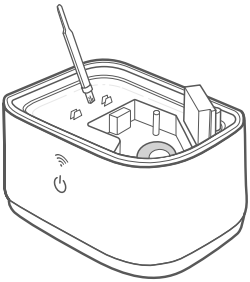

Figure 4.10

h. Rinse all parts until any vinegar smell is completely gone. *[Figure 4.11]*

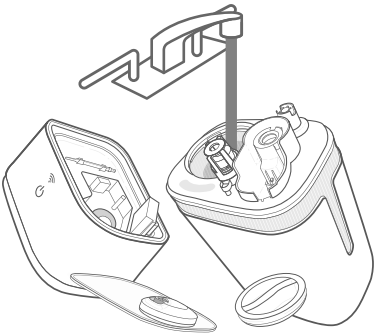

Figure 4.11

6. Dry all parts with a cloth. Make sure all parts are completely dry before reassembling or storing.

Note: *Brush can be stored in the brush storage slots in the base.*

Cleaning the Aroma Pad

1. Press the aroma box to release it from the base, and pull it out. *[Figure 4.12]*

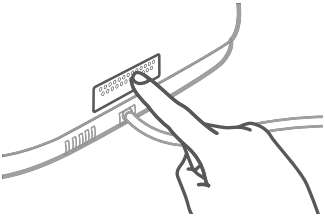

Figure 4.12

2. Remove the aroma pad and rinse under warm, running water. *[Figure 4.13]*

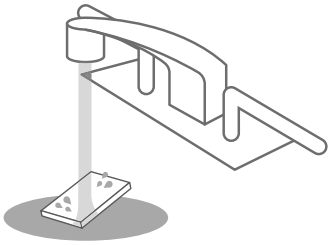

Figure 4.13

3. Dry with a clean cloth and place it back into the aroma box. *[Figure 4.14]*

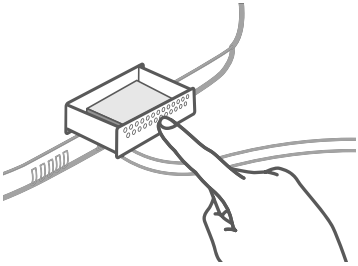

Figure 4.14

***Note: Do not** pour liquid cleaners or detergents into the aroma pad or box.*

Reassembling

1. Flip the water tank over and replace the noise silencer on the tank. *[Figure 4.15]*

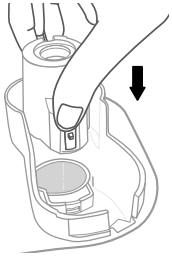

Figure 4.15

2. Refill the tank, if necessary. Replace the water tank cap by firmly twisting it back in place, aligning the arrow with the lock. *[Figure 4.16]*

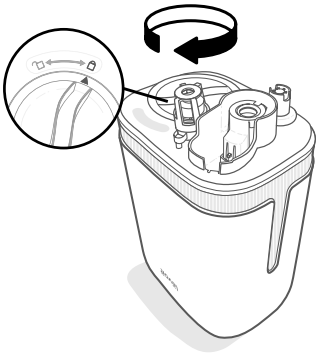

Figure 4.16

3. Store the brush in the brush storage slots in the base. *[Figure 4.17]*

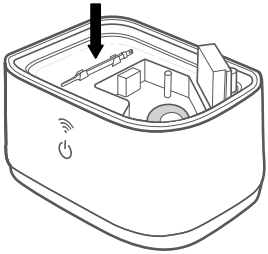

Figure 4.17

4. Place the tank properly on the base and replace the nozzle cover onto the water tank. *[Figure 4.18]*

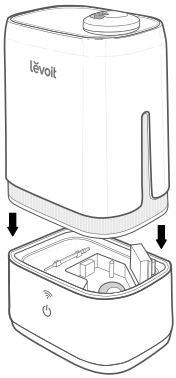

Figure 4.18

Storing

Follow the cleaning instructions (see page 14) and allow all parts to dry completely before storing. Store in a cool, dry location.

TROUBLESHOOTING

Problem	Possible Solution
Humidifier doesn't turn on.	Plug in the humidifier and turn it on.
	Add purified or distilled water to the water tank.
Little or no mist comes out.	Turn the mist level to a higher setting.
	Fill the water tank.
	There may be too much water in the base chamber. Empty the base chamber. Refill the water tank (not the base chamber) and place the water tank properly onto the base.
	Make sure the air inlet on the bottom of the base is not blocked. The humidifier should not be set on carpet or other surfaces that may block the air inlet.
	Make sure the nozzles are not blocked or clogged.
	Make sure the humidifier is on a level surface.
	The water temperature may be too low. Turn the mist level to the highest setting and let the humidifier run for a while, then adjust to the desired setting.
	If the water tank or base was washed with detergent, rinse thoroughly with clean water to remove any detergent.
Humidifier uses water too quickly.	The humidifier uses up water based on the environmental temperature and humidity. If your environment is cold and/or dry, the humidifier will run out of water faster.
Humidifier produces an unusual smell.	If the humidifier is new, remove and rinse the water tank cap, and place the water tank in a cool, dry place for 12 hours.
	If essential oils were placed on the aroma pad, rinse the pad under clean water and allow it to dry.
	Clean the water tank and base chamber (see **Care & Maintenance**, page 14).

Problem	Possible Solution
Humidifier makes a loud or unusual noise.	Make sure the water tank is properly in place (see **Getting Started**, page 6).
	Set mist level to a lower setting.
	Empty the base chamber. Refill the water tank (not the base chamber) and place the water tank properly onto the base.
	The humidifier may be malfunctioning. Stop using the humidifier and contact **Customer Support** (see page 24).
White dust appears around the humidifier.	We recommend using purified or distilled water to fill the humidifier. Avoid using water with high mineral content.
	Clean the humidifier (see **Care & Maintenance**, page 14).
Water leaks from the humidifier.	Make sure the silicone sealing ring around the water tank cap is secure and tighten the water tank cap.
	Check the water tank for leaks. If there are leaks, contact **Customer Support** (see page 24).
Condensation forms around humidifier or windows.	Humidity may be too high. Turn down the mist level, turn off the humidifier, or open a door or window to the room.
Mold grows inside the humidifier.	Clean the water tank and inner chamber regularly (see **Care & Maintenance**, page 14).
⏻ is red.	Fill the water tank.
	Place the water tank properly on the base.
Essential oil has little or no smell.	Add more essential oil. For best results, use pure essential oil.

If your problem is not listed, please contact **Customer Support** (see page 24).

VESYNC APP TROUBLESHOOTING

Why isn't my humidifier connecting to the VeSync app?

- Make sure your phone has Bluetooth® turned on and is not currently connected to another Bluetooth device.
- During the setup process, you must be on a secure 2.4 GHz WiFi® network. Confirm that the network is working correctly.
- Make sure the WiFi password you entered is correct.
- Make sure your humidifier and phone are within 30 ft / 10 m of each other.
- Reset the humidifier by pressing and holding for 15 seconds. Then try connecting again.

My humidifier is offline.

- Make sure the humidifier is plugged in. The humidifier may appear to be offline if it is unplugged, or if the outlet does not have power.
- Refresh the VeSync menu by swiping down on the screen.
- Make sure your router is connected to the internet and your phone's network connection is working.
- Reset the humidifier using one of these options:
  - **a.** Delete the humidifier from the VeSync app. Swipe left (iOS®) or press and hold (Android), then tap **Delete**. Then reconfigure your humidifier with the VeSync app.
  - **b.** Press and hold for 15 seconds. Then reconfigure your humidifier with the VeSync app.

Note: *Power outages, internet outages, or changing WiFi routers may cause your humidifier to go offline.*

The VeSync app is displaying an incorrect humidity percentage while the humidifier is turned on.

- The room may be larger than the humidifier's effective range. Move to a room smaller than 376 ft^2 / 35 m^2.
- Moisture may have built up inside the humidity sensor. Turn off the humidifier and allow the sensor to air dry. Make sure the nozzles are facing away from the sensor so that mist does not settle on the sensor, which is located on the back of the base (see page 5).

FCC STATEMENT

This device complies with Part 15 of the FCC Rules. Operation is subject to the following two conditions:

1. This device may not cause harmful interference, and
2. This device must accept any interference received, including interference that may cause undesired operation.

Any changes or modifications not expressly approved by the party responsible for compliance could void the user's authority to operate this equipment.

This equipment has been tested and found to comply with the limits for a Class B digital device, pursuant to Part 15 of the FCC Rules. These limits are designed to provide reasonable protection against harmful interference in a residential installation. This equipment generates, uses and can radiate radio frequency energy and, if not installed and used in accordance with the instructions, may cause harmful interference to radio communications. However, there is no guarantee that interference will not occur in a particular installation. If this equipment does cause harmful interference to radio or television reception, which can be determined by turning the equipment off and on, the user is encouraged to try to correct the interference by one of the following measures:

- Reorient or relocate the receiving antenna.
- Connect the equipment into an outlet on a circuit different from that to which the receiver is connected.
- Increase the separation between the equipment and receiver.
- Consult the dealer or an experienced radio/TV technician for help.

FCC RADIATION EXPOSURE STATEMENT

This equipment complies with FCC radiation exposure limits set forth for an uncontrolled environment. End users must follow the specific operating instructions for satisfying RF exposure compliance. To maintain compliance with FCC RF exposure compliance requirements, please follow operation instructions as documented in this manual. This transmitter must not be co-located or operating in conjunction with any other antenna or transmitter. This equipment should be installed and operated with a minimum distance of 20 cm between the radiator and your body. The availability of some specific channels and/or operational frequency bands are country dependent and are firmware programmed at the factory to match the intended destination. The firmware setting is not accessible by the end user.

WARRANTY INFORMATION

Product	Smart Ultrasonic Cool Mist Humidifier
Model	Classic 200S
Date of Purchase	
Order ID	

Terms & Policy

Arovast Corporation ("Arovast") warrants this product to the original purchaser to be free from defects in material and workmanship, under normal use and conditions, for a period of one year from the date of original purchase.

Arovast agrees, at our option during the warranty period, to repair any defect in material or workmanship or furnish an equal product in exchange without charge, subject to verification of the defect or malfunction and proof of the date of purchase.

There is no other express warranty. This warranty does not apply:

- If the product has been modified from its original condition;
- If the product has not been used in accordance with directions and instructions in the user manual;
- To damages or defects caused by accident, abuse, misuse or improper or inadequate maintenance;
- To damages or defects caused by service or repair of the product performed by an unauthorized service provider or by anyone other than Arovast;
- To damages or defects occurring during commercial use, rental use, or any use for which the product is not intended;
- To damages or defects exceeding the cost of the product.

Arovast will not be liable for indirect, incidental, or consequential damages in connection with the use of the product covered by this warranty.

This warranty extends only to the original consumer purchaser of the product and is not transferable to any subsequent owner of the product regardless of whether the product is transferred during the specified term of the warranty.

This warranty does not extend to products purchased from unauthorized sellers. Arovast's warranty extends only to products purchased from authorized sellers that are subject to Arovast's quality controls and have agreed to follow its quality controls.

All implied warranties are limited to the period of this limited warranty.

This warranty gives you specific legal rights and you may also have other rights which vary from state to state. Some states do not allow the exclusion or limitation of incidental or consequential damages, so the above limitation or exclusion may not apply to you.

If you discover that your product is defective within the specified warranty period, please contact Customer Support via **support@levoit.com**. **DO NOT** dispose of your product before contacting us. Once our Customer Support Team has approved your request, please return the product with a copy of the invoice and order ID.

Extend Your Warranty by 1 Year

Register your product within 14 days of purchase at **www.levoit.com/warranty** to extend your 1-year warranty by an additional year.

This warranty is made by:

Arovast Corporation
1202 N. Miller St. Suite A
Anaheim, CA 93806

CUSTOMER SUPPORT

If you have any questions or concerns about your new product, please contact our helpful Customer Support Team.

Arovast Corporation
1202 N. Miller St., Suite A
Anaheim, CA 92806

Email: support@levoit.com
Toll-Free: (888) 726-8520

Support Hours

Mon–Fri, 9:00 am–5:00 pm PST/PDT

*Please have your order invoice and order ID ready before contacting Customer Support.

ATTRIBUTIONS

Apple App Store is a trademark of Apple Inc.

Google, Android, and Google Play are trademarks of Google LLC.

Wi-Fi® is a registered trademark of Wi-Fi Alliance®.

Amazon, Alexa and all related logos are trademarks of Amazon.com, Inc. or its affiliates.

iOS is a registered trademark of Cisco Systems, Inc. and/or its affiliates in the United States and certain other countries.

The Bluetooth® word mark and logos are registered trademarks owned by Bluetooth SIG, Inc. and any use of such marks by Arovast Corporation is under license.

NOTES

NOTES

Connect with us @LevoitLifestyle

levoit

levoit.com

A0-01.00_S_20H06