COSORI

User Manual

Smart Air Fryer Toaster Oven

Model: CS100-AO

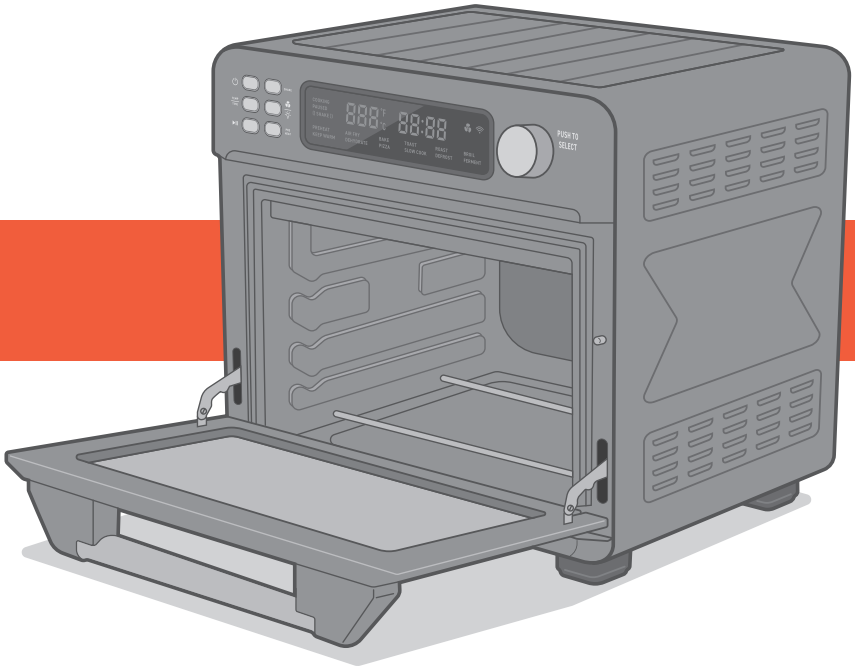

Questions or Concerns?
Mon–Fri, 9:00 am–5:00 pm PST/PDT
support@cosori.com | (888) 402-1684

Thank you for your purchase!

(We hope you love your new smart air fryer toaster oven as much as we do.)

join the Cosori Cooks Community on Facebook
facebook.com/groups/cosoricooks

explore our recipe gallery
www.cosori.com/recipes

enjoy weekly, featured recipes
made exclusively by our in-house chefs

CONTACT OUR CHEFS

Our helpful, in-house chefs are ready to assist you with any questions you might have!

Email: recipes@cosori.com
Toll-Free: (888) 402-1684
M-F, 9:00 am–5:00 pm PST/PDT

On behalf of all of us at Cosori,

Happy cooking!

Table of Contents

Specifications 3
Package Contents 3
Important Safeguards 4
- Key Safety Points 4
- General Safety 4
- While Cooking 5
- Plug & Cord 5
- Electromagnetic Fields (EMF) 5

Getting to Know Your Smart Air Fryer Toaster Oven 6
Display 7
Controls 8
- Control Knob 8
- Power Button 8
- Fan/Light Button 8
- SHAKE Button 8
- TEMP/TIME Button 9
- PREHEAT Button 9
- START/PAUSE Button 9

Before First Use 10
- Setting Up 10
- Test Run 10
- VeSync App Setup 10

Cooking with Your Smart Air Fryer Toaster Oven 11
- Cooking Functions 11
- Customizing Cooking Functions 11
- Cooking Functions Quick Reference Chart 12
- VeSync App Functions 14
- Super Convection Fan 14
- Preheat Function ("PREHEAT") 15
- Keep Warm Function ("KEEP WARM") 16
- Air Fry Function ("AIRFRY") 17
- Dehydrate Function ("DEHYD") 18
- Bake Function ("BAKE") 19
- Pizza Function ("PIZZA") 20
- Toast Function ("TOAST") 21
- Slow Cook Function ("SLOW COOK") 22
- Roast Function ("ROAST") 23
- Defrost Function ("DEFROST") 24
- Broil Function ("BROIL") 25
- Ferment Function ("FERMENT") 26

Care & Maintenance 27
- Cleaning the Accessories 27
- Storage 27

Troubleshooting 28
VeSync App Troubleshooting 29
FCC Statement 30
FCC Radiation Exposure Statement 30
Warranty Information 31
Customer Support 32

Specifications

Power Supply	AC 120V, 60Hz
Rated Power	1800W
Capacity	Approx. 26 qt / 25 L 4-Slice Toaster 12" Pizza
Temperature Range	80°–450°F / 27°–232°C
Time Range	0–24 hr
Weight	22 lb / 9.98 kg (including accessories)
Dimensions	16.3 x 16.9 x 15.5 in / 41.3 x 42.8 x 39.3 cm

Note: *To access additional smart air fryer toaster oven functions, download the free VeSync app (see page 10).*

Package Contents

1 x Smart Air Fryer Toaster Oven
1 x Wire Rack
1 x Food Tray
1 x Fry Basket
1 x Recipe Book
1 x User Manual
1 x Quick Reference Guide

READ AND SAVE THESE INSTRUCTIONS

IMPORTANT SAFEGUARDS

Follow basic safety precautions when using your smart air fryer toaster oven. Read all instructions.

Key Safety Points

- **Do not** touch hot surfaces. Use handle.
- The outside of the oven, including the door, is hot during and after use.
- **Always** use heat-resistant gloves, pads, or oven mitts when handling hot materials, and when placing items in or removing items from the oven, including trays, racks, accessories, or containers.

General Safety

- When the oven is not in use, and before cleaning, press ⏻ to turn it off, then unplug from outlet. Allow to cool completely before putting on or taking off parts.
- **Do not** immerse the housing, cord, or plug in water or liquid.
- Closely supervise children near the oven.
- **Do not** use your oven if it is damaged, not working, or if the cord or plug is damaged. Contact **Customer Support** (see page 32).
- **Do not** use third-party replacement parts or accessories, as this may cause injuries.
- **Do not** use outdoors.
- **Do not** place the oven or any of its parts on a stove, near gas or electric burners, or inside another heated oven.
- Be extremely cautious when removing a tray, basket, or rack if it contains hot oil, grease, or other hot liquids.
- **Do not** clean with metal scouring pads. Metal fragments can break off the pad and touch electrical parts, creating a risk of electric shock.
- Clean the crumb tray after using. Accumulated grease and crumbs can overheat and catch fire.
- **Do not** store anything on top of your oven while it is operating. **Do not** store anything inside your oven other than recommended accessories.
- **Do not** operate with a separate remote-control system.
- **Only** use as directed in this manual.
- Not for commercial use. Household use **only**.

While Cooking

- **Do not** place oversized foods or metal utensils (except for Cosori accessories) into your oven.
- **Do not** place paper, cardboard, or non-heat-resistant plastic into your oven, or any materials which may catch fire or melt.
- To avoid overheating, **do not** use metal foil in the oven unless directed. Use extreme caution when using foil, and **always** fit foil as securely as possible. If the foil contacts the oven's heating elements, this can cause overheating and risk of fire.
- **Never** put baking or parchment paper into the oven without food on top. Air circulation can cause paper to move and touch heating elements.
- **Always** use heat-safe containers. Be extremely cautious if using containers that aren't metal or glass.
- Keep your oven away from flammable materials (curtains, tablecloths, walls, etc.). Use on a flat, stable, heat-resistant surface away from heat sources or liquids.
- Immediately turn off and unplug your oven if you see dark smoke coming out. Food is burning. Wait for smoke to clear before opening the oven door.

Plug & Cord

- Your oven has a polarized plug (one prong is wider than the other), which fits into a polarized outlet only one way. If the plug does not fit, reverse the plug. If it still does not fit, **do not** use the plug in that outlet. **Do not** alter the plug in any way.
- **Do not** let the power cord (or any extension cord) hang over the edge of a table or counter, or touch hot surfaces.

Note: *This oven uses a short power-supply cord to reduce the risk of entangling or tripping. Use extension cords with care. The marked electrical rating of the extension cord must be as great as the rating of the oven (see page 3).*

Electromagnetic Fields (EMF)

This oven complies with all standards regarding electromagnetic fields (EMF). If handled properly and according to the instructions in this user manual, the appliance is safe to use based on scientific evidence available today.

GETTING TO KNOW YOUR SMART AIR FRYER TOASTER OVEN

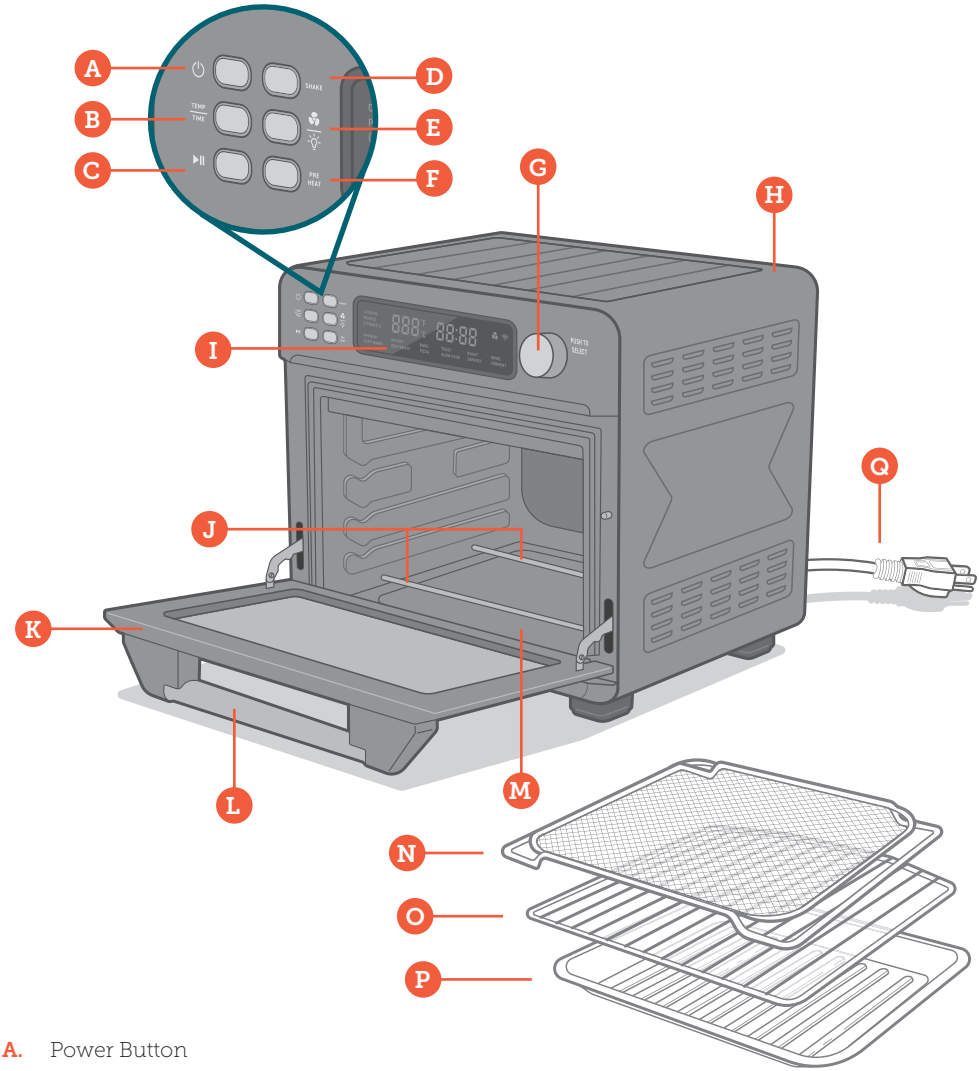

A. Power Button
B. Temp/Time Button
C. Start/Pause Button
D. Shake Button
E. Fan/Light Button
F. Preheat Button
G. Control Knob
H. Housing
I. LED Display
J. Heating Elements
K. Door
L. Handle
M. Crumb Tray
N. Fry Basket
O. Wire Rack
P. Food Tray
Q. Power Cord

DISPLAY

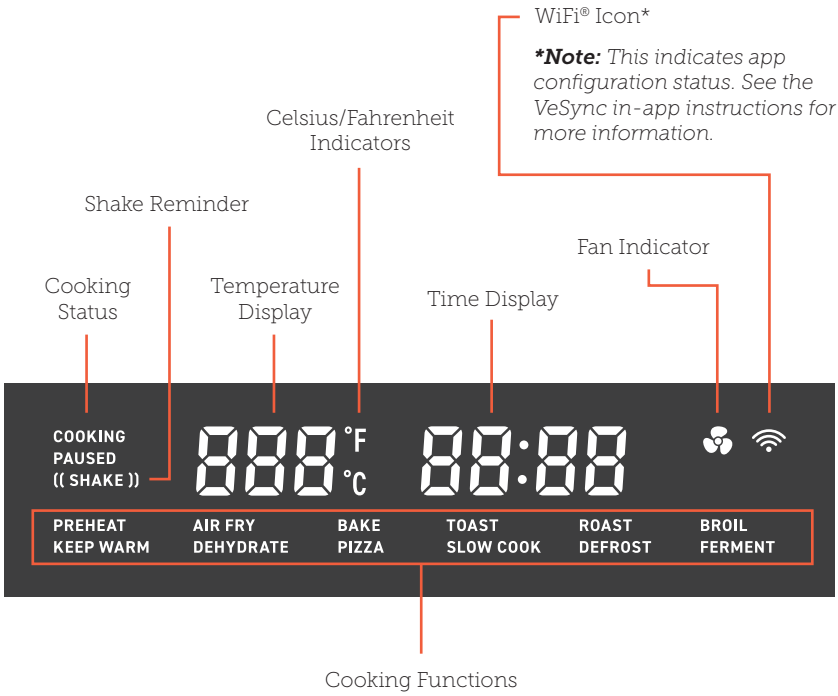
WiFi® Icon*
*Note: This indicates app configuration status. See the VeSync in-app instructions for more information.
Celsius/Fahrenheit Indicators
Shake Reminder
Fan Indicator
Cooking Status
Temperature Display
Time Display
COOKING
PAUSED
((SHAKE))
°F
°C
PREHEAT
KEEP WARM
AIR FRY
DEHYDRATE
BAKE
PIZZA
TOAST
SLOW COOK
ROAST
DEFROST
BROIL
FERMENT
Cooking Functions

CONTROLS

Control Knob

- Turn the knob to change cooking functions. The current function will blink on the display.
- After pressing TEMP/TIME, turn the knob to change temperature/time. Turn clockwise to increase and counterclockwise to decrease.
- After a function or setting is selected, press the knob to confirm the selection. Press the knob a second time to change the function again.
- Press and hold the knob to save new preset settings or to reset a preset to default (see **Customizing Cooking Functions**, page 11).

Power Button

- Press to turn the oven on/off.
- While the oven is cooking or paused, press to cancel cooking. The oven will return to standby.
- Press and hold for 5 seconds to pair with the VeSync app. See the VeSync in-app instructions for more information.
- Press and hold for 15 seconds to reset the oven to factory settings (including removing the oven from the VeSync app and restoring all default cooking function settings).

Fan/Light Button

- Press to turn the fan on/off.
- The fan can be used with all cooking functions. The fan is automatically set when cooking with Air Fry and Dehydrate.
- Press and hold to turn the interior light on/off.

SHAKE Button

- Press to add or remove a Shake Reminder.
- The Shake Reminder will appear halfway through the remaining cooking time. The oven will beep, and **SHAKE** will blink on the display. This will repeat every 60 seconds until you open the oven door to shake food or press the control knob to remove the Shake Reminder.
- The Shake Reminder cannot be added to the Preheat or Toast functions.
- Press and hold for 5 seconds to reset all presets to factory settings. The oven will stay paired with the VeSync app.

TEMP/TIME Button

- Press once to adjust temperature. Press again to adjust time. Turn the control knob clockwise to increase the setting and counterclockwise to decrease the setting.
- Time will adjust in increments of +/- 1, 5, 10, or 15 minutes (see chart).
- Temperature will adjust in increments of +/- 5°F.
- Press and hold to switch temperature units between Fahrenheit and Celsius.

Time Increment Chart

Keep Warm, Air Fry, Bake, Pizza, Slow Cook, Roast, Defrost, Broil	
Below 60 minutes	+/– 1-minute increments
1–2 hours	+/– 5-minute increments
Air Fry, Bake, Pizza, Slow Cook, Roast, Broil	
2–3 hours	+/– 10-minute increments
Above 3 hours	+/– 15-minute increments
Dehydrate, Ferment	
All times	+/– 30-minute increments

PREHEAT Button

- Selects the Preheat function.
- For more information, see **Preheat Function** (page 12).

START/PAUSE Button

- Starts or pauses a cooking function.
- If using automatic preheating, cancels preheating and starts the cooking function immediately. (This will not occur for the manual Preheat function.)
- Blinks when the oven has finished automatic preheating. Press again to start the cooking function. (This will not occur for the manual Preheat function.)
- Press during cooking to change cooking functions.

Note: *When you open the oven door during cooking (such as to shake food), the oven will pause cooking automatically, and the interior light will turn on. When you close the oven door, the oven will resume cooking and the interior light will turn back off.*

BEFORE FIRST USE

Setting Up

1. Remove all packaging around and inside the oven.
2. Place on a stable, level, heat-resistant surface, away from anything that can be damaged by heat.
3. Wash all accessories and clean the oven's interior (see page 27). Dry and place accessories back in oven.

Test Run

A test run will help you become familiar with your oven, make sure it's working correctly, and clean it of possible residues.

1. Make sure there is no food or packaging in the oven and plug it in.
2. Press **PREHEAT** , then press ▶II to begin heating.
3. The ▶II button will light up, and the display will show the timer counting down.
4. The oven will stop heating and beep several times when finished.

VeSync App Setup

Note: *Due to ongoing updates and improvements, the VeSync app may be slightly different than shown in the manual. In case of any differences, follow the in-app instructions.*

1. To download the VeSync app, scan the QR code or search "VeSync" in the Apple App Store® or Google Play Store.

Note: *For Android™ users, choose "Allow" to use VeSync.*

Download on the App Store

GET IT ON Google Play

2. Open the VeSync app. If you already have an account, tap **Log In**. To create a new account, tap **Sign Up**.

Note: *You must create your own VeSync account to use third-party services and products. These will not work with a guest account. With a VeSync account, you can also allow your family and friends to control your smart air fryer toaster oven.*

3. Turn on Bluetooth® on your phone.
4. Tap **+** in the VeSync app and select your smart air fryer toaster oven.
5. Follow the in-app instructions to finish setting up your oven.

Note:

- *You can change the name and icon at any time by going to the smart oven screen and tapping ⚙ .*
- *You can use the VeSync app to connect your smart oven to* ***Amazon Alexa*** *or* ***Google Assistant™.***

COOKING WITH YOUR SMART AIR FRYER TOASTER OVEN

Note: *You can use the VeSync app to control your smart air fryer toaster oven, follow in-app recipes, and more.*

CAUTION:

- The outer surface of the oven, including the oven door, is hot during and after use. Temperature may be over 212°F (100°C). **Do not** touch hot surfaces. Use handle.
- **Always** use heat-resistant gloves, pads, or oven mitts when handling hot materials, and when placing items in or removing items from the oven.

Note: Always *make sure the crumb tray is properly in place at the bottom of the oven when cooking.*

Cooking Functions

Cooking functions are programmed with an ideal time and temperature for cooking certain foods. For more information on each cooking function, see its individual section, or the **Cooking Functions Quick Reference Chart** (see page 12).

Customizing Cooking Functions

- You can customize a cooking function's default settings, including time and temperature.
- To change a function's default settings:

1. When the oven is not cooking or is paused, turn the control knob to select the function you want to change. Press the control knob to confirm your selection.
2. Select the settings you want to set as default.
   a. For Toast, turn the control knob to change the darkness level. For Preheat, turn the control knob to change the temperature.
   b. For other functions, press the TEMP/TIME button to switch between controlling time and temperature, and use the control knob to adjust the time and/or temperature.
   c. Press **PREHEAT** to add/remove automatic preheating.
3. Press and hold the control knob for 5 seconds until the oven beeps 1 time.

- To reset one function:

1. When the oven is not cooking or is paused, turn the control knob to select the function you want to reset. Press the control knob to confirm your selection.
2. Without making any changes, press and hold the control knob for 5 seconds until the oven beeps 1 time.

- To reset all functions:

1. Press and hold **SHAKE** for 5 seconds. This will reset all presets.

Note: You can also customize and reset functions using the VeSync app.

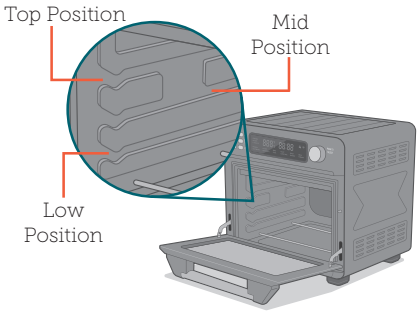

Cooking Functions Quick Reference Chart

Name	Use	Suggested Accessory & Position	Range
Preheat "**PREHEAT**"	• Manually preheat oven	None	• 150°–450°F / 66°–232°C
Keep Warm "**KEEP WARM**"	• Keep food warm at the recommended temperature to prevent bacterial growth (160°F / 71°C or above)	Food tray or wire rack at low position	• 140°–230°F / 60°–110°C • 1 min–1 hr
Air Fry "**AIR FRY**"	• Cooks using intense heat and maximized airflow • Cook food such as french fries and chicken wings • Includes automatic preheat	Fry basket at top position	• 150°–450°F / 66°–232°C • 1 min–6 hr
Dehydrate "**DEHYDRATE**"	• Evenly dry out food without cooking • Dry fruit or vegetable chips	Wire rack or fry basket at top position	• 100°–180°F / 38°–82°C • 30 min–24 hr
Bake "**BAKE**"	• Cook food evenly throughout • Bake cakes, muffins, pastries • Includes automatic preheat	Food tray or wire rack at mid position	• 150°–450°F / 66°–232°C • 1 min–6 hr
Pizza "**PIZZA**"	• Melt and brown cheese and toppings while crisping crust • Includes automatic preheat	Wire rack at mid position	• 150°–450°F / 66°–232°C • 1 min–6 hr
Toast "**TOAST**"	• Toast or brown bread	Wire rack at top position	• Darkness Level 1–7 • Time and temperature are automatic

Slow Cook "**SLOW COOK**"	• Simmer food for long periods of time at low temperatures • Cook soup • ***Note:*** *Usually requires placing cookware on top of tray or rack.*	Food tray or wire rack at low position	• 150°–250°F / 66°–121°C • 1 min–12 hr
Roast "**ROAST**"	• Cook a variety of meats and poultry • Food will be tender and juicy on the inside and well-roasted on the outside. • Includes automatic preheat	Food tray at low position	• 150°–400°F / 66°–204°C • 1 min–6 hr
Defrost "**DEFROST**"	• Thaw frozen food for cooking	Food tray at mid position	• 150°–400°F / 66°–204°C • 1 min–1 hr
Broil "**BROIL**"	• Cook open-faced sandwiches, thin cuts of meat (such as bacon), poultry, fish, sausages, and vegetables • Brown the tops of casseroles, gratins, and desserts • Includes automatic preheat	Food tray at top position	• 150°–450°F / 66°–232°C • 1 min–6 hr
Ferment "**Ferment**"	• Precisely hold low temperatures • Proof bread, rolls, pizza, and dough • Make yogurt	Food tray or wire rack at low position	• 80°–110°F / 27°–43°C • 30 min–12 hr

VeSync App Functions

The VeSync app allows you to access additional smart functions, including those listed below.

Remote Control

- All oven functions can be controlled remotely (except for starting cooking, for safety reasons).
- Cooking progress can be monitored from a distance.

In-App Cosori Recipes

- Pre-programmed recipes made by Cosori's in-house chefs are available in the app. Selecting a recipe automatically sets the recommended time and temperature.
- Create and save custom recipes.

Third-Party Voice Control

- Compatible with Amazon Alexa and Google Assistant for voice commands.

Note: *The VeSync app is continually updated and app features will expand.*

Super Convection Fan

The fan circulates hot air in the oven for faster and more even cooking. Use the fan for crispier results, and for air frying. You can turn the fan on/off at any time during cooking.

Note: *The fan is alwasys on for the Air Fry and Dehydrate functions.*

Preheat Function ("PREHEAT")

This function allows you to manually preheat your oven without selecting another preset.

1. Press **PREHEAT**. "**PREHEAT**" will blink on the display. You can also turn the control knob to select "**PREHEAT**".

2. Optionally, turn the control knob to adjust the temperature between 150°–450°F / 66°–232°C. The time will adjust automatically.

Setting Temperature	Automatic Preheat Time
300°F / 149°C and below	3 min
305°–395°F / 152°–202°C	4 min
400°–430°F / 204°–221°C	5 min
435°–450°F / 224°–232°C	6 min

3. Press ▶II to begin preheating. The ▶II button will light up, and the display will show "**PREHEAT**".

4. The oven will stop heating and beep several times when finished. The temperature will be shown on the display.

5. Select a cooking function and follow the instructions in the appropriate section to begin cooking.

Automatic Preheat

Air Fry, Bake, Pizza, Roast, and Broil all use automatic preheat. You can also use the manual Preheat function for any cooking function (see page 12).

Note: *You can add automatic preheat to any preset (see **Customizing Cooking Functions**, page 11).*

1. When you start a cooking function by pressing ▶II , preheating will start automatically. The ▶II button will light up, and the display will show "**PREHEAT**"

   - Pressing ▶II again during preheating will cancel preheating and immediately start cooking.
   - Preheating times adjust automatically based on the temperature setting (see **Preheat Times** chart, page 15).

2. When preheating is finished, the oven will beep several times and the display will flash. This will repeat once every minute. The ▶II button will blink continuously until cooking is started begins pressed again.

   - After 10 minutes of inactivity, the cooking function will cancel, the oven will stop heating, and the display will reset.

3. Open the oven door to place food inside, then close the oven door to start cooking automatically. You can also press ▶II or press the control knob to begin cooking if the food is already in the oven. The ▶II button will light up, and the display will show the timer counting down.

Keep Warm Function ("KEEP WARM")

This function is designed to keep food warm at the recommended temperature to prevent bacterial growth (160°F / 71°C or above).

Heating Elements: Bottom heating elements cycle on and off.

Rack Position: Low

1. Place hot food in a heat-safe container. Cover and place on the food tray or wire rack. Insert at low position and close the oven door.
2. Turn the control knob to "**WARM**", which will blink on the display. Press the control knob to confirm your selection.
3. Optionally, customize the temperature and time. You can do this anytime during cooking.
   a. Press TEMP/TIME once to control temperature. Turn the control knob to adjust the temperature between 140°–230°F / 60°–110°C.
   b. Press TEMP/TIME again to control time. Turn the control knob to adjust the time between 1 min–1 hr.
4. Press ▶II to begin warming. The button will light up, and the display will show the timer counting down.
5. The oven will stop heating and beep several times when finished.

Air Fry Function ("AIR FRY")

This function is ideal for cooking a variety of food, including french fries and chicken wings. Uses intense heat and maximized airflow.

Heating Elements: Upper heating elements cycle on and off.

Rack Position: Top

1. Turn the control knob to "**AIR FRY**", which will blink on the display. Press the control knob to confirm your selection.

2. Optionally, customize the temperature and time. You can do this anytime during cooking (except during preheating).

   a. Press TEMP/TIME once to control temperature. Turn the control knob to adjust the temperature between 150°–450°F / 66°–232°C.

   b. Press TEMP/TIME again to control time. Turn the control knob to adjust the time between 1 min–6 hr.

Note:

- *For many air frying recipes, we recommend adding a Shake Reminder. Press* **SHAKE** *to add or remove a Shake Reminder.*
- *Small foods that are stacked, such as fries or nuggets, will usually need shaking. You can flip other foods, such as steak, to ensure even browning.*

3. Press ▶II to begin. Preheating will start automatically. The ▶II button will light up, and the display will show "**PREHEAT**".

Note: *Pressing ▶II again during preheating will cancel preheating and immediately start cooking.*

4. When preheating completes, the oven will beep several times, the display will flash, and the ▶II button will blink continuously.

5. Place food in the fry basket.

   a. Avoid overfilling the fry basket, or food may not air fry correctly.

   b. When air frying fatty foods (such as chicken wings), insert the food tray underneath the fry basket to catch oil drippings.

6. Insert at top position.

7. Close the oven door to begin cooking (or press ▶II or the control knob if food is already inside). The ▶II button will light up, and the display will show the timer counting down.

Note: *If you added a Shake Reminder, the reminder will appear halfway through the cooking time. The oven will beep, and* **SHAKE** *will blink on the display. Follow these instructions:*

   a. Take the fry basket out of the oven, being careful of hot steam. The oven will pause cooking automatically as long as the oven door is open.

   b. Shake or flip the food.

   c. Put the fry basket back into the oven. Cooking will automatically resume when you close the oven door.

8. The oven will stop heating and beep several times when finished.

Dehydrate Function ("DEHYD")

This function combines low and stable heat with steady airflow to evenly dry out foods without cooking. Ideal for drying fruit or vegetable chips.

Heating Elements: Bottom heating elements cycle on and off.

Rack Position: Top

1. Place food on the wire rack or fry basket.
   a. When dehydrating foods that may drip, such as marinated jerky, place the food tray in the low rack position to catch drippings.
   b. Optionally, to prevent staining when dehydrating certain foods (such as beets or marinated meats with dark sauces), line the rack or basket with baking paper.
      i. **Never** put baking or parchment paper into the oven without food on top. Air circulation can cause paper to move and touch heating elements.
2. Insert wire rack or fry basket at topmid position. Close the oven door.
3. Turn the control knob to "**DEHYDRATE**", which will blink on the display. Press the control knob to confirm your selection.
4. Optionally, customize the temperature and time. You can do this anytime during cooking.
   a. Press TEMP/TIME once to control temperature. Turn the control knob to adjust the temperature between 100°–180°F / 38°–82°C.
   b. Press TEMP/TIME again to control time. Turn the control knob to adjust the time between 30 min–24 hr.
5. Press ▶II to begin dehydrating. The button will light up, and the display will show the timer counting down.
6. The oven will stop heating and beep several times when finished.

Bake Function ("BAKE")

This function cooks food evenly throughout. Ideal for baking cakes, muffins, brownies, and pastries. Also ideal for cooking pre-packaged frozen meals, including lasagna and pot pies.

Heating Elements: 2 Upper and all bottom heating elements cycle on and off.

Rack Position: Mid

1. If using the wire rack, insert at mid position and close the oven door.
2. Turn the control knob to "**BAKE**", which will blink on the display. Press the control knob to confirm your selection.
3. Optionally, customize the temperature and time. You can do this anytime during cooking (except during preheating).
   a. Press TEMP/TIME once to control temperature. Turn the control knob to adjust the temperature between 150°–450°F / 66°–232°C.
   b. Press TEMP/TIME again to control time. Turn the control knob to adjust the time between 1 min–6 hr.
4. Press ▶II to begin. Preheating will start automatically. The ▶II button will light up, and the display will show "**PREHEAT**".

Note: *Pressing ▶II again during preheating will cancel preheating and immediately start cooking.*

5. When preheating is finished, the oven will beep several times, the display will flash, and the ▶II button will blink continuously.
6. Place food inside the oven. If using the food tray, insert at mid position.

Note:
- *Citric acid (from oranges, lemons, and other foods) may damage the porcelain enamel finish of the trays or racks. Line the trays with foil or baking paper.*
- *Use extreme caution when using foil, and* ***always*** *fit foil as securely as possible. To avoid overheating and risk of fire, make sure foil does not contact the heating elements.*

7. Close the oven door to begin cooking (or press ▶II or the control knob if food is already inside). The ▶II button will light up, and the display will show the timer counting down.
8. The oven will stop heating and beep several times when finished.

Pizza Function ("PIZZA")

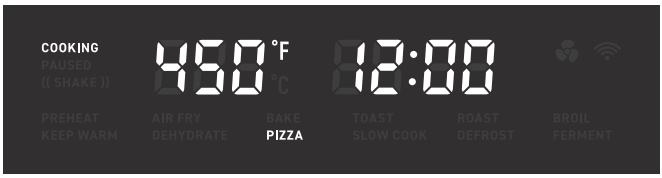

This function melts and browns cheese and toppings while crisping crust.

Heating Elements: Top and bottom heating elements cycle on and off.

Rack Position: Mid

1. Insert wire rack at mid position and close the oven door.

2. Turn the control knob to "**PIZZA**", which will blink on the display. Press the control knob to confirm your selection.

3. Optionally, customize the temperature and time. You can do this anytime during cooking (except during preheating).

   a. Press TEMP/TIME once to control temperature. Turn the control knob to adjust the temperature between 150°–450°F / 66°–232°C.

   b. Press TEMP/TIME again to control time. Turn the control knob to adjust the time between 1 min–6 hr.

Note: *Try a slightly longer cooking time for pizzas with thicker crust, and an even longer cooking time for frozen pizzas.*

4. Press ▶II to begin. Preheating will start automatically. The ▶II button will light up, and the display will show "**PREHEAT**".

Note: *Pressing ▶II again during preheating will cancel preheating and immediately start cooking.*

5. When preheating is finished, the oven will beep several times, the display will flash, and the ▶II button will blink continuously.

6. Remove any cardboard, plastic, paper, or other flammable materials. Place pizza on a pan, and place the pan on the wire rack.

7. Close the oven door to begin cooking (or press ▶II or the control button if food is already inside). The ▶II button will light up, and the display will show the timer counting down.

Note: *For large pizzas, open the oven door halfway through cooking and carefully turn the pizza 90 degrees for more even browning.*

8. The oven will stop heating and beep several times when finished.

Toast Function ("TOAST")

This function browns the outside of your bread while keeping the inside soft. Also ideal for English muffins and frozen waffles.

Heating Elements: Top and bottom heating elements cycle on and off.

Rack Position: Top

1. Place up to 4 slices of bread on the wire rack. Insert the wire rack at top position and close the oven door.

2. Turn the control knob to "**TOAST**", which will blink on the display. Press the control knob to confirm your selection.

3. Optionally, customize the darkness level. You can only do this before cooking starts.

   a. Press TEMP/TIME. Turn the control knob to adjust the darkness level between 1–7.

   b. Use 1–2 for a light toast, 3–5 for a medium toast, and 6–7 for a dark toast.

Note:

- *When setting the darkness level, consider the type, thickness, and freshness of the bread.*
  - *Try lighter settings for raisin toast, white bread, and thinly-sliced bread.*
  - *Try darker settings for rye, whole wheat, heavier-textured bread, and fresh bread.*
- *Time and temperature are set automatically. Time increases with darkness level. Temperature is set to the highest level (450°F / 232°C).*

4. Press ▶II to begin. The button will light up, and the display will show the timer counting down.

5. The oven will stop heating and beep several times when finished.

Slow Cook Function ("SLOW COOK")

This function is ideal for simmering food for long periods of time at low temperatures, such as when cooking soup.

Heating Elements: Bottom heating elements cycle on and off.

Rack Position: Low

1. Place food in a heat-safe container. Cover and place on the food tray or wire rack. Insert at low position and close the oven door.

Note:

- *Make sure cookware is oven-proof and does not weigh over 6 lb when full.*
- *Fill container to a minimum of halfway and a maximum of 3/4 full to avoid spilling and over- or under-cooking.*
- ***Always** slow cook with a lid on the container to prevent food from drying out.*
- ***Do not** slow cook frozen foods.*
- *Cut large pieces of meat in half to allow even heating.*

2. Turn the control knob to "**SLOW COOK**", which will blink on the display. Press the control knob to confirm your selection.

3. Optionally, customize the temperature and time. You can do this anytime during cooking.

   a. Press TEMP/TIME once to control temperature. Turn the control knob to adjust the temperature between 150°–250°F / 66°–121°C.

   b. Press TEMP/TIME again to control time. Turn the control knob to adjust the time between 1 min–12 hr.

4. Press ▶II to begin cooking. The button will light up, and the display will show the timer counting down.

5. The oven will stop heating and beep several times when finished.

Roast Function ("ROAST")

This function is ideal for cooking a variety of meats and poultry. Food will be tender and juicy on the inside and well-roasted on the outside.

Heating Elements: 2 Upper and all bottom heating elements cycle on and off.

Rack Position: Low

1. Turn the control knob to "**ROAST**", which will blink on the display. Press the control knob to confirm your selection.

2. Optionally, customize the temperature and time. You can do this anytime during cooking (except during preheating).

   a. Press TEMP/TIME once to control temperature. Turn the control knob to adjust the temperature between 150°–400°F / 66°–204°C.

   b. Press TEMP/TIME again to control time. Turn the control knob to adjust the time between 1 min–6 hr.

3. Press ▶II to begin. Preheating will start automatically. The ▶II button will light up, and the display will show "**PREHEAT**".

Note: *Pressing ▶II again during preheating will cancel preheating and immediately start cooking.*

4. When preheating completes, the oven will beep several times, the display will flash, and the ▶II button will blink continuously.

5. Place food inside the oven. Insert the food tray at low position.

Note:

- *Citric acid (from oranges, lemons, and other foods) may damage the porcelain enamel finish of the trays or racks. Line the trays with foil or baking paper.*
- *Use extreme caution when using foil, and* ***always*** *fit foil as securely as possible. To avoid overheating and risk of fire, make sure foil does not contact the heating elements.*

6. Close the oven door to begin cooking (or press ▶II or the control knob if food is already inside). The ▶II button will light up, and the display will show the timer counting down.

7. The oven will stop heating and beep several times when finished.

Defrost Function ("DEFROST")

This function is designed to thaw frozen food for cooking.

Heating Elements: 2 Upper and all bottom heating elements cycle on and off.

Rack Position: Mid

1. Place frozen food on the food tray. Insert at mid position and close the oven door.
2. Turn the control knob to "**DEFROST**", which will blink on the display. Press the control knob to confirm your selection.
3. Optionally, customize the temperature and time. You can do this anytime during cooking.
   a. Press TEMP/TIME once to control temperature. Turn the control knob to adjust the temperature between 150°–400°F / 66°–204°C.
   b. Press TEMP/TIME again to control time. Turn the control knob to adjust the time between 1 min–1 hr.
4. Press ▶II to begin cooking. The button will light up, and the display will show the timer counting down.
5. The oven will stop heating and beep several times when finished.

Broil Function ("BROIL")

This function is ideal for cooking open-faced sandwiches, thin cuts of meat (such as bacon), poultry, fish, sausages, and vegetables.

Heating Elements: Upper heating elements cycle on and off.

Rack Position: Top

1. Turn the control knob to "**BROIL**", which will blink on the display. Press the control knob to confirm your selection.

2. Optionally, customize the temperature and time. You can do this anytime during cooking (except during preheating).

   a. Press TEMP/TIME once to control temperature. Turn the control knob to adjust the temperature between 150°–450°F / 66°–232°C.

   b. Press TEMP/TIME again to control time. Turn the control knob to adjust the time between 1 min–6 hr.

3. Press ▶II to begin. Preheating will start automatically. The ▶II button will light up, and the display will show "**PREHEAT**".

Note: *Pressing ▶II again during preheating will cancel preheating and immediately start cooking.*

4. When preheating completes, the oven will beep several times, the display will flash, and the ▶II button will blink continuously.

5. Place food on the food tray.

   a. Optionally, lightly grease the enamel food tray or line with foil to prevent food from sticking.

   b. Use extreme caution when using foil, and **always** fit foil as securely as possible. To avoid overheating and risk of fire, make sure foil does not contact the heating elements.

6. Insert the food tray at top position.

   a. Insert at mid position instead for:

      - *Bulky food that may touch the upper heating elements*
      - *Thicker food such as burger patties*
      - *Marinated food such as chicken wings*
      - *Food requiring a gentler broil*

7. Close the oven door to begin cooking (or press ▶II or the control knob if food is already inside). The ▶II button will light up, and the display will show the timer counting down.

8. The oven will stop heating and beep several times when finished.

Ferment Function ("FERMENT")

This function is designed to precisely hold low temperatures, providing an ideal environment for proofing bread, rolls, pizza, and dough.

Can also be used for making yogurt with an appropriate recipe (using 110°F / 43°C temperature and 12 hr time).

Heating Elements: Bottom heating elements cycle on and off.

Rack Position: Low

1. Place dough in a heat-safe container. Cover and place on the food tray or wire rack. Insert at low position and close the oven door.

2. Turn the control knob to "**FERMENT**", which will blink on the display. Press the control knob to confirm your selection.

3. Optionally, customize the temperature and time. You can do this anytime during cooking.

   a. Press TEMP/TIME once to control temperature. Turn the control knob to adjust the temperature between 80°–110°F / 27°–43°C.

   b. Press TEMP/TIME again to control time. Turn the control knob to adjust the time between 30 min–12 hr.

4. Press ▶II to begin fermentation. The button will light up, and the display will show the timer counting down.

5. The oven will stop heating and beep several times when finished.

CARE & MAINTENANCE

Clean oven accessories (including trays, etc.) and oven interior after every use.

Note:

- *The walls on the inside of the oven have a nonstick coating for easy cleaning.*
- ***Do not** use abrasive cleaners, metal scouring pads, or metal utensils on any part of the oven, including trays and other accessories. These will scratch or damage their surfaces.*
- *This oven contains no user-serviceable parts. Any repairs should be performed by an authorized service representative.*

1. Before cleaning, turn off and unplug the oven, and allow it to cool completely. Open the door for faster cooling.
2. Apply non-abrasive liquid cleanser or a mild spray solution to a soft, damp cloth or sponge (not the oven surface) and wipe all parts of the oven. **Do not** use a dry cloth on the display screen, or it may be scratched.
3. To clean the glass door, use a glass cleaner or mild detergent and a soft, damp sponge or soft, plastic scouring pad.
4. Let all surfaces dry completely before plugging in or turning on the oven.

Cleaning the Accessories

***Note:** After each use, slide out the crumb tray and discard crumbs.*

1. Apply non-abrasive liquid cleanser or a mild spray solution to a soft, damp sponge or soft, plastic scouring pad (not the accessory surface). Wipe accessories and soak in warm, soapy water if necessary.
2. For stubborn grease:
   a. In a small bowl, mix 2 US tbsp / 30 mL of baking soda with 1 US tbsp / 15 mL of water to form a spreadable paste.
   b. Use a sponge to spread the paste on the trays and scrub. Let the trays sit for 15 minutes before rinsing.
   c. Wash trays with soap and water.
3. Dry thoroughly.
4. Replace the crumb tray into the oven before plugging in or turning on the oven.

Storage

1. Clean and dry the oven and all accessories.
2. Insert the crumb tray into the oven. Insert the rack at mid position. Make sure the oven door is closed.
3. Store the oven in an upright position. **Do not** store anything on top.

TROUBLESHOOTING

Problem	Possible Solution
The oven will not turn on.	Make sure the oven is plugged in.
Food is not completely cooked.	Increase cooking temperature or time.
Food is overcooked or burned.	Decrease cooking temperature or time.
	Make sure food items are not too large and are not touching the heating elements.
Food is cooked unevenly.	Preheat the oven manually by using the Preheat function.
	Make sure food items are not too closely packed into a tray, rack, or other container.
White smoke or steam is coming out of the oven.	The oven may produce some white smoke or steam during cooking. This is normal.
	During first use, dust from the packing process may cause white smoke. This is normal for toaster ovens and many other kitchen appliances. To eliminate any dust, see **Test Run** (page 10).
	Excess oil or fatty foods may produce white smoke. Make sure the inside of the oven is cleaned properly and isn't greasy.
Dark smoke is coming out of the oven.	Immediately press ▶II and unplug your oven. Food is burning. Wait for smoke to clear before opening the oven door.
A thermometer shows that the oven temperature is different from the oven setting.	Commonly used thermometers usually have low sensitivity and take over 10 minutes to measure the correct temperature. This will not affect cooking.
Display shows Error Code "E1".	There is an open circuit in the temperature monitor. Contact **Customer Support** (see page 32).
Display shows Error Code "E2".	There is a short circuit in the temperature monitor. Contact **Customer Support** (see page 32).
Display shows Error Code "E7".	The oven has been plugged into an incorrect power source, such as a 220–240V outlet. Unplug the oven. **Only** use the oven with 120V, 60Hz outlets, such as those in the US and Canada.

If your problem is not listed, please contact **Customer Support** (see page 32).

VESYNC APP TROUBLESHOOTING

Problem	Possible Solution
Why isn't my oven connecting to the VeSync app?	During the setup process, you must be on a secure 2.4 GHz WiFi® network. Confirm that the network is working correctly.
	Make sure the WiFi password you entered is correct.
	Turn on Bluetooth® on your phone (for Android users, make sure Location is turned on as well).
	Make sure your oven and phone are within 30 ft / 10 m of each other.
	Reset the oven by pressing and holding ⏻ for 15 seconds, then try connecting again.
My oven is offline.	Make sure the oven is plugged in. The oven may appear to be offline if it is unplugged, or if the outlet does not have power.
	Refresh the VeSync menu by swiping down on the screen.
	Make sure your router is connected to the internet and your phone's network connection is working.
	Delete the oven from the VeSync app. Swipe left (iOS)® or tap and hold (Android), and tap **Delete**. Then reconfigure your oven with the VeSync app.

Note: *Power outages, internet outages, or changing WiFi routers may cause your toaster oven to go offline.*

If your problem is not listed, please contact **Customer Support** (see page 32).

FCC STATEMENT

This device complies with Part 15 of the FCC Rules. Operation is subject to the following two conditions:

1. This device may not cause harmful interference, and
2. This device must accept any interference received, including interference that may cause undesired operation.

Any changes or modifications not expressly approved by the party responsible for compliance could void the user's authority to operate this equipment.
This equipment has been tested and found to comply with the limits for a Class B digital device, pursuant to Part 15 of the FCC Rules. These limits are designed to provide reasonable protection against harmful interference in a residential installation. This equipment generates, uses and can radiate radio frequency energy and, if not installed and used in accordance with the instructions, may cause harmful interference to radio communications. However, there is no guarantee that interference will not occur in a particular installation. If this equipment does cause harmful interference to radio or television reception, which can be determined by turning the equipment off and on, the user is encouraged to try to correct the interference by one of the following measures:

- Reorient or relocate the receiving antenna.
- Connect the equipment into an outlet on a circuit different from that to which the receiver is connected.
- Increase the separation between the equipment and receiver.
- Consult the dealer or an experienced radio/TV technician for help.

FCC RADIATION EXPOSURE STATEMENT

This equipment complies with FCC radiation exposure limits set forth for an uncontrolled environment. End users must follow the specific operating instructions for satisfying RF exposure compliance. To maintain compliance with FCC RF exposure compliance requirements, please follow operation instructions as documented in this manual. This transmitter must not be co-located or operating in conjunction with any other antenna or transmitter. This equipment should be installed and operated with a minimum distance of 20 cm between the radiator and your body. The availability of some specific channels and/or operational frequency bands are country dependent and are firmware programmed at the factory to match the intended destination. The firmware setting is not accessible by the end user.

WARRANTY INFORMATION

Product	*Smart Air Fryer Toaster Oven*
Model	*CS100-AO Series*
Default Warranty Peroid	*1 year*
For your own reference, we strongly recommend that you record your order ID and date of purchase.	
Order ID	
Date of Purchase	

TERMS & POLICY

Arovast Corporation ("Arovast") warrants this product to the original purchaser to be free from defects in material and workmanship, under normal use and conditions, for a period of one year from the date of original purchase.

Arovast agrees, at our option during the warranty period, to repair any defect in material or workmanship or furnish an equal product in exchange without charge, subject to verification of the defect or malfunction and proof of the date of purchase.

There is no other express warranty. This warranty does not apply:

- If the product has been modified from its original condition;
- If the product has not been used in accordance with directions and instructions in the user manual;
- To damages or defects caused by accident, abuse, misuse or improper or inadequate maintenance;
- To damages or defects caused by service or repair of the product performed by an unauthorized service provider or by anyone other than Arovast;
- To damages or defects occurring during commercial use, rental use, or any use for which the product is not intended;
- To damages or defects exceeding the cost of the product.

Arovast will not be liable for indirect, incidental, or consequential damages in connection with the use of the product covered by this warranty.

This warranty extends only to the original consumer purchaser of the product and is not transferable to any subsequent owner of the product regardless of whether the product is transferred during the specified term of the warranty.

This warranty does not extend to products purchased from unauthorized sellers. Arovast's warranty extends only to products purchased from authorized sellers that are subject to Arovast's quality controls and have agreed to follow its quality controls.

ALL IMPLIED WARRANTIES ARE LIMITED TO THE PERIOD OF THIS LIMITED WARRANTY.

This warranty gives you specific legal rights and you may also have other rights which vary from state to state. Some states do not allow the exclusion or limitation of incidental or consequential damages, so the above limitation or exclusion may not apply to you.

If you discover that your product is defective within the specified warranty period, please contact Customer Support via **support@cosori.com. DO NOT** dispose of your product before contacting us. Once our Customer Support Team has approved your request, please return the product with a copy of the invoice and order ID.

Extend Your Warranty by 1 Year

Register your product within 14 days of purchase at **www.cosori.com/warranty** to extend your 1-year warranty by an additional year.

This warranty is made by:

Arovast Corporation
1202 N. Miller St. Suite A
Anaheim, CA 93806

CUSTOMER SUPPORT

If you have any questions or concerns about your new product, please contact our helpful Customer Support Team.

Arovast Corporation
1202 N. Miller St., Suite A
Anaheim, CA 92806

Email: support@cosori.com
Toll-Free: (888) 402-1684

Support Hours

Mon–Fri, 9:00 am–5:00 pm PST/PDT

** Please have your invoice and order ID ready before contacting Customer Support.*

Attributions

Apple App Store is a trademark of Apple Inc.
Google, Android and Google Play are trademarks of Google LLC.
Wi-Fi® is a registered trademark of Wi-Fi Alliance®.
Amazon, Alexa and all related logos are trademarks of Amazon.com, Inc. or its affiliates.
iOS is a registered trademark of Cisco Systems, Inc. and/or its affiliates in the United States and certain other countries.
The Bluetooth® word mark and logos are registered trademarks owned by Bluetooth SIG, Inc. and any use of such marks by Arovast is under license.

NOTES

NOTES

SHOW US WHAT YOU'RE MAKING

We hope this manual has been helpful. We can't wait to see your beautiful results, and we think you'll want to share glam shots! Our community awaits your uploads—just pick your platform of choice below. Snap, tag, and hashtag away, Cosori chef!

Considering what to cook? Many recipe ideas are available, both from us and the Cosori community.

#iCookCosori

@cosoricooks

Cosori Appliances

MORE COSORI PRODUCTS

If you're happy with this air fryer toaster oven, the line doesn't stop here. Check out **www.cosori.com** for a line of all our beautiful and thoughtfully designed cookware. They might be right at home in your kitchen, too!

COSORI

Questions or Concerns?

support@cosori.com | (888) 402-1684
Mon–Fri, 9:00 am–5:00 pm PST/PDT

JJ082020GY-M1_0720CS100-AO