1. Parts List

Receiver Group

2.4G Receiver Antenna

2.4G Antenna Cable(3 米)

DC12V Adaptor and RX IP Extender

NVR

Transmitted Group

2.4G Antenna

2.4G antenna Cable(30CM)

DC12V Adaptor and TX IP Extender

IP Camera

Infrared IP Camera

No.	Parts number	Parts name/ Specification.	Qty	Remark
1	F-CS-WIFIRX-001	2.4G Receiver IP extender	1	
2	F-CS-WIFIRX-002	2.4G Receiver Antenna/ 12dbi	1	
3	F-CS-WIFIRX-003	2.4G Antenna Cable(3m)/ RP-SMA Male to N Type Male	1	
4	F-CS-WIFITX-001	2.4G transmitted IP extender	1	
5	F-CS-WIFITX-002	2.4G Transmitted Antenna/ 14dbi	1	
6	F-CS-WIFITX-003	2.4G Antenna Cable(30 cm)/ RP-SMA Male to N Type Male	1	
7	NVR019	NVR 4CH/ 4/8/16CH NVR	1	
8	F-CS-I13-D09-40-B4-1	IP Camera Full HD 1080P	1	Infrared/ normal
9	Adapter014	POWER 2A AC in 110 ~ 230 V Output DC 12 V / 2 A	2	

Transmitted Group

2. Installation guide

Wlan Infrastructure-1 in Elevators.

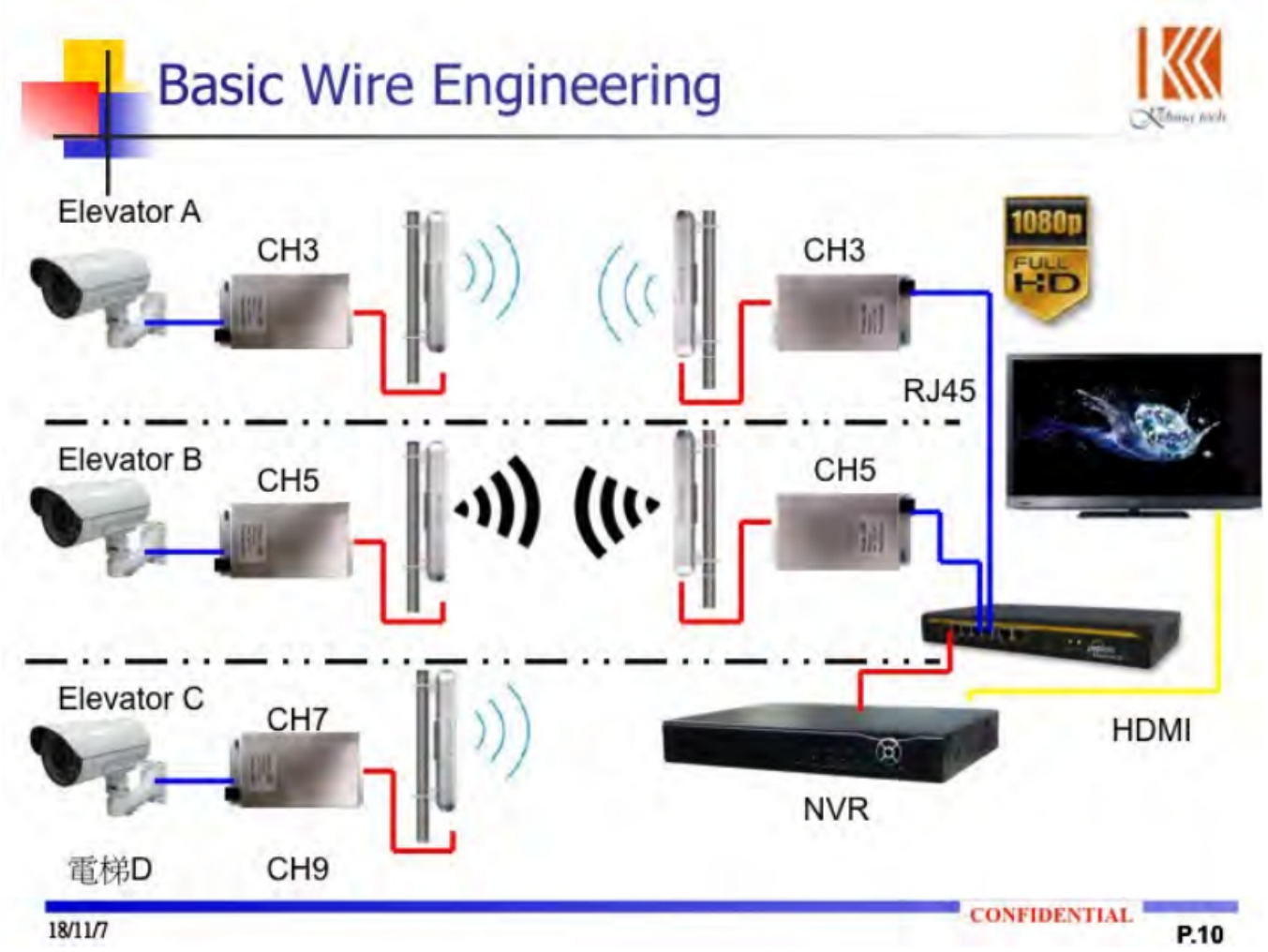

Wlan installation structure in Elevators.

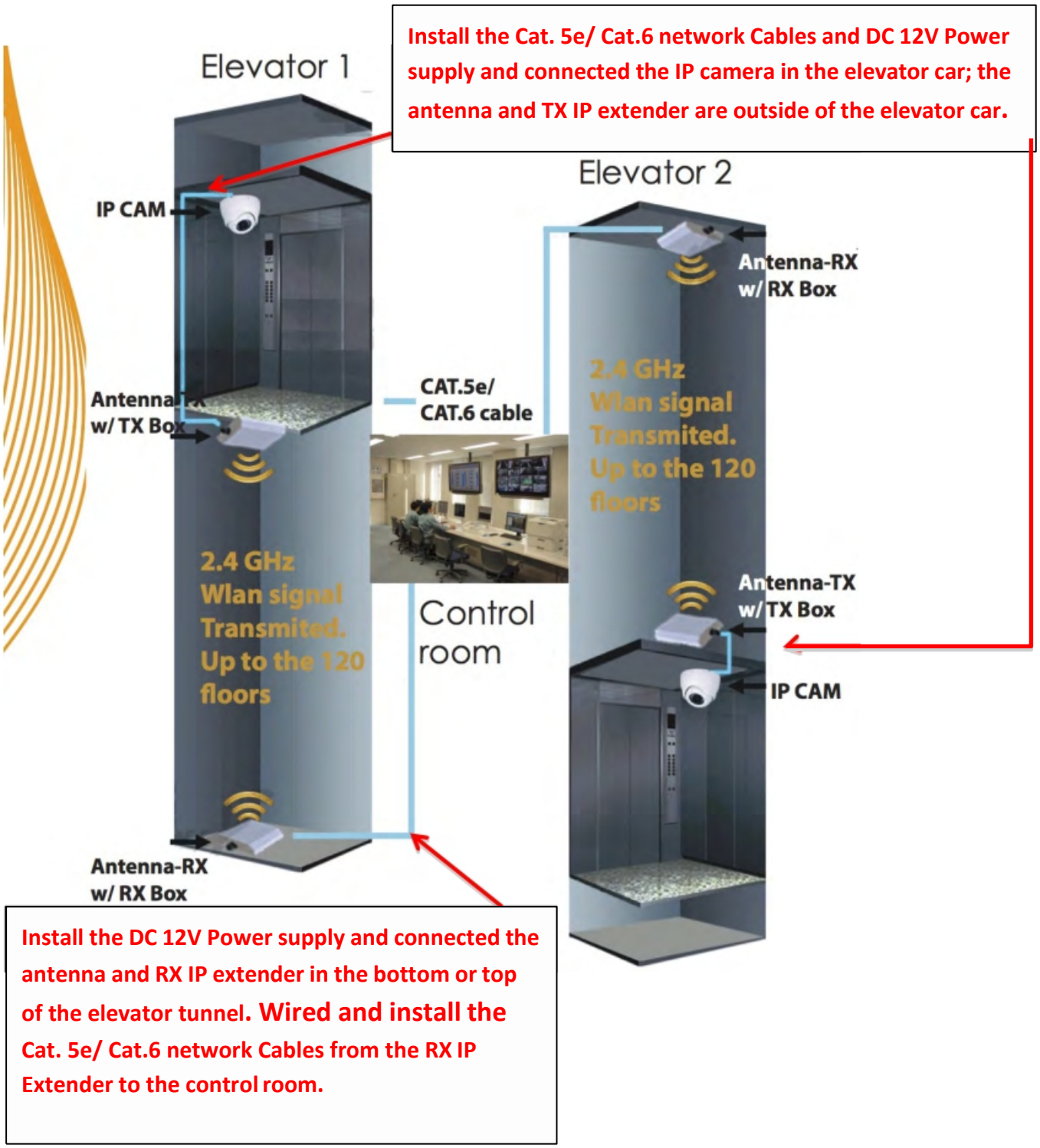

3. The Procedure:

1. The IP camera installs inside of the elevator car and connect the DC power supply with the elevator car.
2. And install the TX IP Extender and the transmitting antenna are on the bottom of the elevator car; and install other DC power supply to the TX IP Extender. Then, Use the 30cm antenna cable connect the antenna and IP Extender.
3. Install and Connect the Cat.5e/ 6 cable with IP Camera and TX IP Extender.

4. The supplied L-shaped iron plate can be used and install at the bottom of the elevator car or to use the fixed-beam to fixed transmitting antenna can be changed, depend on varieties site environments.
   (The same fixed methods with receiving antenna.)

Elevator surveillance with Wlan solution/ User guide

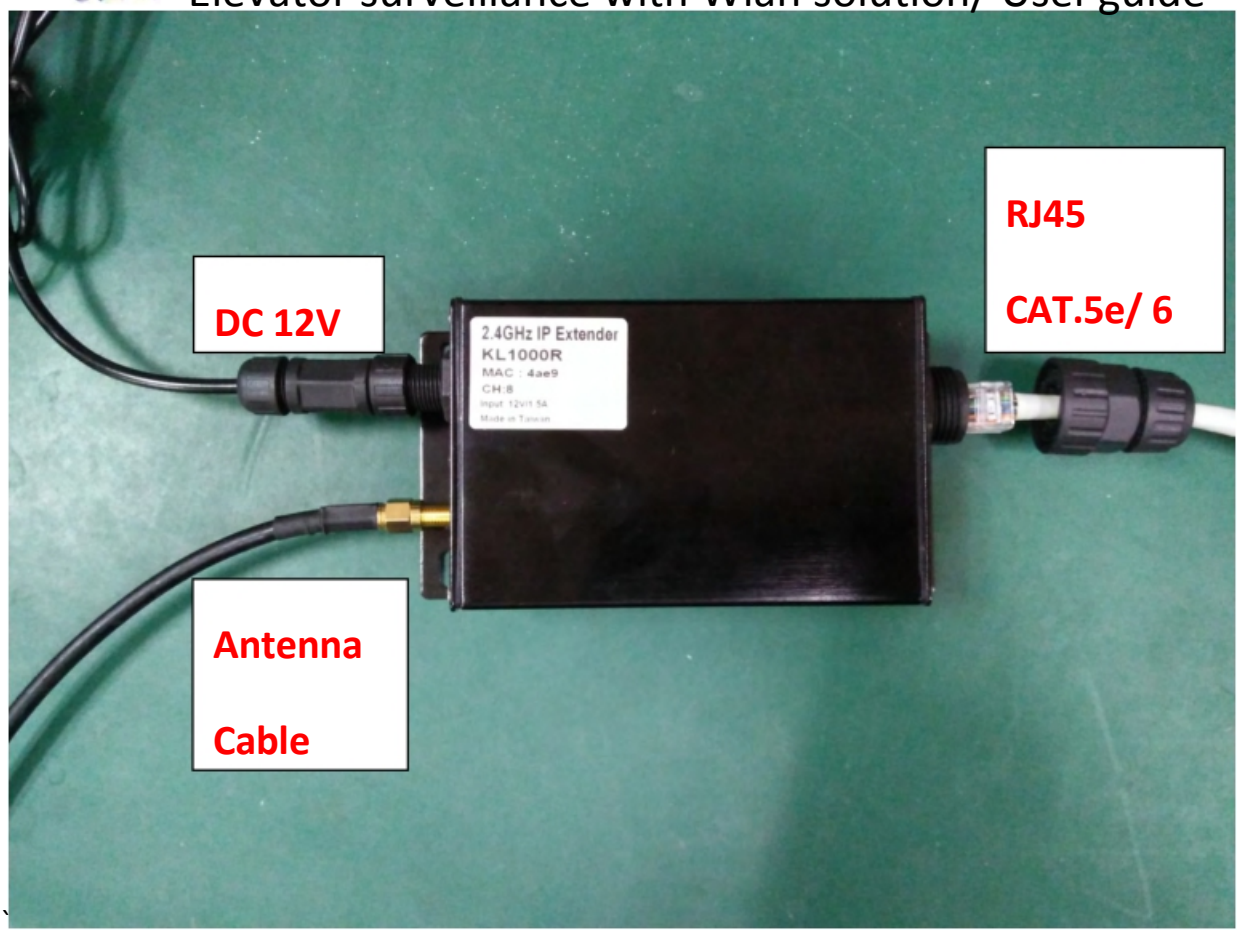

The each waterproof connector needs to be locked, the power supply, antenna, and network RJ45 on the RX/ TX IP Extender.

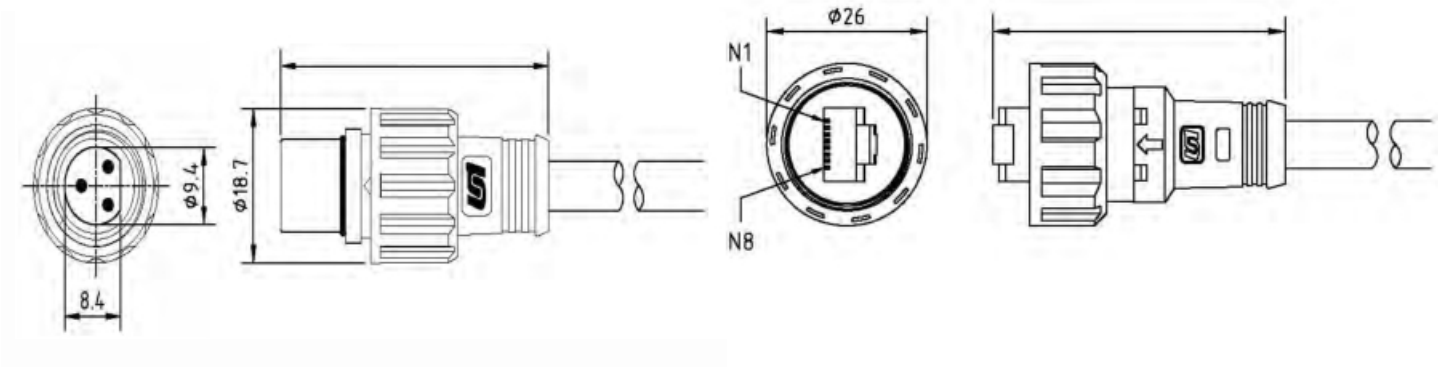

Example

Wlan Installation Photo (The Building height under the 45 floors)

Receiver

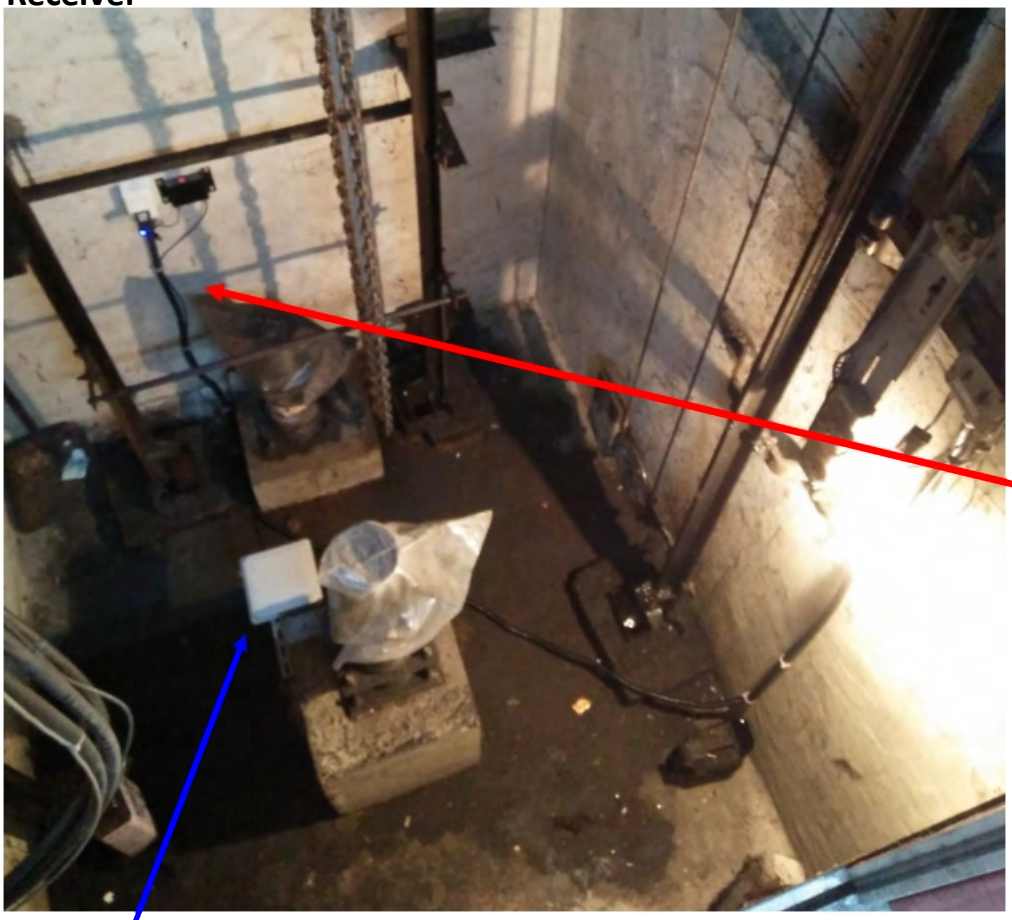

Receiver use 3m

Transmitter use 30 cm

ANTENNA

Transmitter TX

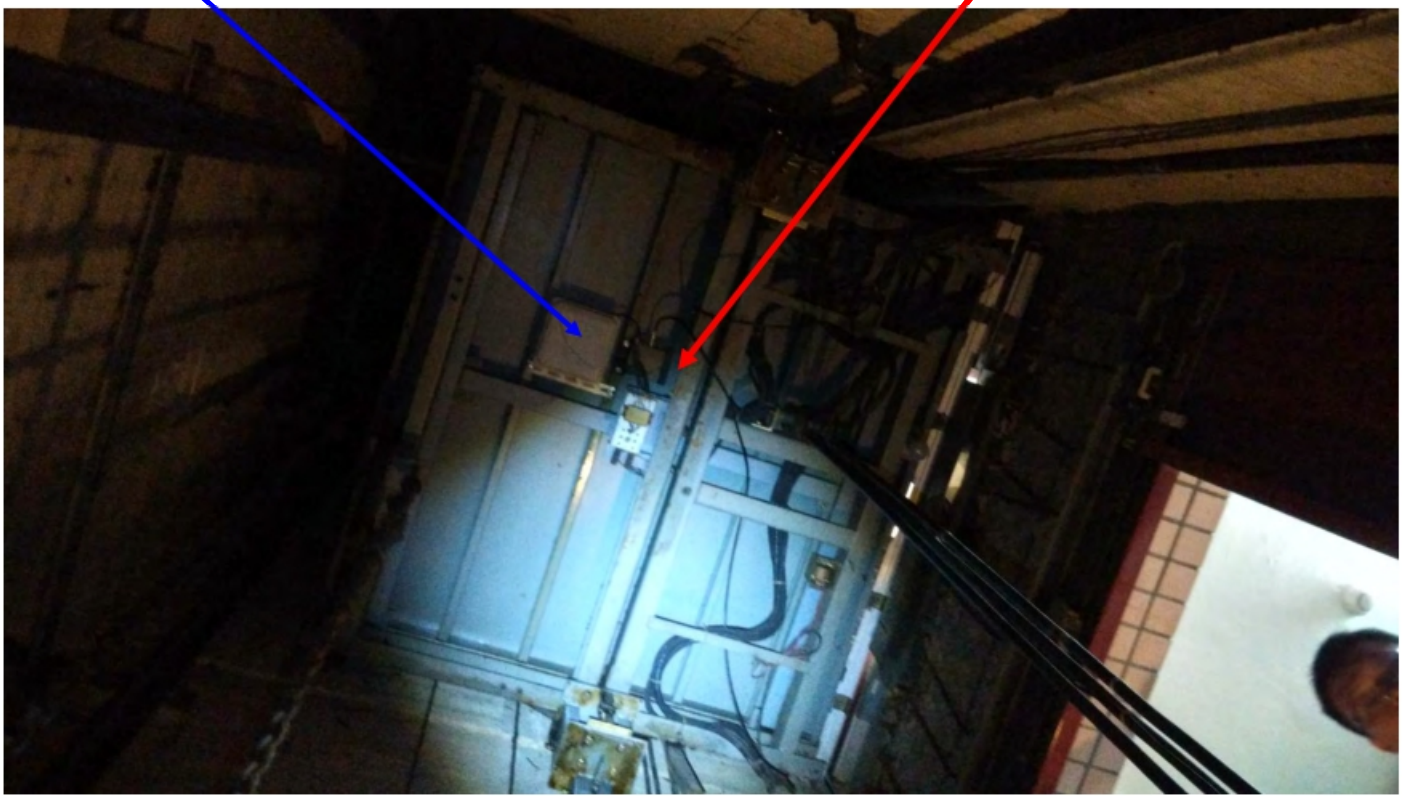

Wlan Installation Photo (The Building higher than the 45 floors)

Receiver parts

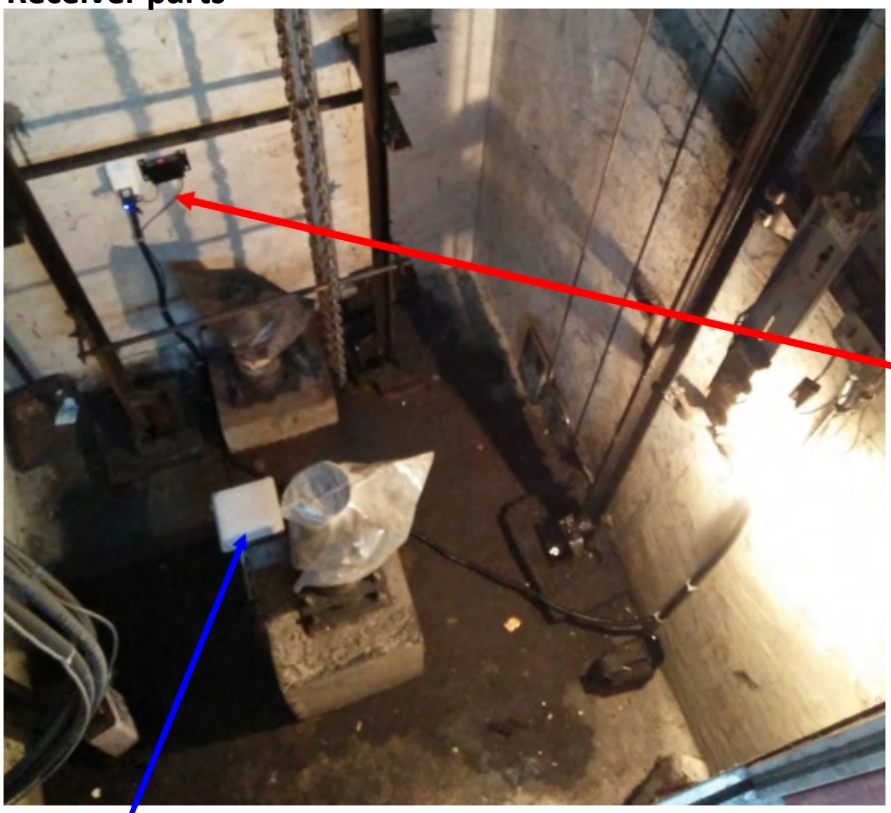

Receiver use 3m

ANTENNA

Transmitter use 30 cm

Transmitter parts

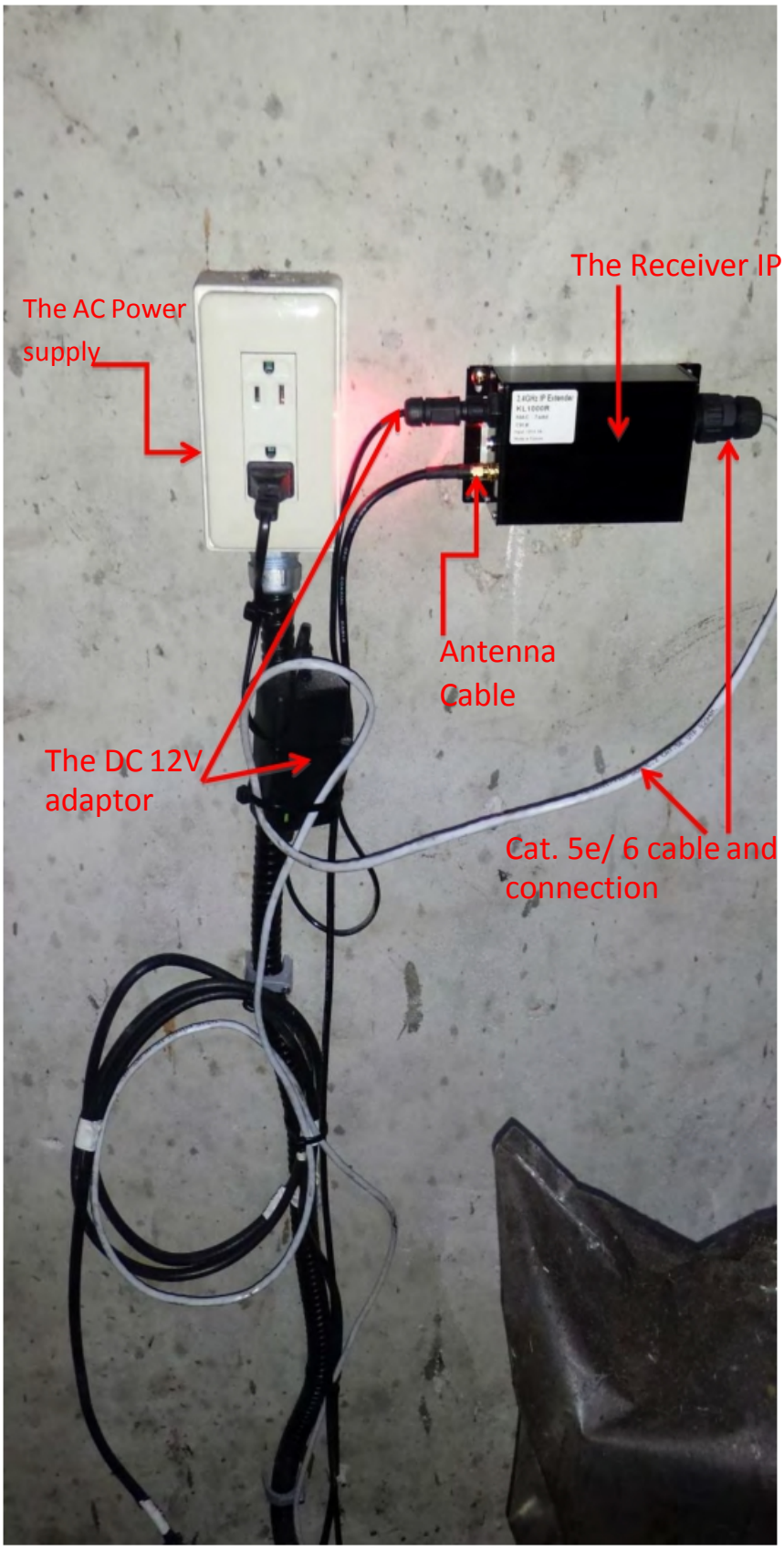

The Receiver IP Extender setup configuration

1. The receiver IP Extender box and receiving antenna are placed at the bottom of the elevator tunnel. The actual installation position is depends on the site environment.
2. The antenna devices must not interfere with the original wire of the elevator.
3. The transmitting antenna should be aligned with the receiving antenna, and should not deviate too far.

4.

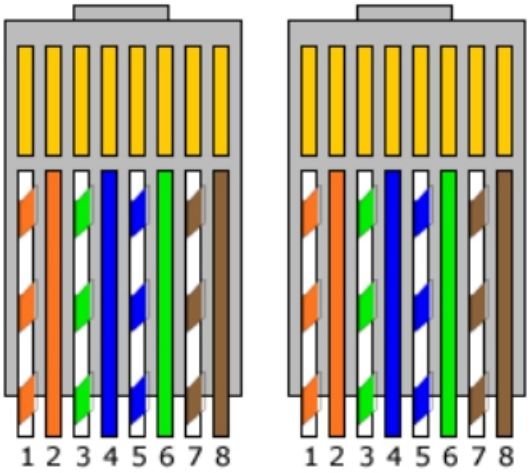

RJ45 network cable connector.

This device complies with part 15 of the FCC Rules. Operation is subject to the following two conditions: (1) this device may not cause harmful interference, and (2) this device must accept any interference received, including interference that may cause undesired operation.

FCC Compliance Statement

This device complies with Part 15 of the FCC Rules. Operation is subject to the following two conditions:
1. This device must not cause harmful interference, and
2. This device must be able to withstand any interference received, including interference that may cause undesired operation.

FCC Warning

This equipment has been tested and found to comply with the limits for a Class B digital device, pursuant to Part 15 of the FCC Rules. These limits are designed to provide reasonable protection against harmful interference in a residential installation. This equipment generates, uses and can radiate radio frequency energy and, if not installed and used in accordance with the instructions, may cause harmful interference to radio communications. However, there is no guarantee that interference will not occur in a particular installation. If this equipment does cause harmful interference to radio or television reception, which can be determined by turning the equipment off and on, the user is encouraged to try to correct the interference by one or more of the following measures:

• Reorienting or relocating the receiving antenna.
Increasing the distance between the equipment and the receiver.
• Connecting the equipment to a different outlet from that to which the receiver is connected.
• Consulting the dealer or an experienced technician for help.

Caution:

To comply with the limits for an FCC Class B computing device, always use the shielded signal cord supplied with this unit. The Federal Communications Commission warns that changes or modifications to the unit not expressly approved by the party responsible for compliance could invalidate the user's authority to operate the equipment.

FCC RF Radiation Exposure

This equipment complies with the FCC RF radiation exposure limits stipulated for an uncontrolled environment. This device and its antenna must not be co-located or operated in conjunction with any other antennas or transmitters. To comply with FCC RF exposure compliance requirements, the antenna used for this transmitter must be installed so as to provide a separation distance of at least 20 cm from all persons and must not be co-located or operated in conjunction with any other antennas or transmitters.

Professional installation instruction

Installation personal
This product is designed for specific application and needs to be installed by a qualified personal who has RF and related rule knowledge. The general user shall not attempt to install or change the setting.

Installation location
The product shall be installed at a location where the radiating antenna can be kept 40cm from nearby person in normal operation condition to meet regulatory RF exposure requirement.

External antenna
Use only the antennas which have been approved by the applicant. The non-approved antenna(s) may produce unwanted spurious or excessive RF transmitting power which may lead to the violation of FCC/IC limit and is prohibited.

Installation procedure
Please refer to user's manual for the detail.