User manual

Product Name: Bluetooth Headphones

Trade Name: dyplay

Model Name:Urban Traveller

Manufacture's Name: Beijing Qunlitiancheng Network Technology Co., Ltd.

Frequency:2402 – 2480 MHz

Package

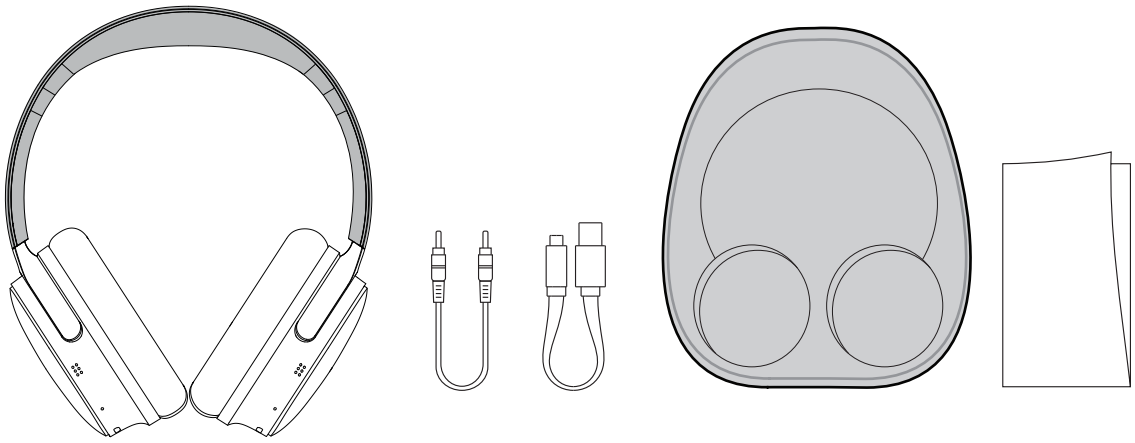

X1 X1 X1 X1 X1

dyplay

Diagram

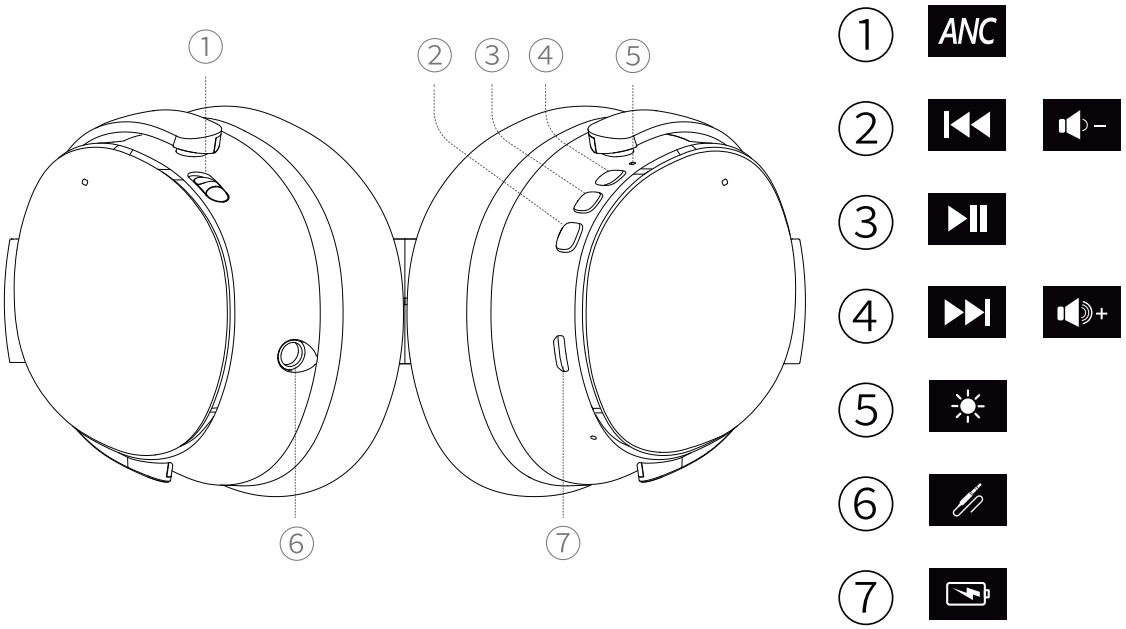

How to pair?

1.Long Press button for 5s to enter pairing mode with red and blue indicator flashing

2. Enable Bluetooth on your smart phone and search ‘dyplay urban traveller’ and click to connect

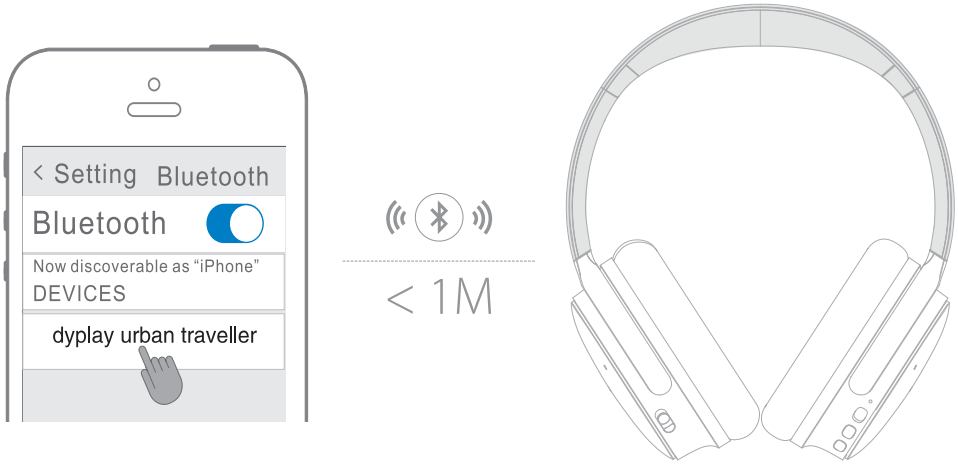

ANC Switch/Line Output

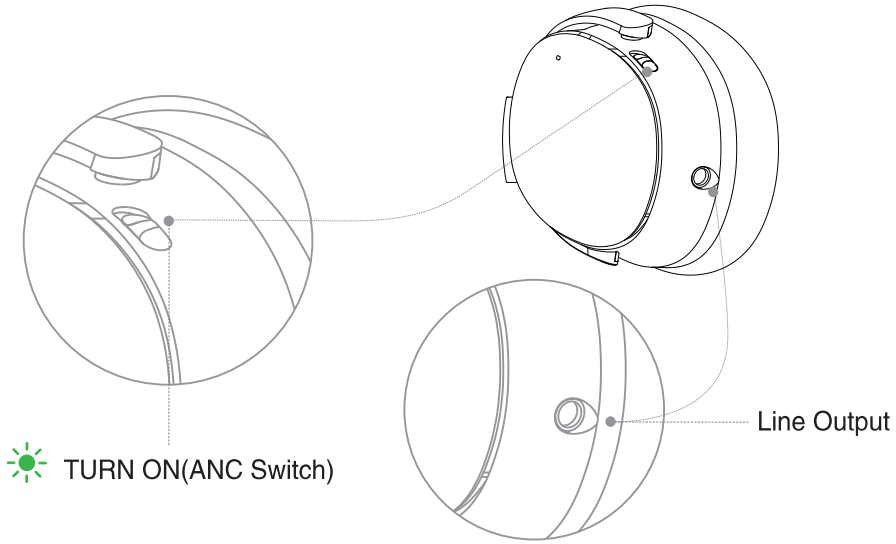

Attention:
ANC function can work even when the headphone power off

Power ON/OFF

Attention: Long Press button for 5s to enter pairing mode with red and blue indicator flashing

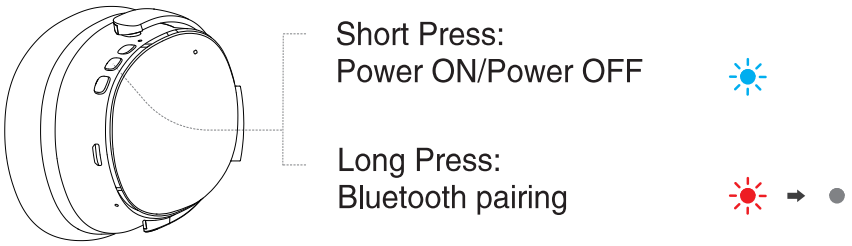

Play/Pause/Answer a Call/Hang up a Call/Reject a Call

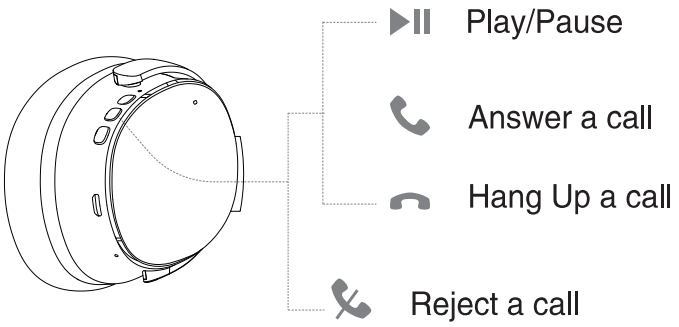

dyplay

Volume Control/Music Control

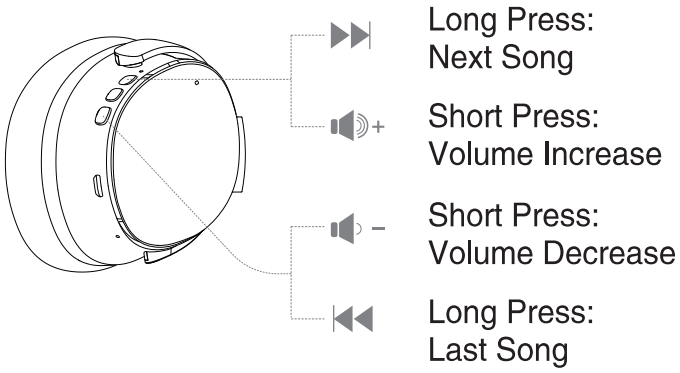

Charge Battery

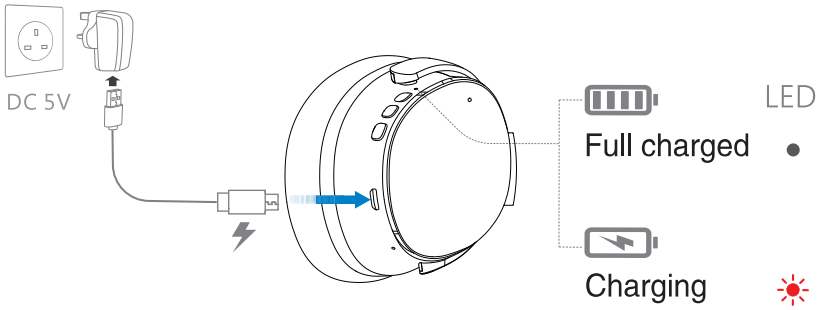

Fcc statement

Operation is subject to the following three conditions;

1. This device may not cause harmful interference.

2. This device must accept any interference received,including interference that may cause undesired operation.

3. This device has been evaluated to meet general RF exposure requirement.The device can be used in portable exposure condition without restriction.

Note

This equipment has been tested and found to comply with the limits for a Class B digital device,pursuant to part 15 of the FCC Rules.These limits are designed to provide reasonable protection against harmful interfe–rence in a residential installation. This equipment generates,uses and can radiate radio frequency energy and,if not installed and used in communications.However, there is no guarantee that interference will not occur in a particular installation.if this equipment does cause harmful interference to radio or television reception,which can be determined by turning the equipment off and on,the user is encou–raged to try to correct the interference by one or more of the following measures:

- Reorient or relo cate the receiving antenna.
- Increase the separation between the equipment and receiver.
- Connect the equipment into an outlet on a circuit different from that to which the receiver is connected.
- Consult the dealer or an experienced radio/TV technician for help.

Important Safety Instructions

- Please do not use this product with obvious damage.
- Do NOT use the headphones at a high volume for any extended period. To avoid hearing damage, use your headphones at a comfortable, moderate volume level.
- Use caution and follow applicable laws regarding mobile phone and headphone use if using the headphones for phone calls while driving. Do NOT use the headphones for any other purpose while driving.
- Contains small parts which may be a choking hazard. Not suitable for children under age 3.
- Please keep away from pacemakers or other magnetic goods which are susceptible to magnetic fields, especially medical supplies. This product contains magnetic material. Consult your physician on whether this might affect your implantable medical device.

- Do NOT use the headphones with noise canceling mode at any time the inability to hear surrounding sounds may present a danger to yourself or others, such as near traffic, construction site or railroad, etc.
- Do NOT immerse headphone in the water or expose it in wet inviroment for a long time.
- Remove headphones immediately if you experience a warming sensation or loss of audio.
- Removal of the rechargeable lithium ion battery in this product should be conducted only by a qualified professional.
- Please dispose of used batteries properly, following local regulations. Do not incinerate.

Other Statements

Use this product only with an agency approved power supply which meets local regulatory requirements.

Any use that not specified in the instructions is considered to be a misuse of the product; The product manufacturer does not bear any liability for losses caused by incorrect use or other man–made negligence.

Warranty Statement

The product manufacturer warrants your product against defects in materials and workmanship when purchased directly from the official store or authorized reseller. This warranty is extended only to the original end–use purchaser or the person receiving the product as a gift and shall not be extended to any other person or transferee. The warranty is valid from the date of retail purchase for a period of 1 year.

This warranty does not cover defects or damage arising from improper use or maintenance, normal wear and tear, commercial use, accident or external causes. Unauthorized repair, modification or customization of your product voids this warranty.

FCC Caution.

This device complies with part 15 of the FCC Rules. Operation is subject to the following two conditions:
(1) This device may not cause harmful interference, and
(2) this device must accept any interference received, including interference that may cause undesired operation.

Any Changes or modifications not expressly approved by the party responsible for compliance could void the user's authority to operate the equipment.

Note: This equipment has been tested and found to comply with the limits for a Class B digital device, pursuant to part 15 of the FCC Rules. These limits are designed to provide reasonable protection against harmful interference in a residential installation. This equipment generates uses and can radiate radio frequency energy and, if not installed and used in accordance with the instructions, may cause harmful interference to radio communications. However, there is no guarantee that interference will not occur in a particular installation. If this equipment does cause harmful interference to radio or television reception, which can be determined by turning the equipment off and on, the user is encouraged to try to correct the interference by one or more of the following measures:
-Reorient or relocate the receiving antenna.
-Increase the separation between the equipment and receiver.
-Connect the equipment into an outlet on a circuit different from that to which the receiver is connected.
-Consult the dealer or an experienced radio/TV technician for help.

The device has been evaluated to meet general RF exposure requirement. The device can be used in portable exposure condition without restriction.