DOPHIGO

DophiGo Indoor Chime

V1.0

Product Introduction

DophiGo indoor chime is a wireless indoor receiving ringing host which can be worked with DophiGo smart video doorbell.

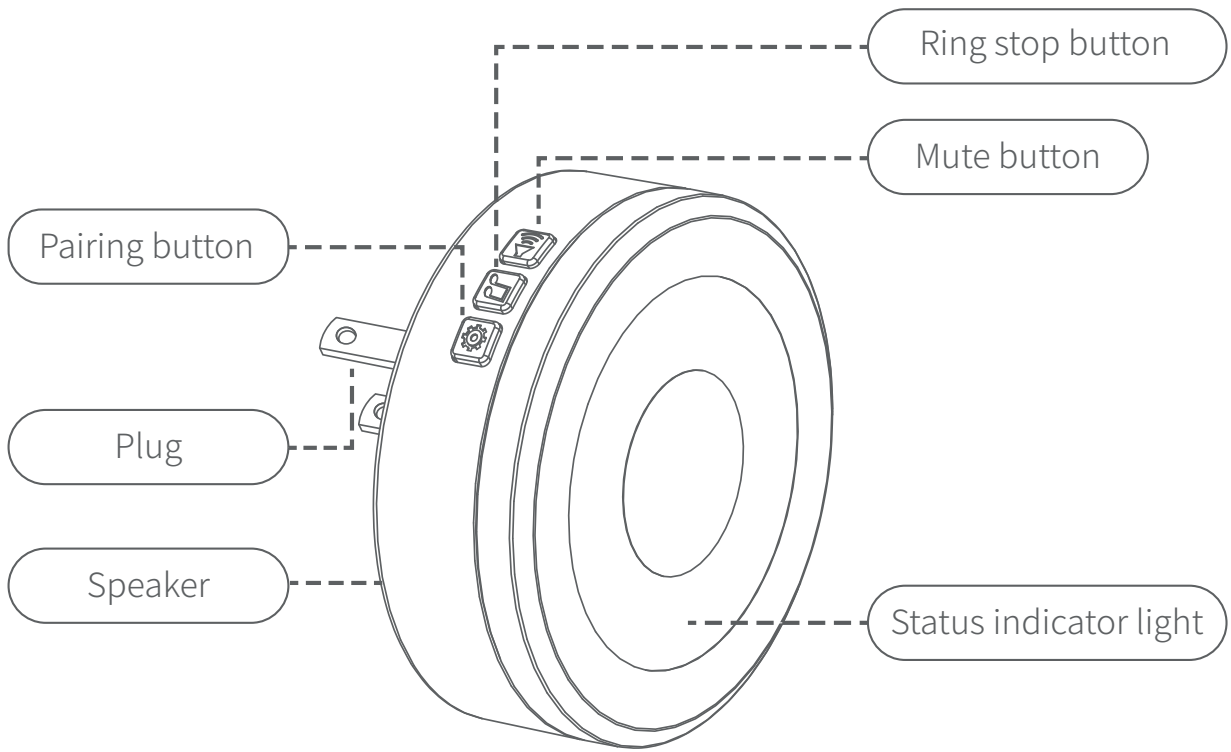

Button Introduction

Mute button
Press to enter/exit silent mode

Ring stop button
Short press to cancel the current ring

Pairing button
Short press to pair
Long press to reset

Package Contents

Please check product in good condition and good reception of full accessories.

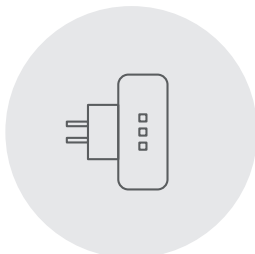

Indoor chime X1

User's Manual X1

Quick Matching Guide

When using the smart doorbell indoor chime to pair with DophiGo DPH-DV-200 outdoor unit, you can refer to the following steps to pair the device:

1. Turn on the chime and you can hear "Ding Dong" after the red light flashing.

2. Shortly press the pairing button on the chime, then the blue light flashing. And then push the call button of outdoor unit. The blue light will stay solid for 2 seconds after"Ding Dong" sound which means devices are paired succeed.

3. Pushing the call button of the outdoor unit after paired succeed, the chime will ring the "Ding Dong" sound with blue light flashing.

Indoor Chime Setting

The doorbell owner (who first connects the doorbell) can find the video doorbell in the device list when opening the DophiGo APP after the doorbell chime paired. Enter the device setting page to set chime ringtone and ringing volume.

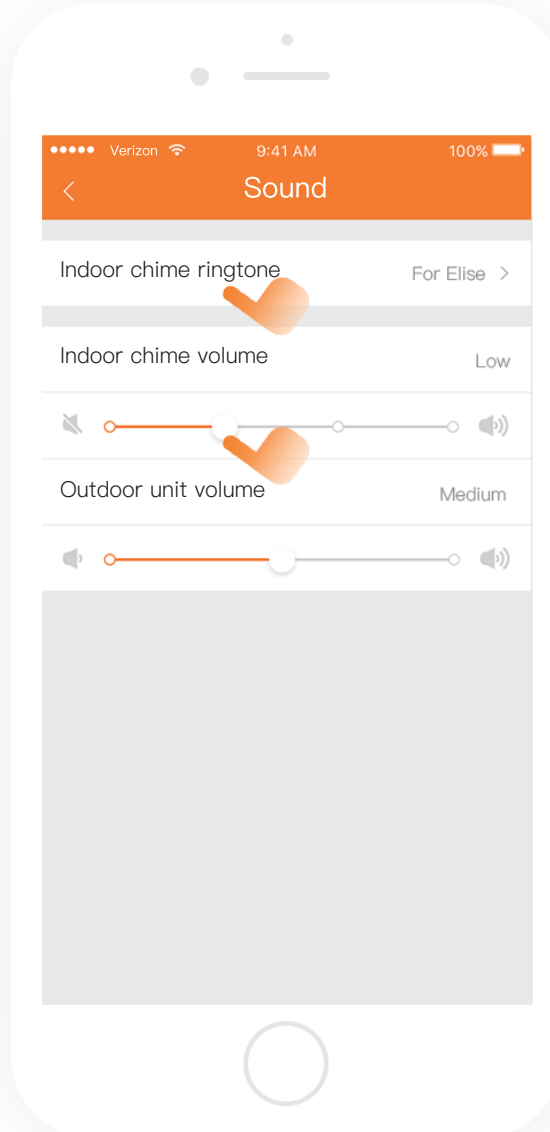

Customer Support

I.Warranty Policies

The doorbell warranty applies only to product failure due to non-human causes during the warranty period. It covers as below:

1.7 Days Return Policy

We offer a full refund or replacement upon receipt of the invoice if any quality problems are found within 7 days after purchase.

2.15 Days Replacement Policy

We offer replacement with a similar product due to quality problems found within 15 days after purchase.

3.1 year Manufacture's Warranties

We offer maintenance services on any product for quality problems found within 1 year after purchase.

II .Non-Warranty Policies

THESE WARRANTIES DO NOT APPLY TO:

1. Products with no warranty certificate sold by third parties, or products that exceed the valid warranty period.
2. Damages caused by improper usage, improper maintenance, or disassembly without DophiGo's authority.
3. Damages caused by force majeure.
4. Color fading and cosmetic wear during usage of the product.
5. Products with missing or unmatchable barcode.

Customer Service

Email / support@dophigo.com

Website / http://www.dophigo.com

Hotline / +86 755-29418680 (Workday 9:00~18:00)

amazon

For amazon users who needs technical support, please contact:

Email: amazon@dophigo.com

Hotline: +1 866-946-5206

Product Name

DophiGo Indoor Chime

Product Code

DPHDI200

Manufacturer

Shenzhen DophiGo IoT Technology Co., Ltd.

FCC Caution.

This device complies with part 15 of the FCC Rules. Operation is subject to the following two conditions:
(1) This device may not cause harmful interference, and
(2) this device must accept any interference received, including interference that may cause undesired operation.

Any Changes or modifications not expressly approved by the party responsible for compliance could void the user's authority to operate the equipment.

Note: This equipment has been tested and found to comply with the limits for a Class B digital device, pursuant to part 15 of the FCC Rules. These limits are designed to provide reasonable protection against harmful interference in a residential installation. This equipment generates uses and can radiate radio frequency energy and, if not installed and used in accordance with the instructions, may cause harmful interference to radio communications. However, there is no guarantee that interference will not occur in a particular installation. If this equipment does cause harmful interference to radio or television reception, which can be determined by turning the equipment off and on, the user is encouraged to try to correct the interference by one or more of the following measures:
-Reorient or relocate the receiving antenna.
-Increase the separation between the equipment and receiver.
-Connect the equipment into an outlet on a circuit different from that to which the receiver is connected.
-Consult the dealer or an experienced radio/TV technician for help.

.