NANO

INDOOR AIR QUALITY MONITOR

MANUAL OF USE INSTRUCTIONS

INDOOR AIR QUALITY
MONITORING DEVICE

PM2.5
28
µg/m³

THANK YOU FOR SELECTING air sns INDOOR AIR QUALITY MONITOR

Please carefully read this entire manual before operating your new product, in order to prevent accident.

Important Information

Caution: To prevent any accidents or damages to the product, please follow the instructions below.

- Do not operate the product or touch the power plug when hand is wet as you may get an electric shock.
- To prevent the product from short circuits or cause electric shocks, do not damp the product.
- Keep the product away from flammable substances or fire sources.
- Do not disassemble, repair or alter the product without authorization. Unauthorized disassembly or repair may cause failure and danger. Unauthorized alteration may result in fire or breakdown.
- Do not use alcohol or solvents to clean the product, it will damage the product or electric shocks leading to injuries or fire.
- If product is damaged (including product's main unit and power plug), do not continue to use. Damaged product must be replaced by manufacturer or authorized service provider only.
- Please operate under supervision.
- RF Power (EIRP): 15.5 dBm (2412 MHz - 2462 MHz)
- Working Temperature Range: 0°C - 40°C

Compliance

Model: NANO

Series: air sns

Product Name : Indoor Air Quality Monitor Device

Brand Name: DST Technology

FCC ID : 2ARGN-NANO

Made in China

FCC STATEMENTS

（1） Caution： Changes or modifications not expressly approved by the party responsible for compliance could void the user's authority to operate the equipment.

（2） NOTE:This equipment has been tested and found to comply with the limits for a Class B digital device, pursuant to part 15 of the FCC Rules. These limits are designed to provide reasonable protection against harmful interference in a residential installation. This equipment generates, uses ,and can radiate radio frequency energy and, if not installed and used in accordance with the instructions, may cause harmful interference to radio communications. However, there is no guarantee that interference will not occur in a particular installation. If this equipment does cause harmful interference to radio or television reception, which can be determined by turning the equipment off and on, the user is encouraged to try to correct the interference by one or more of the following measures:

- Reorient or relocate the receiving antenna.
- Increase the separation between the equipment and receiver.
- Connect the equipment into an outlet on a circuit different from that to which the receiver is connected.
- Consult the dealer or an experienced radio/ TV technician for help.

This equipment complies with FCC radiation exposure limits set forth for an uncontrolled environment. This equipment should be installed and operated with minimum distance 20cm between the radiator & your body.

❗ This equipment has been tested and declare that product have fully complied with Directive 2014/53/EU key requirement.

Overview

NANO air quality monitoring device can monitor Fine Particulate Matter ($PM_{2.5}$), Carbon Dioxide (CO_2), Total Volatile Organic Compounds (TVOC), Formaldehyde (HCHO), Humidity (RH), Temperature (Temp). Monitored data help to evaluate indoor environment, smart-control building ventilation and air filtering system.

Packing List

NANO	1
Mounting Backplane	1
Placement Bracket	1
Power Adapter	1
Expansion Bolt Set M4 x30	2
Ethernet Cable	1
Pin (Use for Network Setting)	1
User Manual	1

Front

SN	Description
1	Fish Eye Power LED
2	RJ45 Status LED
3	RS485 Status LED
4	Wi-Fi Status LED
5	Sensor Reading and Unit Display

Rear

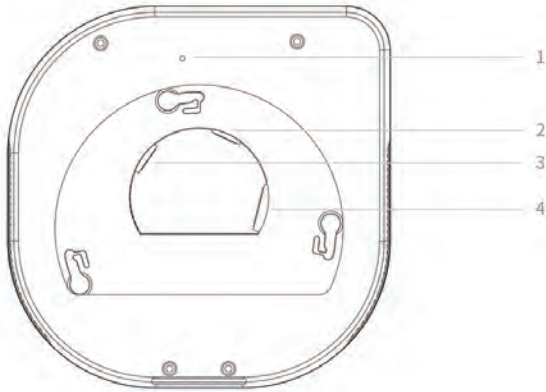

SN	Description
1	Wi-Fi Configuration Button
2	DC24V Power Connection
3	RS485 Port
4	RJ45 Port

Wi-Fi Configuration Network

1 . Configuration Preparation

Use pin to press Wi-Fi configuration button for at least 6 seconds to reset the Wi-Fi setting.

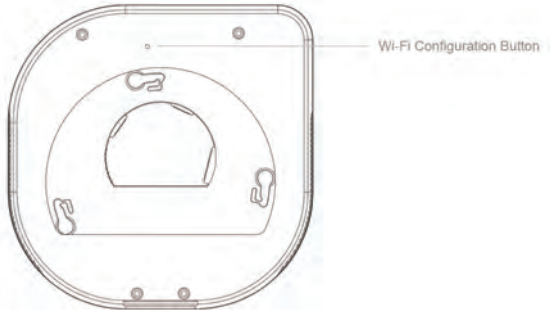

* Note: To avoid unknown error, do not turn off power during configuration.

2 . Wi-Fi Hotspot Connection

1 . For personal computer or laptop, click on Wi-Fi setting and connect to Wi-Fi for NANO_XXXXXX.

2 . Open Internet browser, enter the IP address 10.10.10.1 in the address bar, and then you will see the configuration interface for Wi-Fi.

As shown in the screenshot:

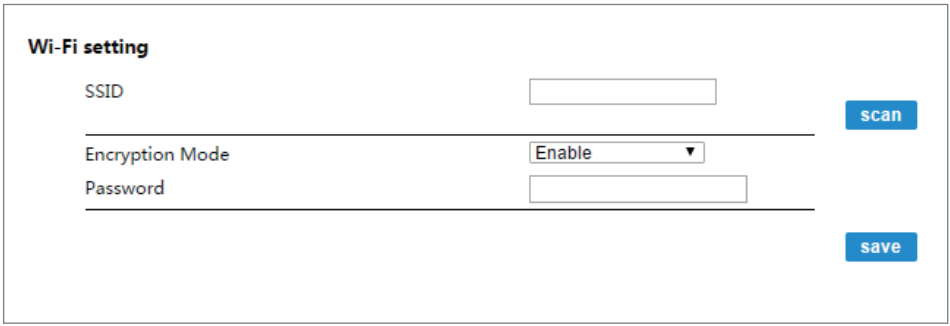

- Click on SCAN to search for Wi-Fi SSID and select your Wi-Fi, or manually enter the Wi-Fi SSID.
- Enter Wi-Fi encryption information and click to SAVE your setting. Device will restart to complete the Wi-Fi configuration.
- If the three lights on the panel light lit up, it indicates that Wi-Fi has been successfully connected.

Modbus Connection

Plug RS485 cable into NANO's RS485 Port to complete the hardware connection of Modbus.

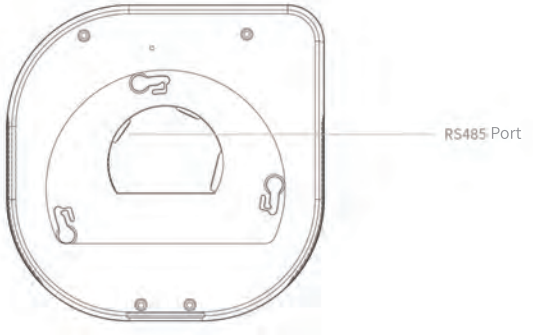

Ethernet Connection

1 . Connection Preparation

Plug ethernet cable into the RJ45 Port. Please make sure the other end of the Ethernet cable is connected to your computer.

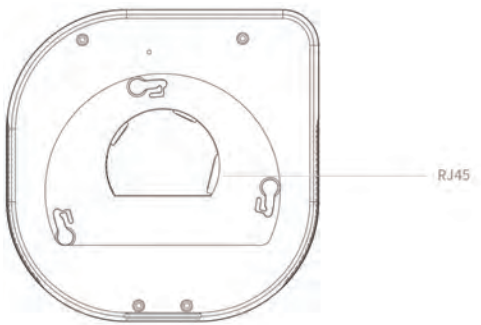

2 . Ethernet Configuration

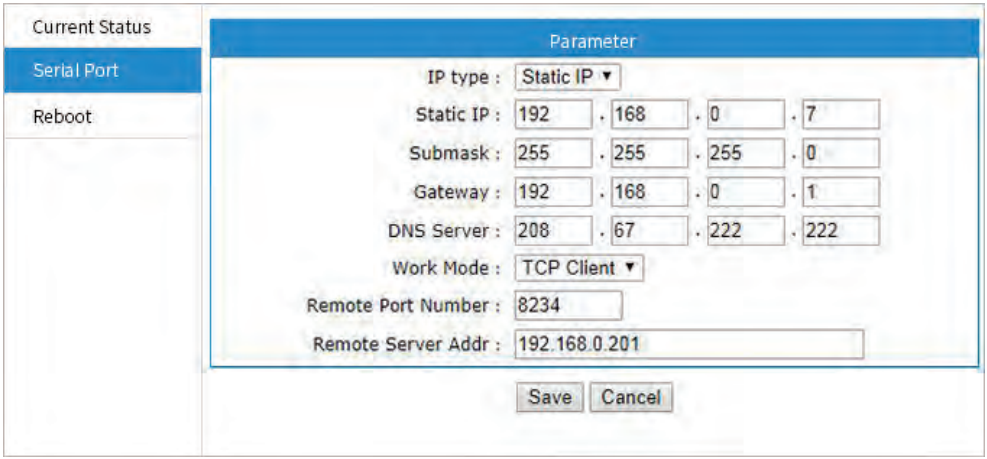

1 . Please input 192.168.0.7 in your browser. The default admin and password is “admin”. Then you can enter configuration page.

2 . Select TCP/UDP protocol according to the actual application.

3 . NANO local address setting, DHCP is automatically acquired by default. Under special circumstances use static IP address, enter network management address and subnet mask.

Note

1. If you have a DNS server, enter the server address.
2. By default. the target domain or server IP address points to the air sns cloud. Under special circumstances, manually enter the address or domain name and port number according to the requirements of the project.

Installation

Methed One:

1 . Installation of Wall Mount Bracket

Place the wall mount bracket to the wall, use the screws provided in the packaging (Please be reminded where electrical/Ethernet cables run, if they are embedded in the wall)

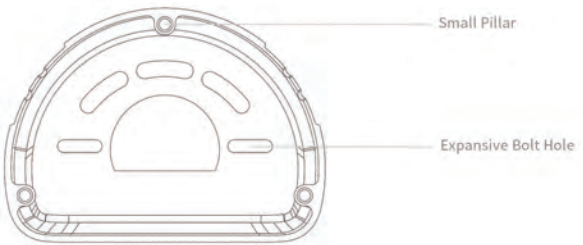

2 . Connect the power adapter to the device.

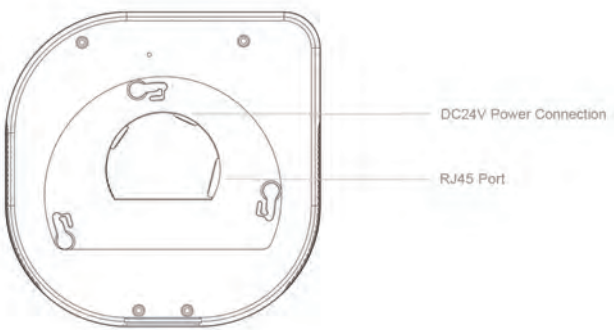

3 . Nano unit Installation

Please place the main unit onto the small pillar of wall mount bracket, turn it clockwise until it locks.

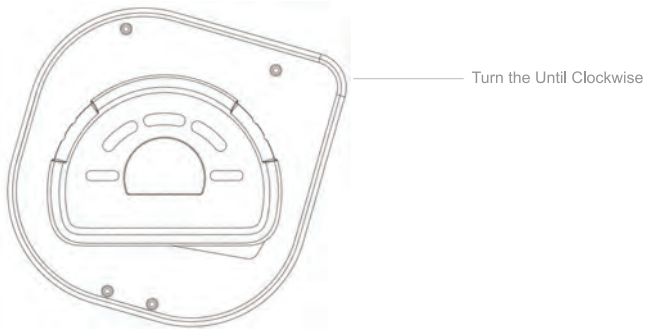

Methed Two:

Please place the main unit onto the small pillar of placement bracket, turn it clockwise until it locks, Please put the device in the right place.

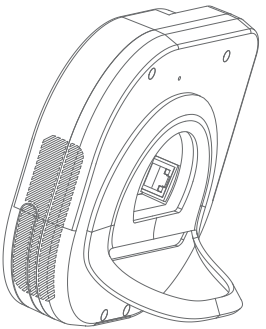

Important information

- The accuracy of NANO sensor may be affected by extreme operating conditions.
- Do not use NANO in highly polluted environment. Otherwise, its sensitivity, accuracy and service life will be seriously affected.
- The sensors and chips used in this device are precision components. In order to prevent the interference of the components, please prevent the unit from being exposed to harsh environment.
- Please prevent NANO from excessive exposure to perfume and alcohol.
- NANO should be placed far away from vents, cooking equipment and humidifiers.
- Under normal circumstances, warm up may take up to 30 minutes.

Specification

Material	PC Polycarbonate
Color	White
Connection	Wi-Fi (2.4 Ghz. 802.11 b/g/n) RS485/RJ45 (Modbus or DST Protocol)
Working Voltage	DC 24 V
Working Current	200 mA
Working Temperature	0 - 45 °C
Working Humidity	20 - 80 % (Non Condensation)
TVOC Measurement Principle	MEMS Metal Oxide Sensor Technology
TVOC Measurement Range	125 - 2000 ppb
$PM_{2.5}$ Measurement Principle	Laser Light Scattering (OPC)
$PM_{2.5}$ Measurement Range	0 - 500 µg/m³

CO_2 Measurement Principle	Non Dispersive Infrared Method
CO_2 Measurement Range	400 - 2000 ppm
HCHO Measurement Principle	Electrochemistry
HCHO Measurement Range	0 - 5 ppm
Temperature Measurement Range	0 - 45 °C
Humidity Measurement Range	20 - 85 %
Size	153×153×36 mm 153×153×50 mm (Include Mount Bracket)
Net Weight	370 g 400 g (Include Mount Bracket)

Environment

Product contains harmful substance, enlisted below.

	Harmful Substances					
Parts	Pb	Hg	Cd	Cr (VI)	PBB	PBDE
PCBA & components	o	o	o	o	o	o
Shell	o	o	o	o	o	o
Other Accessories	o	o	o	o	o	o

This form was compiled according to SJ/T11364

o means the content of the harmful substance in all homogeneous materials of component is below the limit specified in GB/T26572.

x means the content of the harmful substance is within the content of homogeneous material of the component exceeding the limit specified in GB/T26572.

Please make contribution to environmental protection. When the life of the indoor air quality testing equipment has been exhausted, do not treat it as regular garbage and send it to the garbage collection point.

FAQ

SN	Question	Answer
1	Network failure	Please use mobile phones or other devices and try to connect to the Wi-Fi to determine whether the network is working well.
		If the network isn't working stable please reconfigure the network.
2	No data uploaded to the cloud	Please reconfigure the network.

Warranty Service

1 . Warranty regulations

1 . Within 7 days from the purchase of the product (according to invoice), the product can be refunded or replaced due to quality reasons;

2 . Within 1 years from the purchase of the product (according to invoice), the product can apply for maintenance due to quality reasons.

2 . Not under warranty

1 . Failure to use and maintain the product in accordance with the instructions,resulting in product failure or damage;

2 . The warranty period has expired;

3 . Damage caused by accidental or human factors.

Maintenance Record

Maintenance Record	Record 1	Record 2
Repair Date		
Returned Date		
Malfunction Cause		
Original SN No.		
New SN No.		
Send to Repair Condition		
Repairment Condition		
Maintenance Signature		

Certification: _____

Quality Check: _____

Date of Manufacture: _____

air sns

SENSING NETWORK SERVICE

感 知 网 络 服 务

上海迪勤智能科技有限公司

Shanghai DST Technology Co.,Ltd.

地址:静安区江场路 1313 号 17 楼

Address: 17F 1313 JIANGCHANG Lu,Jing'An

电话:021 6610 9780

网址:http://www.airsns.cn