FCC Part 15.407

DYNAMIC FREQUENCY SELECTION

TEST REPORT

For

Align Technology Inc.

2820 Orchard Parkway San Jose, CA 95134 United States

FCC ID: 2ARGX-WIFIM

Report Type:	**Product Type:**
Original Report	WiFi Module

Report Producer : **Himiko Chen**

Report Number : **RLK1810002-00C**

Report Date : **2019-03-18**

Reviewed By: **Jerry Chang**

Prepared By: Bay Area Compliance Laboratories Corp.(Taiwan)
70, Lane 169, Sec. 2, Datong Road, Xizhi Dist.,
New Taipei City 22183, Taiwan, R.O.C.
Tel: +886 (2) 2647 6898
Fax: +886 (2) 2647 6895
www.bacl.com.tw

Note: This test report is prepared for the customer shown above and for the device described herein. It may not be duplicated or used in part without prior written consent from Bay Area Compliance Laboratories Corp. (Taiwan) The determination of the test results does not require consideration of the uncertainty of the measurement, unless the assessment is required by customer agreement, regulation or standard document specification.

Revision History

Revision	Report Number	Issue Date	Description	Author/ Revised by
1.0	RLK1810002-00C	2019-03-18	Original Report	Himiko Chen

TABLE OF CONTENTS

1 General Information 4

1.1 Product Description for Equipment under Test (EUT) 4
1.2 Objective 4
1.3 Test Methodology 5
1.4 Test Facility 5

2 System Test Configuration 6

2.1 Description of Test Configuration 6
2.2 EUT Exercise Software 6
2.3 Support Equipment List and Details 6

3 Summary of Test Results 7

4 Test Equipment List and Details 8

5 APPLICABLE STANDARDS 9

5.1 DFS Requirement 9
5.2 DFS Measurement System 13
5.3 System Block Diagram 13
5.4 Test Procedure 15

6 TEST RESULT 16

6.1 Description of EUT 16
6.2 Channel Loading 16

The sample is use method (C) 16

6.3 Conducted Test Setup Configuration 17
6.4 Cablibration of DFS Detection Threshold Level 17
6.5 Environmental Conditions 17

7 Channel Move Time and Channel Closing Transmission Time 19

7.1 Test Procedure 19
7.2 Test Results 19

8 NON-OCCUPANCY PERIOD 24

8.1 Test Procedure 24
8.2 Test Result 24

9 TEST SETUP PHOTOGRAPHS 26

1 General Information

1.1 Product Description for Equipment under Test (EUT)

Applicant	Align Technology Inc. 2820 Orchard Parkway San Jose, CA 95134 United States
Manufacturer	AsiaRF Co., Ltd. 1F, 7, Houde Street, Younghe District, New Taipei City, 23455, Taiwan
Brand(Trade) Name	align
Product (Equipment)	WiFi Module
Main Model Name	WifiM
Antenna Specification	PCB Antenna / 6.5 dBi
Power Operation (Voltage Range)	☐ AC 120V/60Hz ☐ Adapter I/P: 100-240Vac,1.2A ; O/P: 12Vdc, 3A ☐ By AC Power Cord ☐ PoE
	☐ DC Type ☐ Battery ☐ DC Power Supply ☐ External from USB Cable ☐ External DC Adapter
	☒ Host System
Received Date	Oct. 09, 2018
Date of Test	Feb. 09, 2019 ~ Mar. 18, 2019

**All measurement and test data in this report was gathered from production sample serial number: 1810002 (Assigned by BACL, Taiwan).*

1.2 Objective

This report is prepared on behalf of Align Technology Inc. in accordance with Part 2, Subpart J, Part 15, Subparts A, B and E of the Federal Communication Commission's rules.

The tests were performed in order to determine compliance with FCC Part 15.407(h)(2) Radar Detection Function of Dynamic Frequency Selection (DFS).

1.3 Test Methodology

FCC CFR 47 Part2, Part15.407 (h)

FCC KDB 905462 D02 UNII DFS Compliance Procedures New Rules v02

FCC KDB 905462 D03 UNII Clients without Radar Detection New Rules v01r02

1.4 Test Facility

The Test site used by Bay Area Compliance Laboratories Corp. (Taiwan) to collect test data is located on

☒70, Lane 169, Sec. 2, Datong Road, Xizhi Dist., New Taipei City 22183, Taiwan, R.O.C.

☐68-3, Lane 169, Sec. 2, Datong Road, Xizhi Dist., New Taipei City 22183, Taiwan, R.O.C.

Bay Area Compliance Laboratories Corp. (Taiwan) Lab is accredited to ISO 17025 by Taiwan Accreditation Foundation (TAF code: 3180) and the FCC designation No.TW3180 under the Mutual Recognition Agreement (MRA) in FCC Test. The facility also complies with the radiated and AC line conducted test site criteria set forth in ANSI C63.10.

The Federal Communications Commission has the reports on file and is listed under FCC Registration No.: 974454. The test site has been approved by the FCC for public use and is listed in the FCC Public Access Link (PAL) database.

2 System Test Configuration

2.1 Description of Test Configuration

The EUT was configured for testing in a normal mode which was provided by the manufacturer.

2.2 EUT Exercise Software

The software Rev: MEDIATEK 7615 , Linux version : 4.14.0

2.3 Support Equipment List and Details

Manufacturer	Description	Model	Serial Number
L.T.E	Adapter	LTE65ES-S2-1	174702842
DELL	NB	E6410	10912240367
DELL	Control PC	OPTIPLEX 7020	13853681714
NETGEAR	AP Router	R7800	4H72675800870

Master device FCC ID: PY315100319

3 Summary of Test Results

A compliant test report to FCC 15.407 shall be sufficient to show compliance of a transmitter or receiver with the requirement of this standard.

The following result table represents the list of measurements required under the CFR §47 Part 15.407(h), and KDB: 905462 D02 UNII DFS Compliance Procedures New Rules v02

Items	Description of Test	Results
Detection Bandwidth	UNII Detection Bandwidth	Not applicable
Performance Requirements Check	Initial Channel Availability Check Time (CAC)	Not applicable
	Radar Burst at the Beginning of the CAC	Not applicable
	Radar Burst at the End of the CAC	Not applicable
In-Service Monitoring	Channel Move Time	Compliant
	Channel Closing Transmission Time	Compliant
	Non-Occupancy Period	Compliant
Radar Detection	Statistical Performance Check	Not applicable

Note:

Not applicable: the EUT is a client unit without radar detection

4 Test Equipment List and Details

Description	Manufacturer	Model	Serial Number	Calibration Date	Calibration Due Date
Spectrum Analyzer	Rohde & Schwarz	FSV40	101140	2018/11/22	2019/11/21
Vector Signal Generator	Rohde & Schwarz	SMBV100A	261748	2018/11/22	2019/11/21
Cable	WOKEN	SFL402	S02-160323-07	2018/02/12	2019/02/11
Cable	WOKEN	SFL402	S02-160323-07	2019/02/11	2020/02/10
Attenuator	MINI-CIRCUITS	BW-S10W5+	N/A	2018/03/08	2019/03/07
Attenuator	MINI-CIRCUITS	BW-S10W5+	N/A	2019/03/07	2020/03/06
Power Splitter	Mini-Circuits	ZFRSC-183-S+	SF448201614S	2018/03/29	2019/03/28
Power Divider	WOKEN	0120A04056002D	160201	2019/01/04	2020/01/03

***Statement of Traceability:** BACL Corp. attests that all of the calibrations on the equipment items listed above were traceable to the SI System of Units via the R.O.C. Center for Measurement Standards of the Electronics Testing Center, Taiwan (ETC) or to another internationally recognized National Metrology Institute (NMI), and were compliant with the current Taiwan Accreditation Foundation (TAF) requirements*

5 APPLICABLE STANDARDS

5.1 DFS Requirement

CFR §47 Part 15.407(h),

FCC KDB 905462 D02 UNII DFS Compliance Procedures New Rules v02

Table 1: Applicability of DFS Requirements Prior to Use of a Channel

Requirement	Operational Mode		
	Master	Client Without Radar Detection	Client With Radar Detection
Non-Occupancy Period	Yes	Not required	Yes
DFS Detection Threshold	Yes	Not required	Yes
Channel Availability Check Time	Yes	Not required	Not required
U-NII Detection Bandwidth	Yes	Not required	Yes

Table 2: Applicability of DFS requirements during normal operation

Requirement	Operational Mode	
	Master Device or Client with Radar Detection	Client Without Radar Detection
DFS Detection Threshold	Yes	Not required
Channel Closing Transmission Time	Yes	Yes
Channel Move Time	Yes	Yes
U-NII Detection Bandwidth	Yes	Not required

Additional requirements for devices with multiple bandwidth modes	Master Device or Client with Radar Detection	Client Without Radar Detection
U-NII Detection Bandwidth and Statistical Performance Check	All BW modes must be tested	Not required
Channel Move Time and Channel Closing Transmission Time	Test using widest BW mode available	Test using the widest BW mode available for the link
All other tests	Any single BW mode	Not required
Note: Frequencies selected for statistical performance check (Section 7.8.4) should include several frequencies within the radar detection bandwidth and frequencies near the edge of the radar detection bandwidth. For 802.11 devices it is suggested to select frequencies in each of the bonded 20 MHz channels and the channel center frequency.		

Table 3: DFS Detection Thresholds for Master Devices and Client Devices With Radar Detection

Maximum Transmit Power	**Value (See Notes 1, 2, and 3)**
EIRP ≥ 200 milliwatt	-64 dBm
EIRP < 200 milliwatt and power spectral density < 10 dBm/MHz	-62 dBm
EIRP < 200 milliwatt that do not meet the power spectral density requirement	-64 dBm
Note 1: This is the level at the input of the receiver assuming a 0 dBi receive antenna. **Note 2:** Throughout these test procedures an additional 1 dB has been added to the amplitude of the test transmission waveforms to account for variations in measurement equipment. This will ensure that the test signal is at or above the detection threshold level to trigger a DFS response. **Note3:** EIRP is based on the highest antenna gain. For MIMO devices refer to KDB Publication 662911 D01.	

Table 4: DFS Response Requirement Values

Parameter	**Value**
Non-occupancy period	Minimum 30 minutes
Channel Availability Check Time	60 seconds
Channel Move Time	10 seconds See Note 1.
Channel Closing Transmission Time	200 milliseconds + an aggregate of 60 milliseconds over remaining 10 second period. See Notes 1 and 2.
U-NII Detection Bandwidth	Minimum 100% of the U-NII 99% transmission power bandwidth. See Note 3.
Note 1: *Channel Move Time* and the *Channel Closing Transmission Time* should be performed with Radar Type 0. The measurement timing begins at the end of the Radar Type 0 burst. **Note 2:** The *Channel Closing Transmission Time* is comprised of 200 milliseconds starting at the beginning of the *Channel Move Time* plus any additional intermittent control signals required to facilitate a *Channel* move (an aggregate of 60 milliseconds) during the remainder of the 10 second period. The aggregate duration of control signals will not count quiet periods in between transmissions. **Note 3:** During the *U-NII Detection Bandwidth* detection test, radar type 0 should be used. For each frequency step the minimum percentage of detection is 90 percent. Measurements are performed with no data traffic.	

Table 5 – Short Pulse Radar Test Waveforms

Radar Type	Pulse Width (µsec)	PRI (µsec)	Number of Pulses	Minimum Percentage of Successful Detection	Minimum Number of Trials
0	1	1428	18	See Note 1	See Note 1
1	1	Test A: 15 unique PRI values randomly selected from the list of 23 PRI values in Table 5a	$\text{Roundup}\left\{\left(\frac{1}{360}\right)\cdot\left(\frac{19\cdot 10^6}{\text{PRI}_{\mu\text{sec}}}\right)\right\}$	60%	30
		Test B: 15 unique PRI values randomly selected within the range of 518-3066 µsec, with a minimum increment of 1 µsec, excluding PRI values selected in Test A			
2	1-5	150-230	23-29	60%	30
3	6-10	200-500	16-18	60%	30
4	11-20	200-500	12-16	60%	30
Aggregate (Radar Types 1-4)				80%	120
Note 1: Short Pulse Radar Type 0 should be used for the detection bandwidth test, channel move time, and channel closing time tests.					

A minimum of 30 unique waveforms are required for each of the Short Pulse Radar Types 2 through 4. If more than 30 waveforms are used for Short Pulse Radar Types 2 through 4, then each additional waveform must also be unique and not repeated from the previous waveforms. If more than 30 waveforms are used for Short Pulse Radar Type 1, then each additional waveform is generated with Test B and must also be unique and not repeated from the previous waveforms in Tests A or B.

For example if in Short Pulse Radar Type 1 Test B a PRI of 3066 usec is selected, the number of pulses would be $\text{Roundup}\left\{\left(\frac{1}{360}\right)\cdot\left(\frac{19\cdot 10^6}{3066}\right)\right\} = \text{Roundup}\{17.2\} = 18.$

Table 5a - Pulse Repetition Intervals Values for Test A

Pulse Repetition Frequency Number	Pulse Repetition Frequency (Pulses Per Second)	Pulse Repetition Interval (Microseconds)
1	1930.5	518
2	1858.7	538
3	1792.1	558
4	1730.1	578
5	1672.2	598
6	1618.1	618
7	1567.4	638
8	1519.8	658
9	1474.9	678
10	1432.7	698
11	1392.8	718
12	1355	738
13	1319.3	758
14	1285.3	778
15	1253.1	798
16	1222.5	818
17	1193.3	838
18	1165.6	858
19	1139	878
20	1113.6	898
21	1089.3	918
22	1066.1	938
23	326.2	3066

The aggregate is the average of the percentage of successful detections of Short Pulse Radar Types 1-4. For example, the following table indicates how to compute the aggregate of percentage of successful detections.

Radar Type	Number of Trials	Number of Successful Detections	Minimum Percentage of Successful Detection
1	35	29	82.9%
2	30	18	60%
3	30	27	90%
4	50	44	88%
Aggregate (82.9% + 60% + 90% + 88%)/4 = 80.2%			

Table 6 – Long Pulse Radar Test Waveform

Radar Type	Pulse Width (µsec)	Chirp Width (MHz)	PRI (µsec)	Number of Pulses per *Burst*	Number of *Bursts*	Minimum Percentage of Successful Detection	Minimum Number of Trials
5	50-100	5-20	1000-2000	1-3	8-20	80%	30

Table 7 – Frequency Hopping Radar Test Waveform

Radar Type	Pulse Width (µsec)	PRI (µsec)	Pulses per Hop	Hopping Rate (kHz)	Hopping Sequence Length (msec)	Minimum Percentage of Successful Detection	Minimum Number of Trials
6	1	333	9	0.333	300	70%	30

5.2 DFS Measurement System

BACL DFS measurement system consists of two subsystems: (1) The radar signal generating subsystem and (2) the traffic monitoring subsystem.

5.3 System Block Diagram

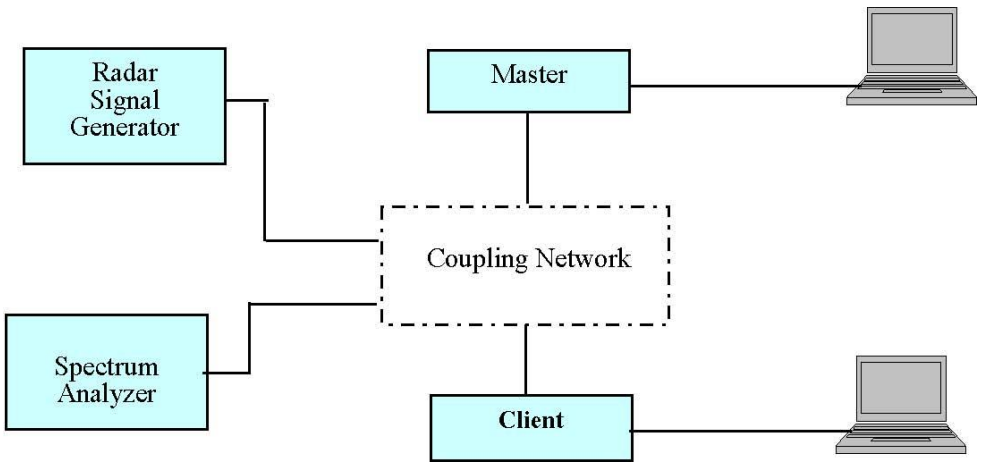

Conducted Method

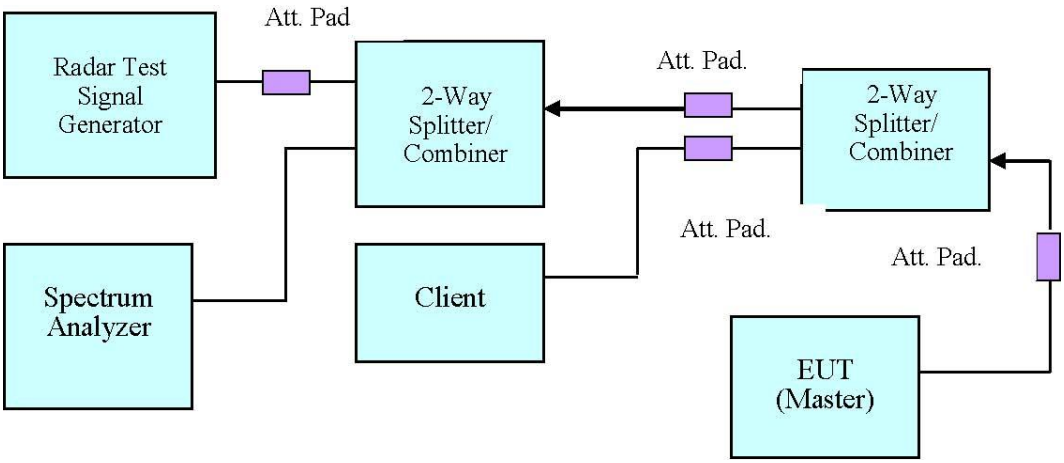

Setup for Master with injection at the Master

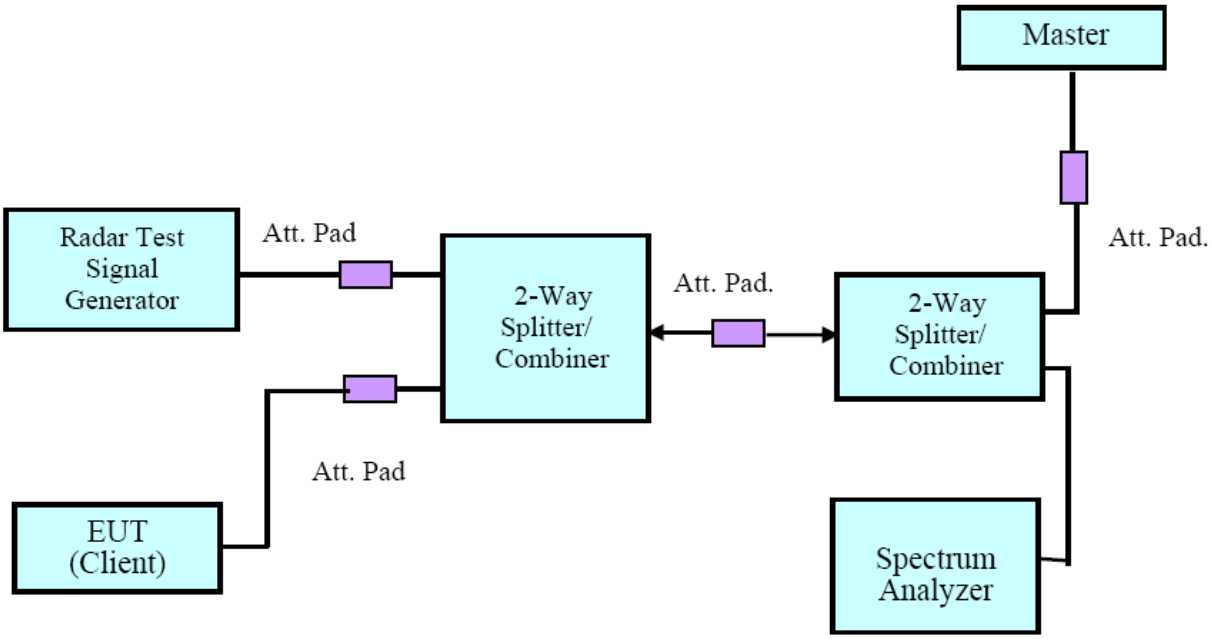

Setup for Client with injection at the Master

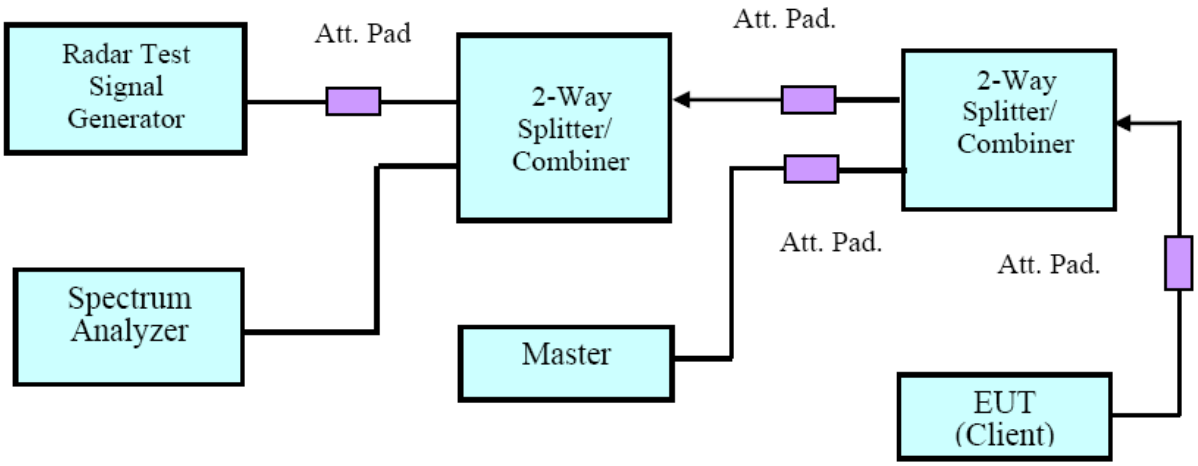

Setup for Client with injection at the Client

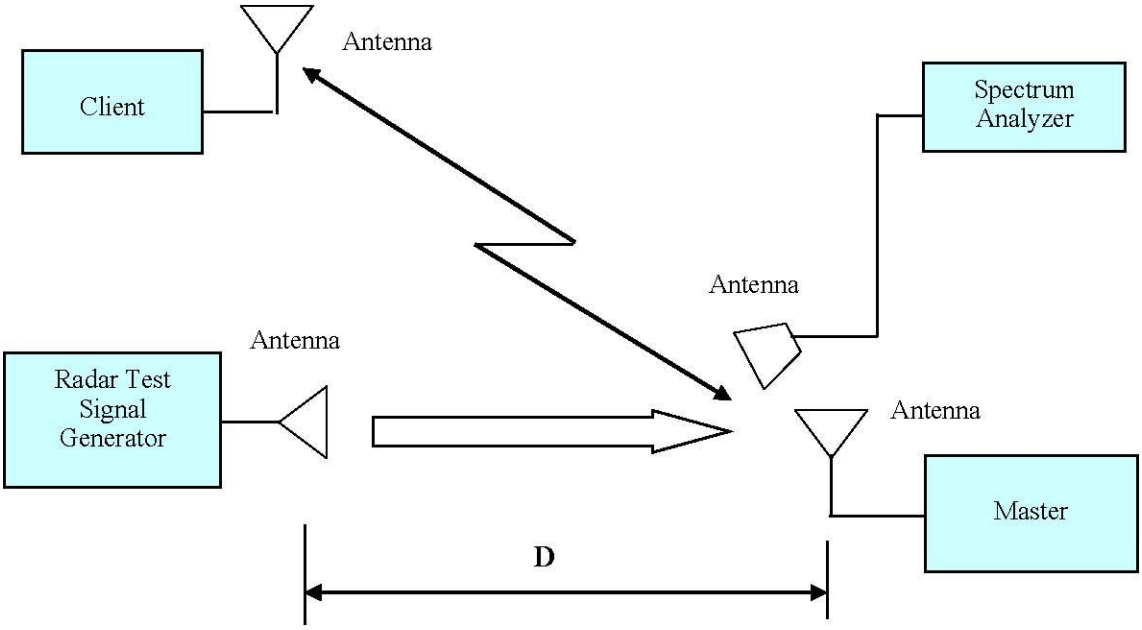

5.4 Test Procedure

A spectrum analyzer is used as a monitor verifies that the EUT status including Channel Closing Transmission Time and Channel Move Time, and does not transmit on a Channel during the Non-Occupancy Period after the diction and Channel move. It is also used to monitor EUT transmissions during the Channel Availability Check Time.

6 TEST RESULT

6.1 Description of EUT

The EUT operates in 5250-5350 MHz and 5470-5725 MHz range.

The rated output power of master device is >23 dBm (EIRP), therefore the required interference threshold level is -64 dBm, the required radiated threshold at antenna port is -64dBm.

Throughout these test procedures an additional 1 dB has been added to the amplitude of the test transmission waveforms to account for variations in measurement equipment. This will ensure that the test signal is at or above the detection threshold level to trigger a DFS response.

The calibrated radiated DFS detection threshold level is set to -64+1+(Master antenna gain:) =

Band 2 : -64+1.11+1= -61.89 dBm.
Band 3 : -64+1.61+1= -61.39 dBm

6.2 Channel Loading

System testing will be performed with channel-loading using means appropriate to the data types that are used by the unlicensed device. The following requirements apply:
a) The data file must be of a type that is typical for the device (i.e., MPEG-2, MPEG-4, WAV, MP3, MP4, AVI, etc.) and must generally be transmitting in a streaming mode.
b) Software to ping the client is permitted to simulate data transfer but must have random ping intervals.
c) Timing plots are required with calculations demonstrating a minimum channel loading of approximately 17% or greater. For example, channel loading can be estimated by setting the spectrum analyzer for zero span and approximate the Time On/ (Time On + Off Time). This can be done with any appropriate channel BW and modulation type.
d) Unicast or Multicast protocols are preferable but other protocols may be used. The appropriate protocol used must be described in the test procedures.

The sample is use method (C)

WLAN traffic is generated by streaming the video file TestFile.mpg, this file is used by IP and Frame based systems for loading the test channel during the In-service compliance testing of the U-NII device. The file is streamed from the Access Point to the Client in full motion video mode using the media player with the V2.61 Codec package.

6.3 Conducted Test Setup Configuration

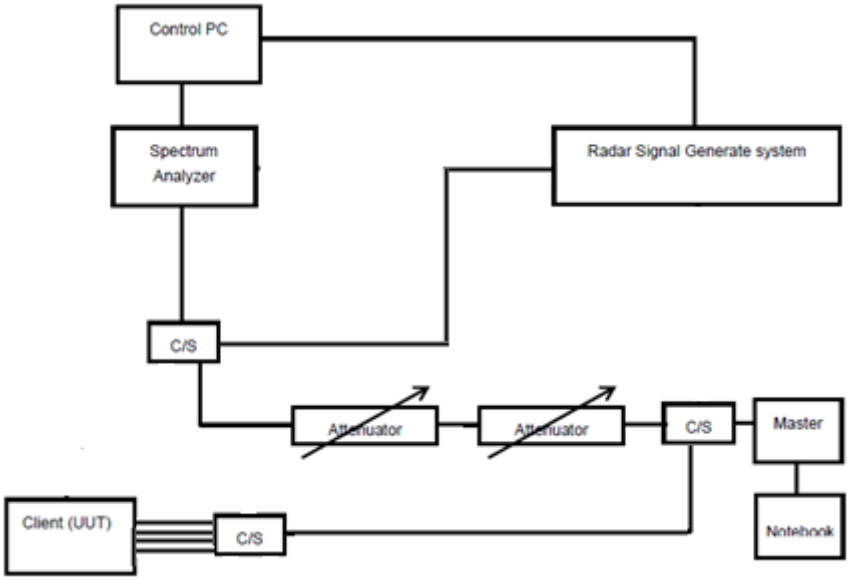

6.4 Cablibration of DFS Detection Threshold Level

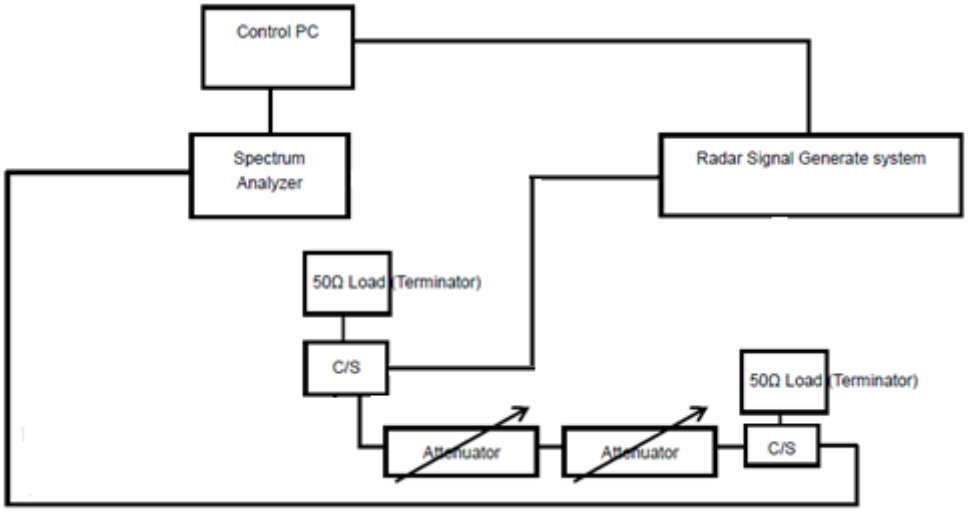

6.5 Environmental Conditions

Temperature:	25 ℃
Relative Humidity:	55 %
ATM Pressure:	1010 hPa

The testing was performed by Tom Hsu from 2019-02-09 to 2019-03-18.

Plots of Radar Waveforms

5290 MHz:

Radar Type 0

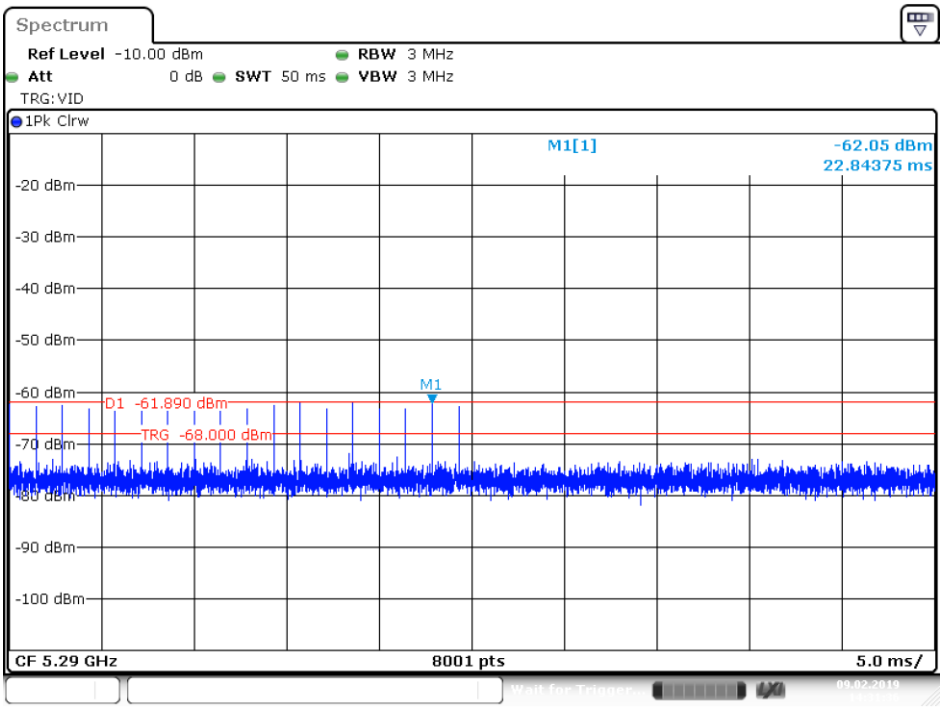

Date: 9.FEB.2019 14:31:36

5530 MHz:

Radar Type 0

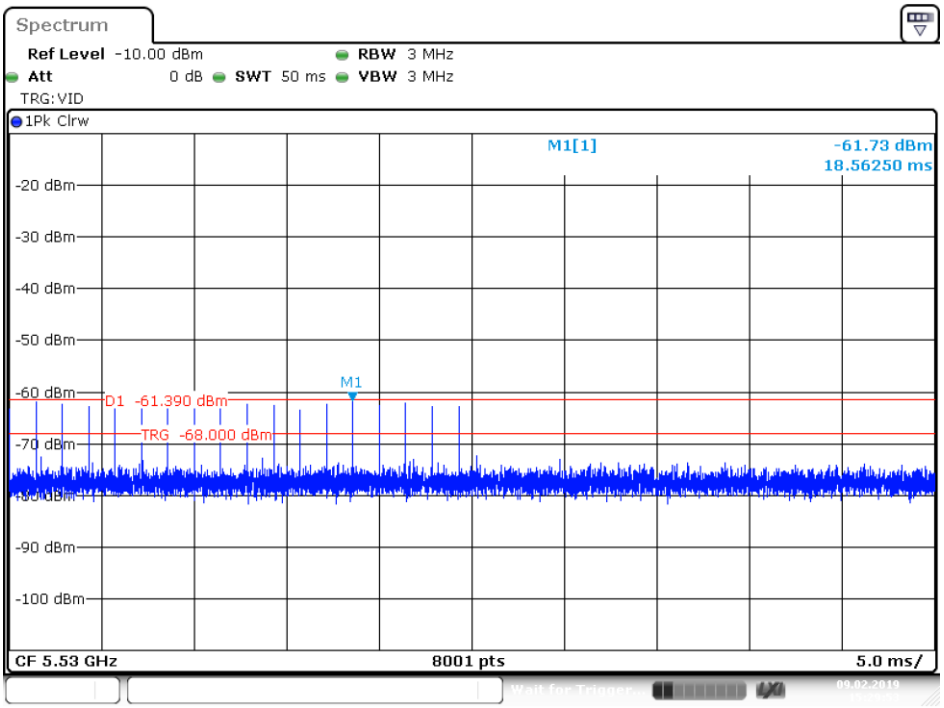

Date: 9.FEB.2019 15:29:53

7 Channel Move Time and Channel Closing Transmission Time

7.1 Test Procedure

Perform type 0 short pulse radar waveform. The aggregate channel closing transmission time is calculated as follows:

Aggregate Transmission Time = N*Dwell Time

N is the number of spectrum analyzer bins showing a device transmission Dwell Time is the dwell time per bin (i.e. Dwell Time = S/B, S is the sweep time and B is the number of bin, i.e. 10000)

7.2 Test Results

Frequency (MHz)	Bandwidth (MHz)	Radar Type	Results
5290	80	Type 0	Compliant
5530	80	Type 0	Compliant

Please refer to the following tables and plots.

5290 MHz

Type 0 radar channel move time result:

Item	Time (s)	Limit (s)
Channel move time	5.3475	10

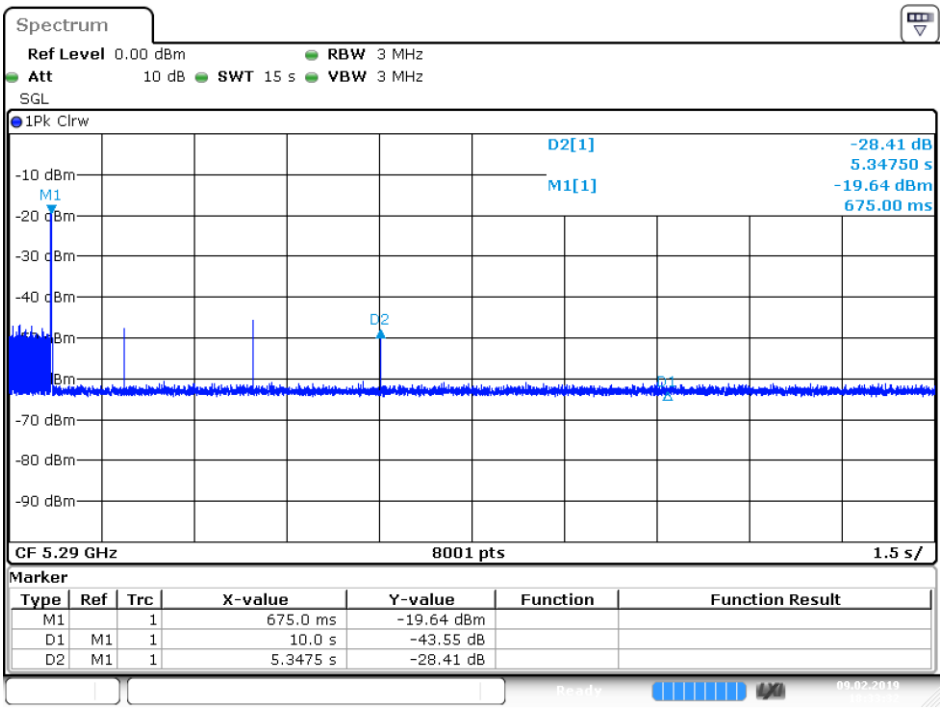

Date: 9.FEB.2019 18:33:32

Type0 radar channel closing transmission time result:

Item	Time (ms)	Limit (ms)
Closing Transmission Time	7.50	60

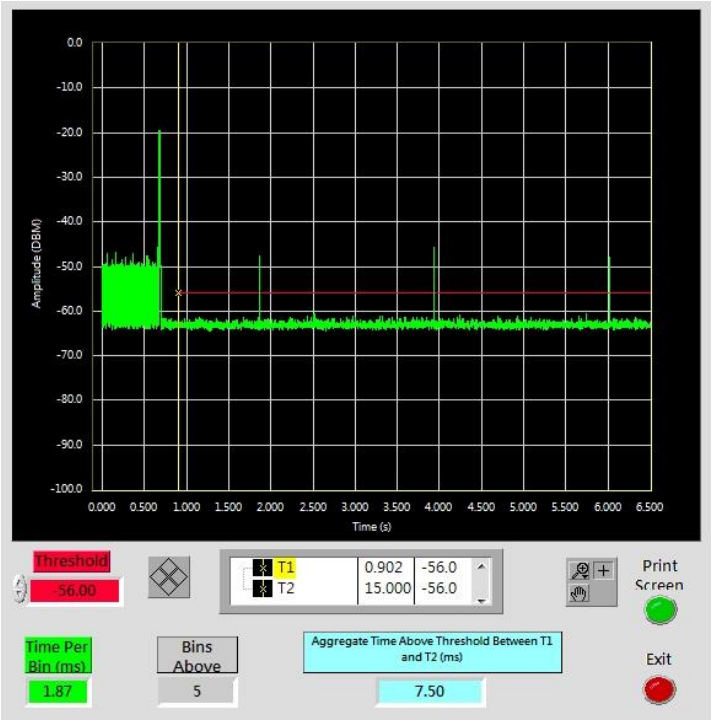

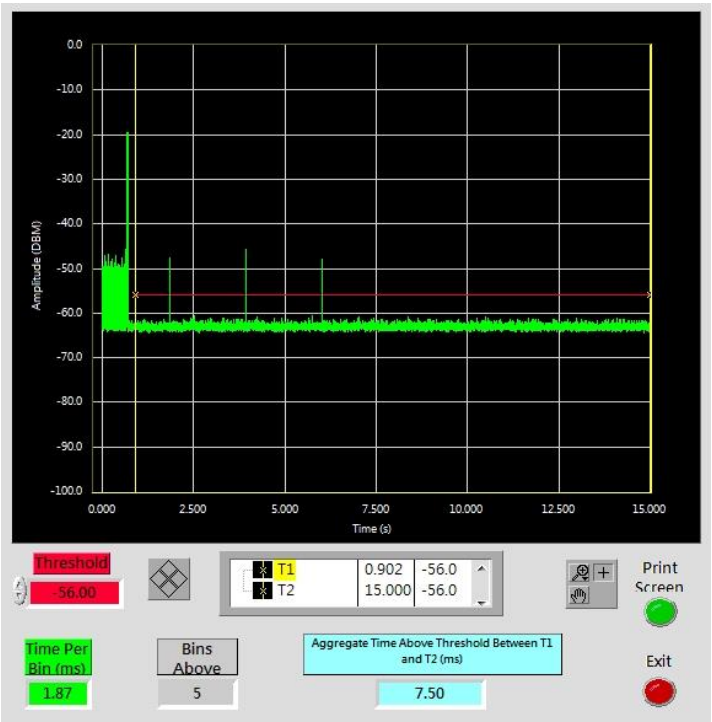

5530 MHz

Type 0 radar channel move time result:

Item	Time (s)	Limit (s)
Channel move time	0.496	10

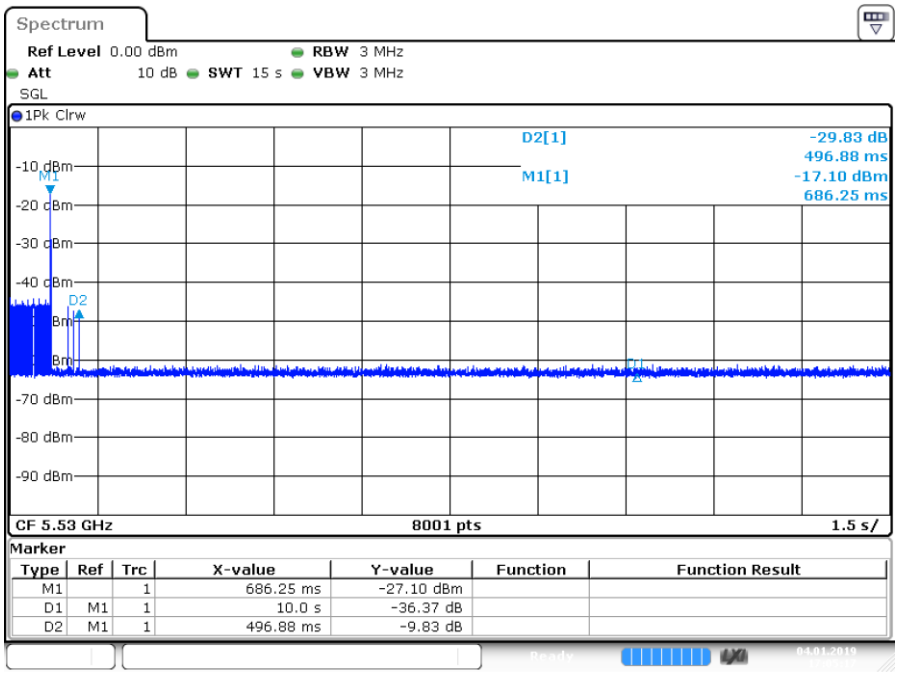

Date: 21.FEB.2019 17:05:18

Type0 radar channel closing transmission time result:

Item	Time (ms)	Limit (ms)
Closing Transmission Time	7.50	60

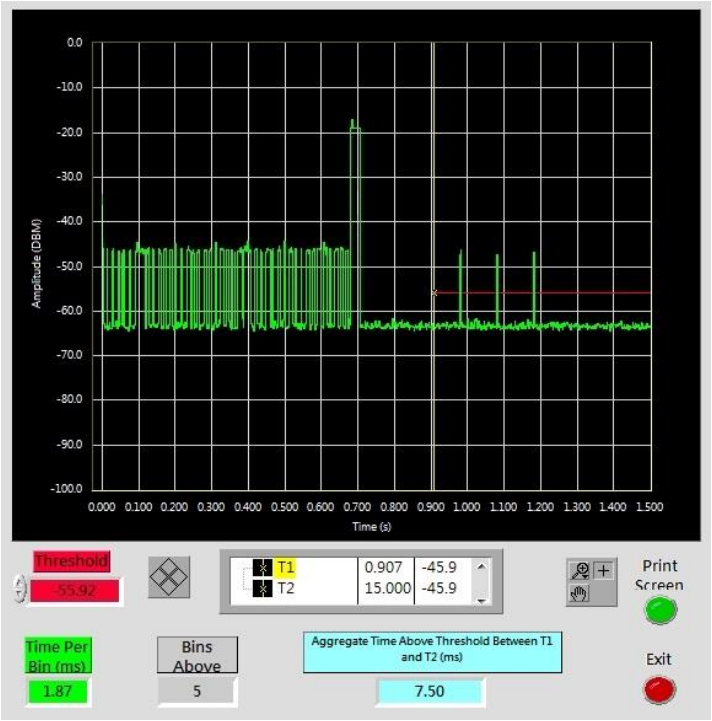

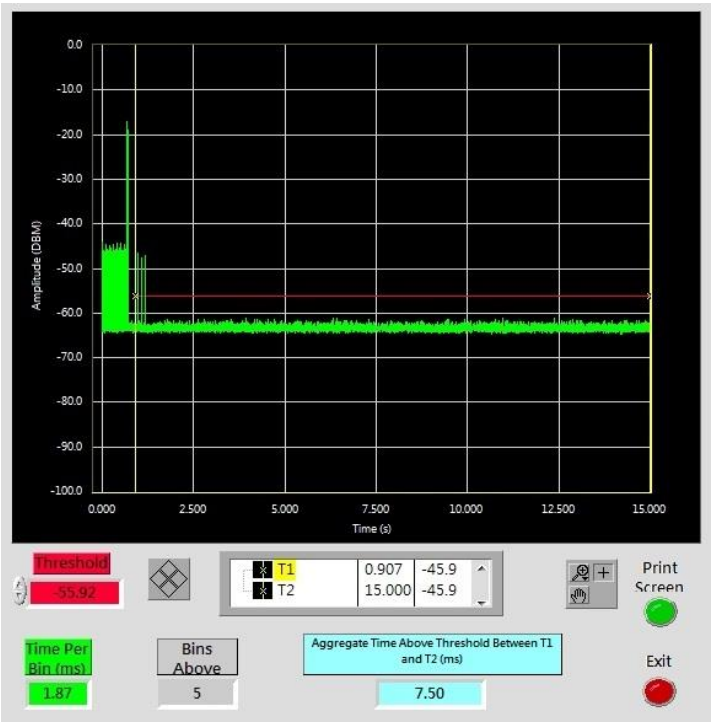

8 NON-OCCUPANCY PERIOD

8.1 Test Procedure

Measure the EUT for more than 30 minutes following the channel close/move time to very that the EUT does not resume any transmissions on this channel. Provide one plot to demonstrate no transmission on the channel for the non-occupancy period (30 minutes observation time)

8.2 Test Result

Frequency(MHz)	Bandwidth (MHz)	Spectrum Analyzer Display
5290	80	No transmission within 30 minutes
5530	80	No transmission within 30 minutes

Please refer to the following plots.

5290 MHz

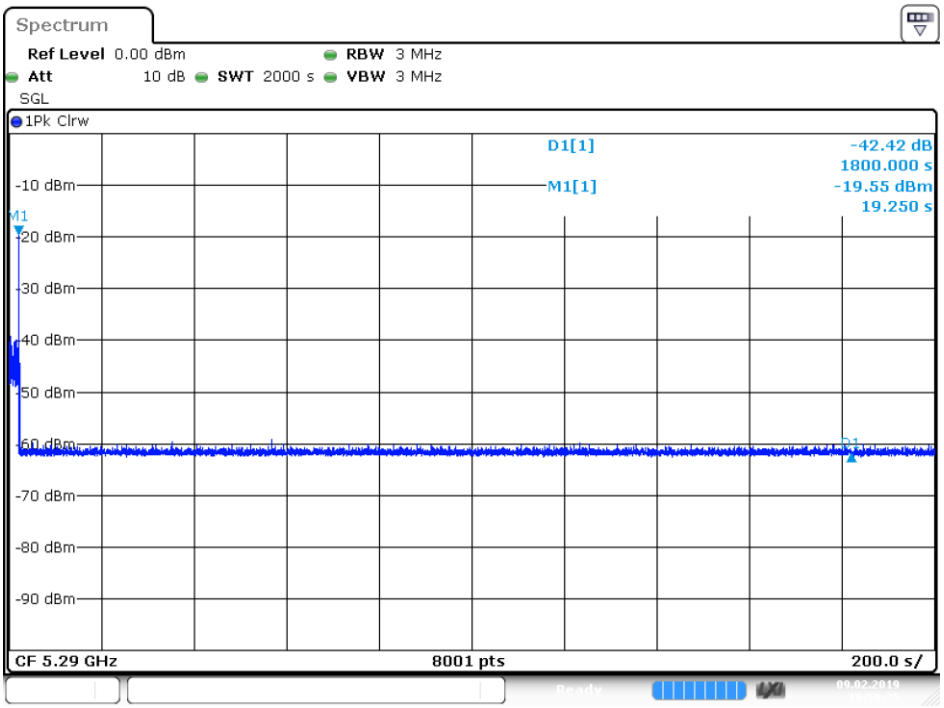

Date: 9.FEB.2019 19:58:36

5530 MHz

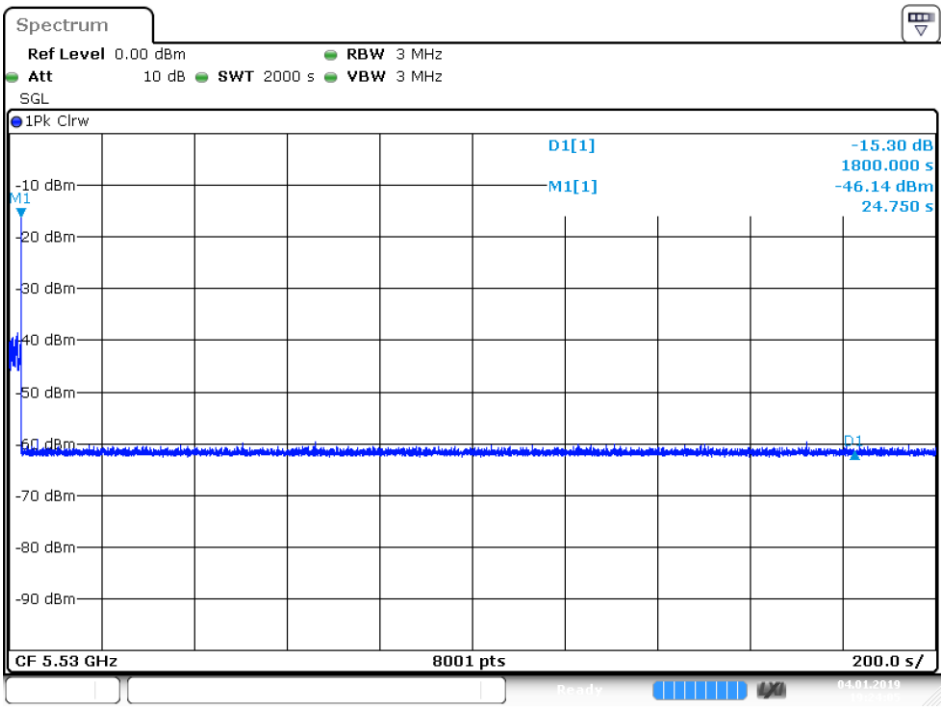

Date: 21.FEB.2019 19:24:05

9 Test Setup Photographs

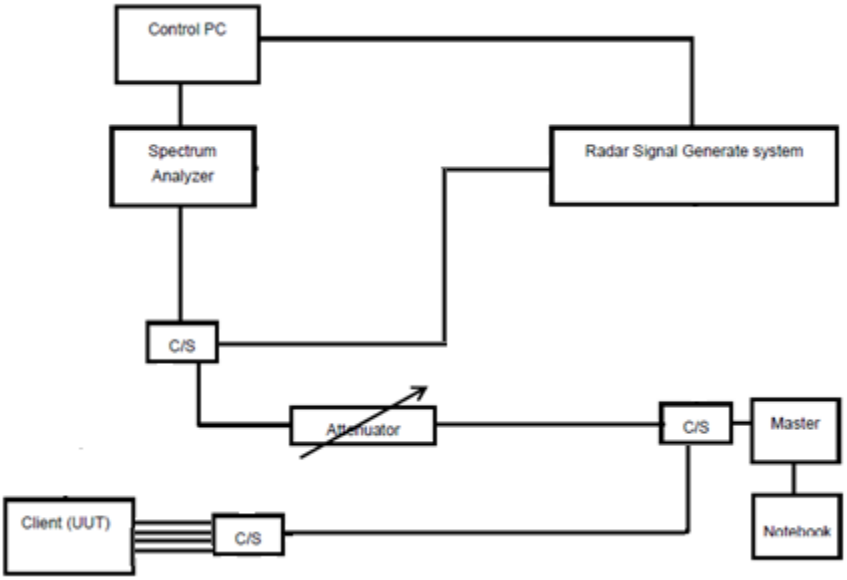

******* END OF REPORT *******