Room boost 700 MHz 4G LTE AT&T T-Mobile Booster instruction

Signal booster
Model: HT2018001

Package Contents

1.Booster
2.Outside Panel Antenna with RG58 Cables(50 or 45 feet)
3.Power Adapter
4.Inside Whip Antenna
5.Mounting Screw Kit
6.3M double-sided glue

Quick Install Diagram

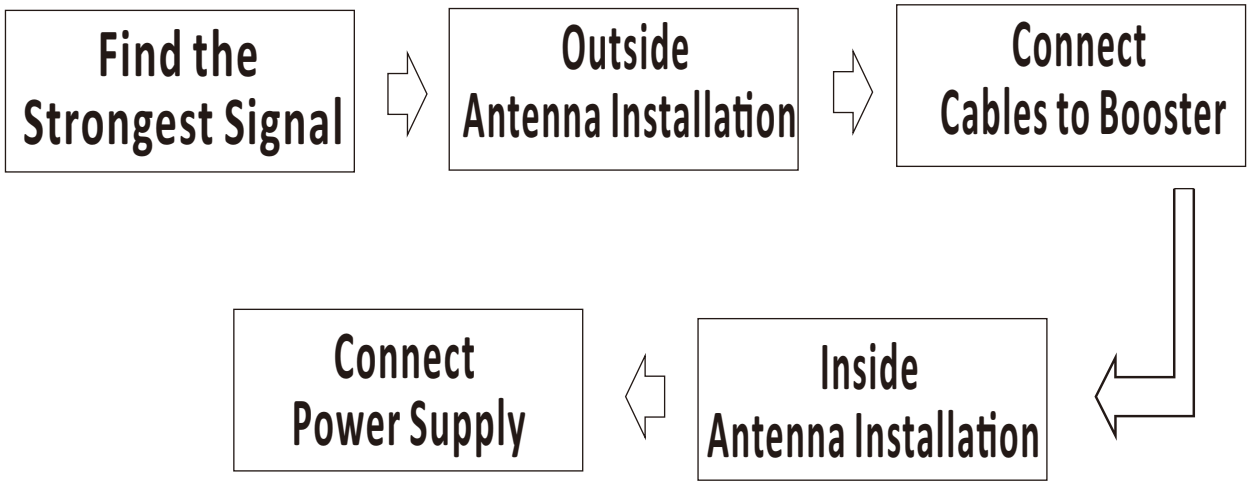

1.Find the Strongest Signal

Take your cell phone and walk around the house where you need to install the Booster. You can find the location of the strongest signal, and the outdoor antenna is best installed in this location.

2.Outside Antenna Installation

The outdoor antenna must be installed on the roof or height. There is no shelter around the antenna. The antenna is fixed on the pole. The antenna can rotate around the pole, so that the antenna can be better aligned with the direction of the cell tower and receive the strongest signal.

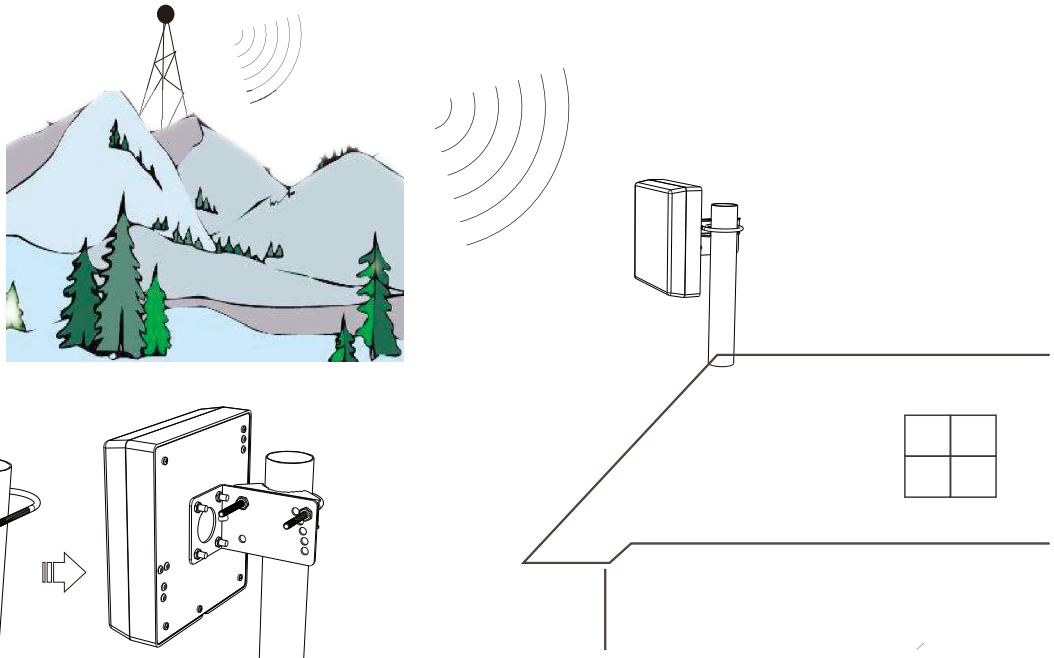

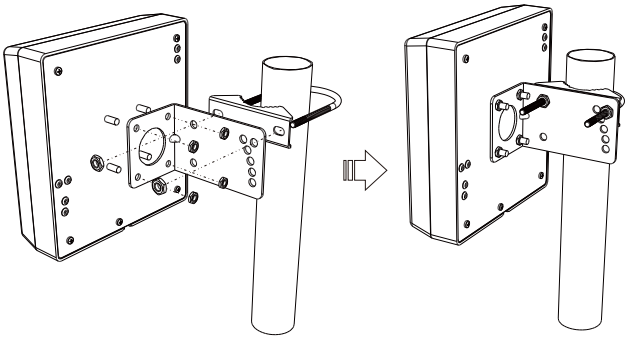

3.Connect Cables to Booster

Next, the cable of the outdoor antenna is introduced into the room. Notice that the cable does not have a bending of less than 60 degrees so as not to damage the cable to affect the performance. Connect the cable to the outside joint of the booster

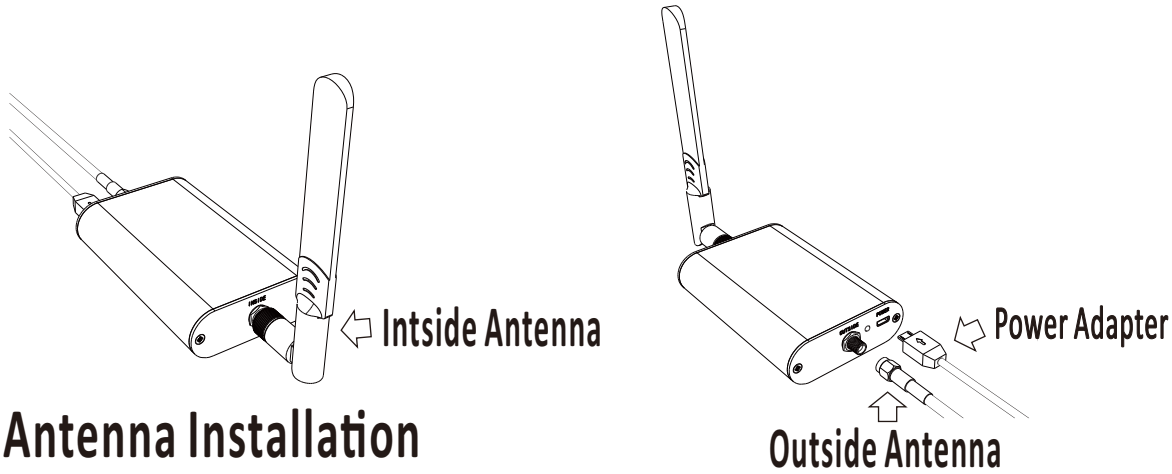

4.Inside Antenna Installation

Now put the indoor antenna on the Booster, pay attention to the relative position between the indoor antenna and the outdoor antenna, we must meet the requirements of the following picture. If the space is limited, try to make the outdoor antenna higher, otherwise the Booster will not work properly.

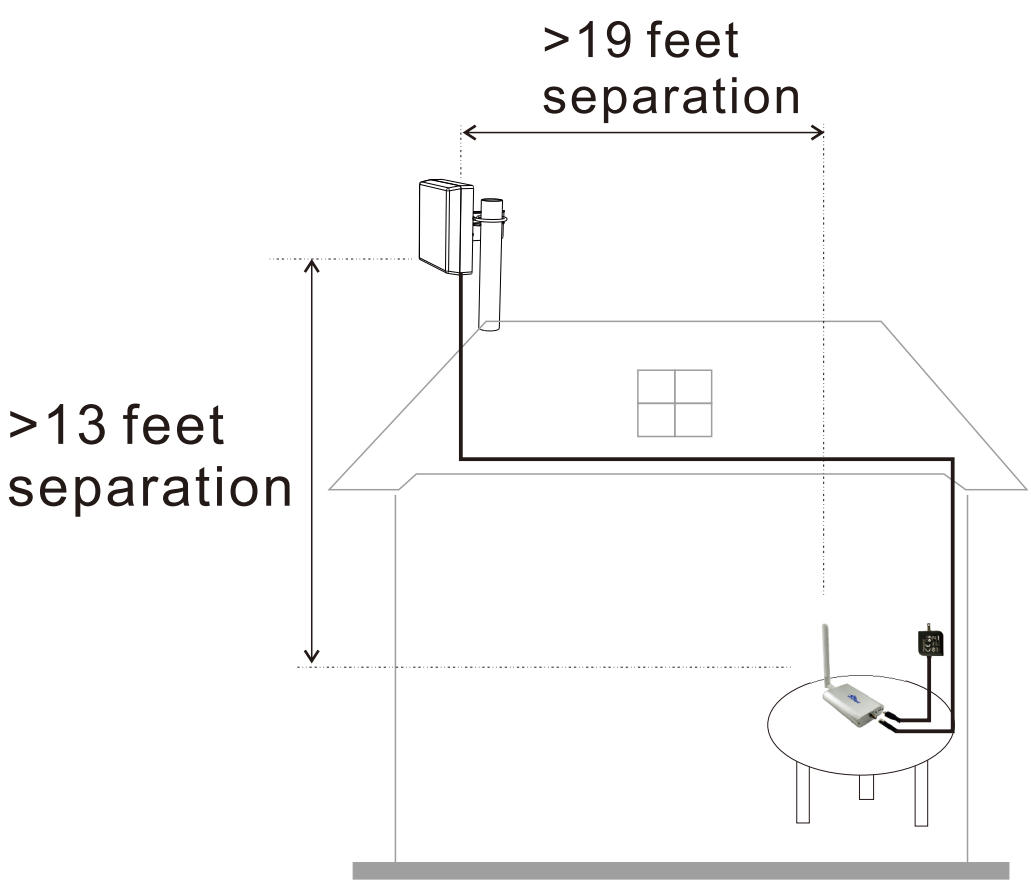

Booster is fixed to the desktop or wall by 3M double-sided glue, so it can not be moved when working.

5.Connect Power Supply

Finally, the power is turned on, if your mobile phone signal has been enhanced, Congratulations, you succeed. If you are not very satisfied with the intensity, then adjust the angle of the outdoor antenna until you feel the cell phone signal is satisfied.

*WARNING:

1.The booster is designed for use in indoor ONLY.

2.Do NOT cover the booster body with anything. This prevents if from cooling down. If the product becomes overheated, it will automatically shut off or cause permanent damage.

3.Use only the power supply provided by Room boost. Any other non-approved products by Room boost of self-made power cables may damage the booster.

4.Unauthorized antennas, cables, and/or coupling devices are prohibited by FCC regulations. Please contact FCC for details: 1-888-CALL-FCC.

This is a CONSUMER device

BEFORE USE , you **MUST REGISTER THIS DEVICE** with your wireless provider and have your provider' s consent .Most wireless provider consent to the use of signal boosters .Some providers may not consent to the use of this device on their network .If you are unsure ,contact your provider.

You **MUST** operate this device with approved antenna and cables as specified by the manufacturer .Antennas **MUST** be installed at least 20cm (8inches) from any person.

You **MUST** cease operating this device immediately if requested by the FCC or a licensed wireless service provider.

WARNING.E911 location information may not be provided or may be inaccurate for calls served by using this device.

This device may be operated **ONLY** in a fixed location for in-building use.

Antenna Kitting Information

Component	Prod No. Description	Gain/Loss				Notes
		698~787MHZ	824~894 MHz	1850~1990 MHz	1700MHz\2100 MHz	
Outside Cable	HT240 45Feet	2.9dB	3.3dB	4.8dB	4.8dB\5.2dB	
Outside Cable	HTG58 45Feet	6.9dB	7.5 dB	11.7 dB	11.1dB \12.3dB	
Outside Cable	HT400- 75Feet	4.2dB	4.4dB	6.1dB	5.8dB\6.5dB	
Inside Cable	HTG6 75Feet	3.5dB	4.1dB	6.2dB	5.5dB\6.9dB	
Inside Cable	HTG6 45Feet	2.1dB	2.4 dB	3.7dB	3.3 dB\4.1dB	
Inside Cable	HT240 90Feet	5.8dB	6.7 dB	9.7 dB	9.6dB\10.2dB	
Inside Cable	HT240 75Feet	4.8dB	5.6dB	8.2dB	8.2dB\8.6 dB	
Inside Cable	HT240 60Feet	3.9dB	4.5dB	6.6dB	6.5 dB\6.7dB	
Inside Cable	HT240 45Feet	2.9dB	3.3dB	4.87dB	4.8dB\5.2dB	
Inside Cable	HT400- 30Feet	1.9dB	1.9dB	2.9dB	2.5dB\2.9dB	
Inside Cable	HT400- 75Feet	4.2dB	4.4dB	6.1dB	5.8dB\6.5dB	
Inside Cable	HTG58- 30Feet	4.5dB	4.9dB	7.6dB	7.2dB\8dB	
Inside Cable	HT400- 20Feet	1.3dB	1.35dB	1.8dB	1.8dB\1.9dB	
Inside Cable	HTG58- 15Feet	2.3dB	2.5dB	3.9dB	3.7dB\ 4.1dB	
Inside Cable	HT400- 30Feet	1.9dB	1.95dB	2.8dB	2.55dB\2.9dB	
Outside Antenna	HT Log periodic antenna	7dBi	7dBi	10dBi	10dBi\10dBi	Directional antenna
Outside Antenna	HT Yagi antenna	9dBi	9dBi	\	\	Directional antenna
Outside Antenna	HT Wall antenna	9dBi	9dBi	9dBi	9dBi	Directional antenna
Inside Antenna	HT Wall antenna	9dBi	9dBi	9dBi	9dBi\9dBi	Directional antenna
Inside Antenna	HT Rod antenna	1dBi	1dBi	0dBi	0dBi\0dBi	Omni antenna
Inside Antenna	HT Omnidirectional ceiling antenna	3dBi	3dBi	3dBi	3dBi	Omni antenna
Lightning Protector	HT-LP01	0.1 dB	0.1 dB	0.18dB	0.16dB\0.2dB	For any external antenna

All equivalent antennas and cables are suitable for use with the ROOMBOOST.

Description of network protection features:

This booster including safeguards to protect the cellular network from interference. Each Signal Booster is individually tested and factory set to ensure FCC compliance.

1.The Signal Booster cannot be adjusted without factory reprogramming or disabling the hardware.

2.The Signal Booster will amplify, but ONLY incoming and outgoing signals in order to increase coverage of authorized frequency bands.

3.If the Signal Booster is not in use for five minutes, it will reduce gain until a signal is detected.

4.If a detected signal is too high in a frequency band, or if the Signal Booster detects an oscillation, the Signal Booster will automatically turn the power off on that band.

5.For a detected oscillation the Signal Booster will automatically resume normal operation after a minimum of 1 minute. After 5 times consecutive such automatic restarts, if the detected oscillation still remains, any problematic bands are permanently shut off until the Signal Booster has been manually restarted by reconnecting power supply to the Signal Booster.

6.Noise power, gain, and linearity are maintained by the Signal Booster's microprocessor.

This device complies with Part 15 of FCC Rules. Operation is subject to the following two conditions: (1) this device may not cause harmful interference, and (2) this device must accept any interference received, including interference that may cause undesired operation. This equipment has been tested and found to comply with the limits for a Class B digital device, pursuant to Part 15 of the FCC Rules. These limits are designed to provide reasonable protection against harmful interference in a residential installation. This equipment generates and can radiate radio frequency energy and, if not installed and used in accordance with the instructions, may cause harmful interference to radio communications. However, there is no guarantee that interference will not occur in a particular installation. If this equipment does cause harmful interference to radio or television reception, which can be determined by turning the equipment off and on, the user is encouraged to try to correct the interference by one or more of the following measures: -- Reorient or relocate the receiving antenna. -- Increase the separation between the equipment and receiver. -- Connect the equipment into an outlet on a circuit different from that to which the receiver is connected. -- Consult the dealer or an experienced radio/TV technician for help

If you have any questions or concerns when installing or operating your cell phone booster, please email us:

hometech0111@163.com