TREE OF LIGHT USER GUIDE

Please read instructions carefully before using,

and keep it properly for future inspection

FCC Statement

This device complies with part 15 of the FCC rules. Operation is subject to the following two conditions: (1) this device may not cause harmful interference, and (2) this device must accept any interference received, including interference that may cause undesired operation.

Changes or modifications not expressly approved by the party responsible for compliance could void the user's authority to operate the equipment.

NOTE: This equipment has been tested and found to comply with the limits for a Class B digital device, pursuant to part 15 of the FCC Rules. These limits are designed to provide reasonable protection against harmful interference in a residential installation. This equipment generates uses and can radiate radio frequency energy and, if not installed and used in accordance with the instructions, may cause harmful interference to radio communications. However, there is no guarantee that interference will not occur in a particular installation. If this equipment does cause harmful interference to radio or television reception, which can be determined by turning the equipment off and on, the user is encouraged to try to correct the interference by one or more of the following measures:

- Reorient or relocate the receiving antenna.
- Increase the separation between the equipment and receiver.
- Connect the equipment into an outlet on a circuit different from that to which the receiver is connected.
- Consult the dealer or an experienced radio/TV technician for help.

Radiation Exposure Statement

To comply with FCC RF exposure compliance requirements, this grant is applicable to only mobile configurations. The antennas used for this transmitter must be installed to provide a separation distance of at least 20cm from all persons and must not be co-located or operating in conjunction with any other antenna or transmitter.

Specification:

Model Name：Tree of Light
Wireless Charging：5W/7.5W/10W
Conversion Rate：70%~75%
Brightness：200Lumens
Output Voltage：12V/2A

BT Version：V5.0
BT Chipset：Mountain BP1048
BT Frequency：2.4GHZ
BT Profile：A2DP,AVRCP

Packaging Contents:

·Tree of Light x1 ·Charging Adaptor x1 ·User Guide x1

Working Conditons：

Indoor Use only
Temperature：-40℃~40℃/-40°F~104°F
Humidity：40%~60%

Precautions:

Please read the user guide before usage. Improper operation may cause direct/
potential damage to this product.

1. Do not disassemble the product or attempt to fix it;
2. Kindly use the original charging adaptor provided;
3. Do not replace any part of this product or battery if there is one;.
4. Do not crush, puncture, dispose in fire, put in the water or other liquids;.
5. Do not expose the product in intense sunlight, heat or any high-temp erature environment;.
6. Avoid drops, bumps, abrasions and impacts;
7. If there is any reason to believe that there is damage on the product, please stop using it;
8. If you believe there is any damage or quality issue, please contact us customer support;
9. Children need to use this product under the escort of adult guardianship.

Appearance&Interface Description

1.Play/Pause(long press for BT)

2.LED Light

3.Wireless Charging Pad

4.LED Brightness Controller

5.Charge-In port

6.Charging Indicator Light

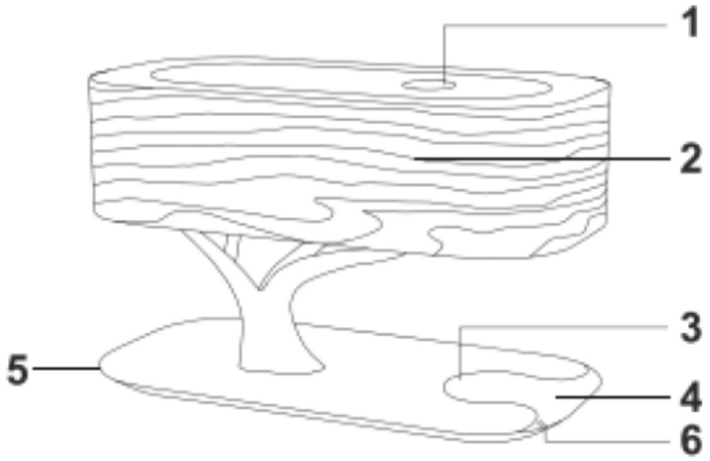

7.Volume-/Next Song

8.Volume+/Previous Song

9.Bluetooth Indicator

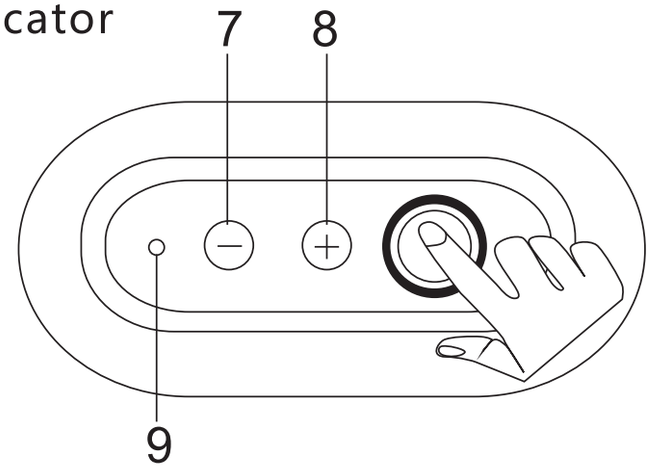

Appearance & Interface Description

1.Plugging in AC Adapter

2.Turning the LED Light On/Off

- Light on automatically when plugging in.
- Touch the LED Brightness Controller again to turn off the light.
- Slide your finger over the LED Brightness Controller to dim or brighten the LED light.

3.Wireless Charging (apply for partial models)

- Place your QI Wireless Charging enabled smartphone over the Wireless Charging Pad.
- Then begin to charge.
- The indicator light on pad will change from yellow into ice blue.

4.Paring Tree of Light

- Press "Power Button" until the Bluetooth indicator flashes with "Disconnected" notification sound or certain sound.
- Turn on the BT function of your devices and scan "LZ-S2017" out.
- Pair to "LZ-S2017" with "Connect" notification sound or certain sound.
- To control the volume and playback via paired device or top pad of Tree of Light.
- Quick click "+" or "-" to control volume. Long press "+" for next song and "-" for previous song.The blue indicator light will be off if Tree of Light not in use for a long time.

5.Good Night Mood Mode

- Touch the Stepless Dimming Controller for 3-5 seconds to activate Good Night Moodmode and light will be turned off automatically within 30 minutes.
- Any operation will exit the Good Night Mood mode.

6.TWS function

- The mobile phone or device connects 1pc product as the host, press the volume "+" and "-" at the same time, the sound will be prompted. and automatically search for another product, Stop searching after 1 minute.
- Turn on another product as a slave. After the slave is connected to the master, the master will prompt the sound. operate any one product, which can control the sound function of another product at the same time.
- Press the volume "+" and "-" of the main unit at the same time again, the two products will be disconnected and the sound will be prompted.

中文

主要规格：

产品名称：树之光
无线充电：5W/7.5W/10W
转换率：70%–75%
亮度：200流明
输入功率：12V/2A
喇叭功率：5W
蓝牙版本：V5.0
蓝牙芯片：Mountain BP1048
蓝牙频率：2.4GHZ
蓝牙协议：A2DP&AVRCP

包装清单：

· 树之光x1　· 充电器x1　· 使用说明书x1

工作环境：

仅限室内使用
使用温度：–40℃~40℃/–40°F~104°F
使用湿度：40%~60%

安全警示：

在使用产品之前，请仔细阅读本段说明和警示。如操作不当，可能会引起产品的损坏。

1.如果发生故障，不要擅自拆装本产品。
2.请使用所提供的原装充电适配器。
3.请不要尝试自行更换产品的部件或者电池。
4.请不要压、刺、放入火中、短路产品或者放入水中以及其它液体里。
5.请勿将产品暴露在强烈的阳光、高温或高湿环境中。
6.避免跌落、颠簸、擦伤和撞击。
7.如果有任何理由相信产品有损坏，请停止使用。
8.如果您认为有任何损坏或质量问题，请联系我们的客服支持。
9.儿童需要在成人监护的陪同下使用该产品。

外观和功能说明：

1.播放/暂停（长按开启蓝牙功能）

2.LED灯

3.无线充电区域

4.LED无极调光区

5.电源接入口

6.充电指示

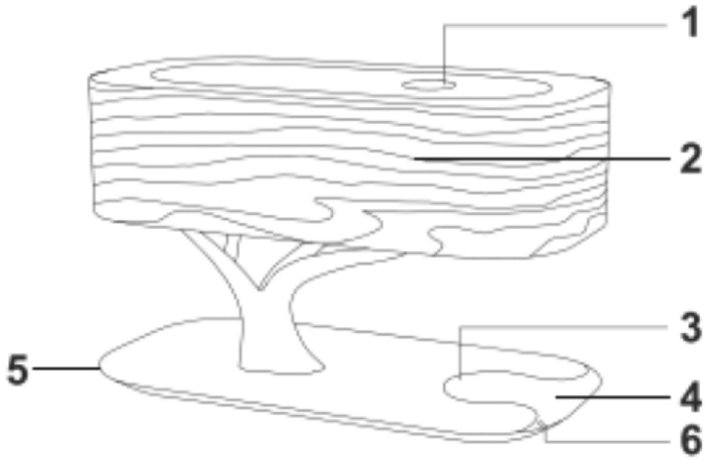

7.音量键 –/上一首

8.音量键 +/下一首

9.蓝牙指示灯

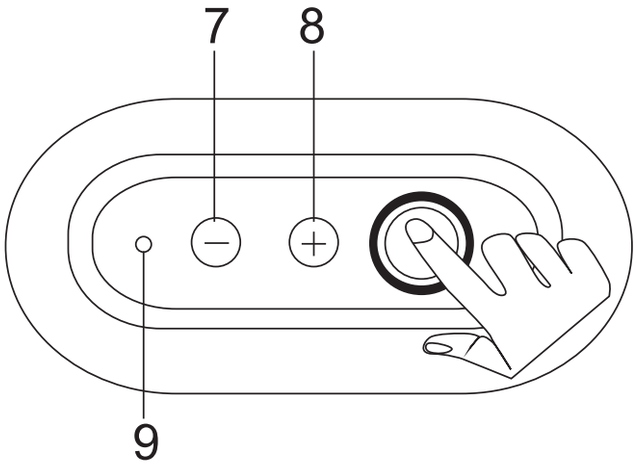

操作说明

1.插入电源适配器

2.控制LED灯光

· 插入适配器后，LED灯将自动打开并调到百分之50亮度。

· 触摸“LED无极调光区”任意位置即可关闭或打开LED灯。

· 将手指在“LED无极调光区”滑动，可以无极调节LED灯光亮度。

3.无线充电

· 将支持QI无线充电协议的智能手机或设备放在无线充电区上。

· 充电指示灯转变为蓝色，表示您的设备正在充电。

4.设备连接树之光

· 长按“播放／暂停”键，直到“蓝牙指示灯”闪烁，将有“Disconnected”的提示音或其他提示音响起。

· 打开设备上的蓝牙功能并搜索“LZ-S2017”。

· 在设备上点击并匹配“LZ-S2017”，成功时会有“Connect”的提示音或其他提示音响起。

· 可通过已连接到树之光的音源设备来控制音量及播放。

· 触摸顶部控制面板，触发按键灯亮起后即可通过顶部按键控制播放，点击“+”增加音量，点击“一”调低音量。长按“+”播放下一首，长按“-”播放上一首。如果长时间没有操作动作树之光的按键灯光将自动熄灭。

5.助眠模式

· 长按“LED无极调光区”3-5秒，启动助眠模式，灯光会自动调节到最暗状态，并于30分钟以后自动关闭。

· 在助眠模式下对“LED无级调光区”进行任意操作，即可退出助眠模式。

6.TWS功能

· 当手机或设备连接1台产品做主机，同时按音量“+”和“-”，提示音响起，自动搜索另外1台产品，60秒停止。

· 打开另外1台产品作副机，副机与主机联机后，主机提示音响起，操作任意1台产品，可同时控制另外1台产品的音响功能。

· 再次同时按主机的音量“+”和“-”，2台产品断开连接，提示音响起。意1台产品，可同时控制另外1台产品的音响功能。

· 再次同时按主机的音量“+”和“-”，2台产品断开连接，提示音响起。