TESTING LABORATORY
CERTIFICATE #4820.01

SAR EVALUATION REPORT

For

Xstar Smart Power Co.,Limited

9B,Cheong Tai Commercil Building,66 Wing Lok Street,Sheung Wan ,Hong Kong.

FCC ID: 2ARIR-0040A

Report Type:	**Product Type:**
Original Report	Mobile Phone

Report Number: RDG190919005-20

Report Date: 2019-10-22

Reviewed By: Rocky Xiao
RF Engineer
Rocky Xiao

Prepared By: Bay Area Compliance Laboratories Corp. (Dongguan)
No.69 Pulongcun, Puxinhu Industry Area,
Tangxia, Dongguan, Guangdong, China
Tel: +86-769-86858888
Fax: +86-769-86858891
www.baclcorp.com.cn

Note: This test report is prepared for the customer shown above and for the device described herein. It may not be duplicated or used in part without prior written consent from Bay Area Compliance Laboratories Corp. (Dongguan). This report must not be used by the customer to claim product certification, approval, or endorsement by A2LA* or any agency of the Federal Government. * This report may contain data that are not covered by the A2LA accreditation and are marked with an asterisk "*".

Attestation of Test Results			
EUT Information	**EUT Description**	Mobile Phone	
	Tested Model	S2	
	FCC ID	2ARIR-0040A	
	Serial Number	19091900520	
	Test Date	2019-09-19 ~ 2019-09-20	
MODE		**Max. SAR Level(s) Reported(W/kg)**	**Limit (W/kg)**
GSM 850	1g Head SAR	0.35	**1. 6**
	1g Body SAR	1.10	
PCS 1900	1g Head SAR	0.25	
	1g Body SAR	**1.31**	
WCDMA Band 2	1g Head SAR	**0.36**	
	1g Body SAR	1.04	
WCDMA Band 5	1g Head SAR	0.33	
	1g Body SAR	0.75	
Simultaneous	1g Head SAR	**0.73**	
	1g Body SAR	**1.50**	
	1g Body SAR	**1.50** (Hotspot)	
Applicable Standards	**FCC 47 CFR part 2.1093** Radiofrequency radiation exposure evaluation: portable devices		
	IEEE1528:2013 IEEE Recommended Practice for Determining the Peak Spatial-Average Specific Absorption Rate (SAR) in the Human Head from Wireless Communications Devices: Measurement Techniques		
	RF Exposure Procedures: TCB Workshop April 2019		
	IEC 62209-2:2010 Human exposure to radio frequency fields from hand-held and body-mounted wireless communication devices-Human models, instrumentation, and procedures-Part 2: Procedure to determine the specific absorption rate (SAR) for wireless communication devices used in close proximity to the human body (frequency range of 30 MHz to 6 GHz)		
	KDB procedures KDB 447498 D01 General RF Exposure Guidance v06 KDB 648474 D04 Handset SAR v01r03 KDB 865664 D01 SAR Measurement 100 MHz to 6 GHz v01r04 KDB 865664 D02 RF Exposure Reporting v01r02 KDB 941225 D01 3G SAR Procedures v03r01 KDB 941225 D06 Hotspot Mode v02r01		
Note: This wireless device has been shown to be capable of compliance for localized specific absorption rate (SAR) for General Population/Uncontrolled Exposure limits specified in **FCC 47 CFR part 2.1093** and has been tested in accordance with the measurement procedures specified in IEEE 1528-2013 and RF exposure KDB procedures. **The results and statements contained in this report pertain only to the device(s) evaluated.**			

TABLE OF CONTENTS

DOCUMENT REVISION HISTORY **4**
EUT DESCRIPTION **5**
TECHNICAL SPECIFICATION 5
REFERENCE, STANDARDS, AND GUIDELINES **6**
SAR LIMITS 7
FACILITIES **8**
DESCRIPTION OF TEST SYSTEM **9**
EQUIPMENT LIST AND CALIBRATION **15**
EQUIPMENTS LIST & CALIBRATION INFORMATION 15
SAR MEASUREMENT SYSTEM VERIFICATION **16**
LIQUID VERIFICATION 16
SYSTEM ACCURACY VERIFICATION 17
SAR SYSTEM VALIDATION DATA 18
EUT TEST STRATEGY AND METHODOLOGY **20**
TEST POSITIONS FOR DEVICE OPERATING NEXT TO A PERSON'S EAR 20
CHEEK/TOUCH POSITION 21
EAR/TILT POSITION 21
TEST POSITIONS FOR BODY-WORN AND OTHER CONFIGURATIONS 22
TEST DISTANCE FOR SAR EVALUATION 22
SAR EVALUATION PROCEDURE 23
CONDUCTED OUTPUT POWER MEASUREMENT **24**
PROVISION APPLICABLE 24
TEST PROCEDURE 24
RADIO CONFIGURATION 24
MAXIMUM TARGET OUTPUT POWER 28
TEST RESULTS: 28
STANDALONE SAR TEST EXCLUSION CONSIDERATIONS **33**
ANTENNAS LOCATION: 33
ANTENNA DISTANCE TO EDGE 33
STANDALONE SAR TEST EXCLUSION CONSIDERATIONS 33
STANDALONE SAR ESTIMATION: 34
SAR TEST EXCLUSION FOR THE EUT EDGE CONSIDERATIONS RESULT 34
SAR MEASUREMENT RESULTS **35**
SAR TEST DATA 35
SAR MEASUREMENT VARIABILITY **40**
SAR SIMULTANEOUS TRANSMISSION DESCRIPTION **41**
SAR PLOTS **44**
APPENDIX A MEASUREMENT UNCERTAINTY **45**
APPENDIX B EUT TEST POSITION PHOTOS **47**
APPENDIX C CALIBRATION CERTIFICATES **48**

DOCUMENT REVISION HISTORY

Revision Number	Report Number	Description of Revision	Date of Revision
1.0	RDG190919005-20	Original Report	2019-10-22

EUT DESCRIPTION

This report has been prepared on behalf of ***Xstar Smart Power Co.,Limited*** and their product ***Mobile Phone***, Model: ***S2***, FCC ID: ***2ARIR-0040A*** or the EUT (Equipment under Test) as referred to in the rest of this report.

**All measurement and test data in this report was gathered from production sample serial number: 19091900520 (Assigned by BACL).The EUT supplied by the applicant was received on 2019-09-18 .*

Technical Specification

Device Type:	Portable
Exposure Category:	Population / Uncontrolled
Antenna Type(s):	Internal Antenna
DTM Type:	Class B
Multi-slot Class:	GPRS(Class 12)
Body-Worn Accessories:	None
Face-Head Accessories:	None
Operation Mode :	GSM Voice, GPRS Data, WCDMA(R99 (Voice+Data), HSDPA/HSUPA/HSPA+), WLAN and Bluetooth
Frequency Band:	GSM 850: 824-849 MHz(TX); 869-894 MHz(RX) PCS 1900: 1850-1910 MHz(TX); 1930-1990 MHz(RX) WCDMA Band 2: 1850-1910 MHz(TX); 1930-1990 MHz(RX) WCDMA Band 5: 824-849 MHz(TX); 869-894 MHz(RX) WLAN 2.4G: 2412 -2462/2422 -2452 MHz Bluetooth : 2402 MHz-2480 MHz
Conducted RF Power:	GSM 850 : 31.81 dBm; PCS 1900: 29.24 dBm WCDMA Band 2: 23.35 dBm; WCDMA Band 5: 22.79 dBm WLAN 2.4G: 9.42 dBm Bluetooth(BDR/EDR): 4.44 dBm BLE: 3.87 dBm
Power Source:	3.7 VDC Rechargeable Battery
Normal Operation:	Head and Body-worn

REFERENCE, STANDARDS, AND GUIDELINES

FCC:

The Report and Order requires routine SAR evaluation prior to equipment authorization of portable transmitter devices, including portable telephones. For consumer products, the applicable limit is 1.6 mW/g as recommended by the ANSI/IEEE standard C95.1-1992 [6] for an uncontrolled environment (Paragraph 65). According to the Supplement C of OET Bulletin 65 “Evaluating Compliance with FCC Guide-lines for Human Exposure to Radio frequency Electromagnetic Fields", released on Jun 29, 2001 by the FCC, the device should be evaluated at maximum output power (radiated from the antenna) under “worst-case” conditions for normal or intended use, incorporating normal antenna operating positions, device peak performance frequencies and positions for maximum RF energy coupling.

This report describes the methodology and results of experiments performed on wireless data terminal. The objective was to determine if there is RF radiation and if radiation is found, what is the extent of radiation with respect to safety limits. SAR (Specific Absorption Rate) is the measure of RF exposure determined by the amount of RF energy absorbed by human body (or its parts) – to determine how the RF energy couples to the body or head which is a primary health concern for body worn devices. The limit below which the exposure to RF is considered safe by regulatory bodies in North America is 1.6 mW/g average over 1 gram of tissue mass.

CE:

The order requires routine SAR evaluation prior to equipment authorization of portable transmitter devices, including portable telephones. For consumer products, the applicable limit is 2 mW/g as recommended by EN62209-1 for an uncontrolled environment. According to the Standard, the device should be evaluated at maximum output power (radiated from the antenna) under “worst-case” conditions for normal or intended use, incorporating normal antenna operating positions, device peak performance frequencies and positions for maximum RF energy coupling.

This report describes the methodology and results of experiments performed on wireless data terminal. The objective was to determine if there is RF radiation and if radiation is found, what is the extent of radiation with respect to safety limits. SAR (Specific Absorption Rate) is the measure of RF exposure determined by the amount of RF energy absorbed by human body (or its parts) – to determine how the RF energy couples to the body or head which is a primary health concern for body worn devices. The limit below which the exposure to RF is considered safe by regulatory bodies in Europe is 2 mW/g average over 10 gram of tissue mass.

The test configurations were laid out on a specially designed test fixture to ensure the reproducibility of measurements. Each configuration was scanned for SAR. Analysis of each scan was carried out to characterize the above effects in the device.

SAR Limits

FCC Limit

EXPOSURE LIMITS	SAR (W/kg)	
	(General Population / Uncontrolled Exposure Environment)	(Occupational / Controlled Exposure Environment)
Spatial Average (averaged over the whole body)	0.08	0.4
Spatial Peak (averaged over any 1 g of tissue)	**1.60**	8.0
Spatial Peak (hands/wrists/feet/ankles averaged over 10 g)	4.0	20.0

CE Limit

EXPOSURE LIMITS	SAR (W/kg)	
	(General Population / Uncontrolled Exposure Environment)	(Occupational / Controlled Exposure Environment)
Spatial Average (averaged over the whole body)	0.08	0.4
Spatial Peak (averaged over any 10 g of tissue)	2.0	10
Spatial Peak (hands/wrists/feet/ankles averaged over 10 g)	4.0	20.0

Population/Uncontrolled Environments are defined as locations where there is the exposure of individual who have no knowledge or control of their exposure.

Occupational/Controlled Environments are defined as locations where there is exposure that may be incurred by people who are aware of the potential for exposure (i.e. as a result of employment or occupation).

General Population/Uncontrolled environments Spatial Peak limit 1.6W/kg (FCC) & 2 W/kg (CE) applied to the EUT.

FACILITIES

The Test site used by Bay Area Compliance Laboratories Corp. (Dongguan) to collect test data is located on the No.69 Pulongcun, Puxinhu Industry Area, Tangxia, Dongguan, Guangdong, China.

The lab has been recognized as the FCC accredited lab under the KDB 974614 D01 and is listed in the FCC Public Access Link (PAL) database, FCC Registration No. : 897218, the FCC Designation No. : CN1220.

The lab has been recognized by Innovation, Science and Economic Development Canada to test to Canadian radio equipment requirements, the CAB identifier : CN0022.

The test sites and measurement facilities used to collect data are located at:

☐ SAR Lab 1	☒ SAR Lab 2

DESCRIPTION OF TEST SYSTEM

These measurements were performed with the automated near-field scanning system DASY5 from Schmid & Partner Engineering AG (SPEAG) which is the Fifth generation of the system shown in the figure hereinafter:

DASY5 System Description

The DASY5 system for performing compliance tests consists of the following items:

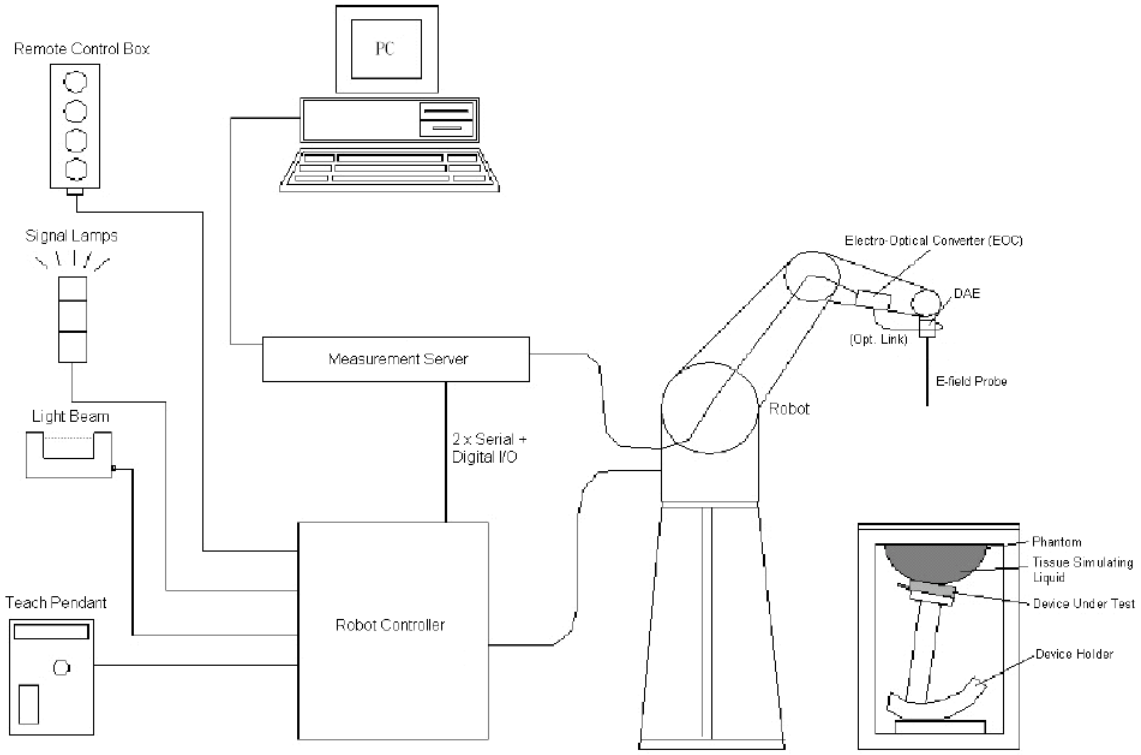

- A standard high precision 6-axis robot with controller, teach pendant and software. An arm extension for accommodating the data acquisition electronics (DAE).
- An isotropic field probe optimized and calibrated for the targeted measurement.
- A data acquisition electronics (DAE) which performs the signal application, signal multiplexing, AD-conversion, offset measurements, mechanical surface detection, collision detection, etc. The unit is battery powered with standard or rechargeable batteries. The signal is optically transmitted to the EOC.
- The Electro-optical converter (EOC) performs the conversion from optical to electrical signals for the digital communication to the DAE. To use optical surface detection, a special version of the EOC is required. The EOC signal is transmitted to the measurement server.
- The function of the measurement server is to perform the time critical tasks such as signal filtering, control of the robot operation and fast movement interrupts.
- The Light Beam used is for probe alignment. This improves the (absolute) accuracy of the probe positioning.
- A computer running Win7 professional operating system and the DASY52 software.
- Remote control and teach pendant as well as additional circuitry for robot safety such as warning lamps, etc.
- The phantom, the device holder and other accessories according to the targeted measurement.

DASY5 Measurement Server

The DASY5 measurement server is based on a PC/104 CPU board with a 400MHz Intel ULV Celeron, 128MB chip-disk and 128MB RAM. The necessary circuits for communication with the DAE4 (or DAE3) electronics box, as well as the 16 bit AD-converter system for optical detection and digital I/O interface are contained on the DASY5 I/O board, which is directly connected to the PC/104 bus of the CPU board.

The measurement server performs all real-time data evaluation of field measurements and surface detection, controls robot movements and handles safety operation. The PC operating system cannot interfere with these time critical processes. All connections are supervised by a watchdog, and disconnection of any of the cables to the measurement server will automatically disarm the robot and disable all program-controlled robot movements. Furthermore, the measurement server is equipped with an expansion port which is reserved for future applications. Please note that this expansion port does not have a standardized point out, and therefore only devices provided by SPEAG can be connected. Devices from any other supplier could seriously damage the measurement server.

Data Acquisition Electronics

The data acquisition electronics (DAE4) consist of a highly sensitive electrometer-grade preamplifier with auto-zeroing, a channel and gain-switching multiplexer, a fast 16 bit AD-converter and a command decoder with a control logic unit. Transmission to the measurement server is accomplished through an optical downlink for data and status information, as well as an optical uplink for commands and the clock.

The mechanical probe mounting device includes two different sensor systems for frontal and sideways probe contacts. They are used for mechanical surface detection and probe collision detection.

The input impedance of both the DAE4 as well as of the DAE3 box is 200MOhm; the inputs are symmetrical and floating. Common mode rejection is above 80 dB.

EX3DV4 E-Field Probes

Frequency	10 MHz to > 6 GHz Linearity: ± 0.2 dB (30 MHz to 6 GHz)
Directivity	± 0.3 dB in TSL (rotation around probe axis) ± 0.5 dB in TSL (rotation normal to probe axis)
Dynamic Range	10 µW/g to > 100 mW/g Linearity: ± 0.2 dB (noise: typically < 1 µW/g)
Dimensions	Overall length: 337 mm (Tip: 20 mm) Tip diameter: 2.5 mm (Body: 12 mm) Typical distance from probe tip to dipole centers: 1 mm
Application	High precision dosimetric measurements in any exposure scenario (e.g., very strong gradient fields); the only probe that enables compliance testing for frequencies up to 6 GHz with precision of better 30%.
Compatibility	DASY3, DASY4, DASY52 SAR and higher, EASY4/MRI

Calibration Frequency Points for EX3DV4 E-Field Probes SN: 7329 Calibrated: 2018/9/30

Calibration Frequency Point(MHz)	Frequency Range(MHz)		Conversion Factor		
	From	To	X	Y	Z
750 Head	650	850	10.01	10.01	10.01
750 Body	650	850	10.23	10.23	10.23
900 Head	850	1000	9.66	9.66	9.66
900 Body	850	1000	9.79	9.79	9.79
1750 Head	1650	1850	8.35	8.35	8.35
1750 Body	1650	1850	8.05	8.05	8.05
1900 Head	1850	2000	8.1	8.1	8.1
1900 Body	1850	2000	7.7	7.7	7.7
2450 Head	2350	2550	7.62	7.62	7.62
2450 Body	2350	2550	7.47	7.47	7.47
2600 Head	2550	2700	7.38	7.38	7.38
2600 Body	2550	2700	7.12	7.12	7.12
5200 Head	5090	5250	5.52	5.52	5.52
5200 Body	5090	5250	4.92	4.92	4.92
5300 Head	5250	5410	5.28	5.28	5.28
5300 Body	5250	5410	4.79	4.79	4.79
5600 Head	5490	5700	4.71	4.71	4.71
5600 Body	5490	5700	4.14	4.14	4.14
5800 Head	5700	5910	4.68	4.68	4.68
5800 Body	5700	5910	4.37	4.37	4.37

SAM Twin Phantom

The SAM twin phantom is a fiberglass shell phantom with 2mm shell thickness (except the ear region, where shell thickness
increases to 6 mm). The phantom has three measurement areas:
_ Left Head
_ Right Head
_ Flat phantom

The phantom table for the DASY systems based on the robots have the size of 100 x 50 x 85 cm (L x W x H).
For easy dislocation these tables have fork lift cut outs at the bottom.
The bottom plate contains three pairs of bolts for locking the device holder. The device holder positions are adjusted to the standard measurement positions in the three sections. Only one device holder is necessary if two phantoms are used (e.g., for different liquids)

A white cover is provided to cover the phantom during off-periods to prevent water evaporation and changes in the liquid parameters. Free space scans of devices on top of this phantom cover are possible. Three reference marks are provided on the phantom counter. These reference marks are used to teach the absolute phantom position relative to the robot.

Robots

The DASY5 system uses the high precision industrial robot. The robot offers the same features important for our application:

- High precision (repeatability 0.02mm)
- High reliability (industrial design)
- Low maintenance costs (virtually maintenance free due to direct drive gears; no belt drives)
- Jerk-free straight movements (brushless synchrony motors; no stepper motors)
- Low ELF interference (motor control fields shielded via the closed metallic construction shields)

The above mentioned robots are controlled by the Staubli CS8c robot controllers. All information regarding the use and maintenance of the robot arm and the robot controller is contained on the CDs delivered along with the robot. Paper manuals are available upon request direct from Staubli.

Area Scans

Area scans are defined prior to the measurement process being executed with a user defined variable spacing between each measurement point (integral) allowing low uncertainty measurements to be conducted. Scans defined for FCC applications utilize a 15mm 2 step integral, with 1.5mm interpolation used to locate the peak SAR area used for zoom scan assessments.

Where the system identifies multiple SAR peaks (which are within 25% of peak value) the system will provide the user with the option of assessing each peak location individually for zoom scan averaging.

Zoom Scan (Cube Scan Averaging)

The averaging zoom scan volume utilized in the DASY5 software is in the shape of a cube and the side dimension of a 1 g or 10 g mass is dependent on the density of the liquid representing the simulated tissue. A density of 1000 kg/m^3 is used to represent the head and body tissue density and not the phantom liquid density, in order to be consistent with the definition of the liquid dielectric properties, i.e. the side length of the 1g cube is 10mm,with the side length of the 10g cube is 21.5mm.

When the cube intersects with the surface of the phantom, it is oriented so that 3 vertices touch the surface of the shell or the center of a face is tangent to the surface. The face of the cube closest to the surface is modified in order to conform to the tangent surface.

The zoom scan integer steps can be user defined so as to reduce uncertainty, but normal practice for typical test applications (including FCC) utilize a physical step of 7 x7 x 7 (5mmx5mmx5mm) providing a volume of 30 mm in the X & Y & Z axis.

Tissue Dielectric Parameters for Head and Body Phantoms

The head tissue dielectric parameters recommended by the IEC 62209-1:2016

Recommended Tissue Dielectric Parameters for Head liquid

Table A.3 – Dielectric properties of the head tissue-equivalent liquid

Frequency MHz	Relative permittivity ε_r	Conductivity (σ) S/m
300	45,3	0,87
450	43,5	0,87
750	*41,9*	*0,89*
835	41,5	0,90
900	41,5	0,97
1 450	40,5	1,20
1 500	*40,4*	*1,23*
1 640	*40,2*	*1,31*
1 750	*40,1*	*1,37*
1 800	40,0	1,40
1 900	40,0	1,40
2 000	40,0	1,40
2 100	*39,8*	*1,49*
2 300	*39,5*	*1,67*
2 450	39,2	1,80
2 600	*39,0*	*1,96*
3 000	38,5	2,40
3 500	*37,9*	*2,91*
4 000	*37,4*	*3,43*
4 500	*36,8*	*3,94*
5 000	*36,2*	*4,45*
5 200	*36,0*	*4,66*
5 400	*35,8*	*4,86*
5 600	*35,5*	*5,07*
5 800	*35,3*	*5,27*
6 000	*35,1*	*5,48*

NOTE For convenience, permittivity and conductivity values at those frequencies which are not part of the original data provided by Drossos et al. [33] or the extension to 5 800 MHz are provided (i.e. the values shown *in italics*). These values were linearly interpolated between the values in this table that are immediately above and below these values, except the values at 6 000 MHz that were linearly extrapolated from the values at 3 000 MHz and 5 800 MHz.

Note:

1, Effective February 19, 2019, FCC has permitted the use of single head-tissue simulating liquid specified in IEC 62209-1 for all SAR tests.

2, Mix and Match of traditional FCC SAR TSLs and IEC 62209-1 TSL in a single application is not permitted TSL can be changed in a Permissive Change.

3, If SAR increases and original SAR > 1.2 W/kg, additional SAR measurements will be required IEC 62209-1 TSL is an alternative, not mandatory at this time.

4, If FCC parameters are used, ±5% tolerance. If IEC parameters, ±10%.

5, In this case, IEC parameters applied

EQUIPMENT LIST AND CALIBRATION

Equipments List & Calibration Information

Equipment	Model	S/N	Calibration Date	Calibration Due Date
DASY5 Test Software	DASY52.10	N/A	NCR	NCR
DASY5 Measurement Server	DASY5 4.5.12	1567	NCR	NCR
Data Acquisition Electronics	DAE4	772	2018/9/28	2019/9/28
E-Field Probe	EX3DV4	7329	2018/9/30	2019/9/29
Mounting Device	MD4HHTV5	BJPCTC0152	NCR	NCR
Twin SAM	Twin SAM V5.0	1412	NCR	NCR
Dipole, 750 MHz	D750V3	1167	2016/11/8	2019/11/7
Dipole, 1900 MHz	D1900V2	543	2016/10/25	2019/10/24
Simulated Tissue 750 MHz	TS-750	1710075001	Each Time	/
Simulated Tissue 1900 MHz	TS-1900	1709190001	Each Time	/
Network Analyzer	8753C	3033A02857	2019/8/3	2020/8/3
Dielectric assessment kit	1253	SM DAK 040 CA	NCR	NCR
Signal Generator	E8247C	MY43321350	2018/12/10	2019/12/10
EPM Series Power Meter	E4419B	MY45103907	2019/5/9	2020/5/9
Power Amplifier	ZVA-183-S+	5969001149	NCR	NCR
Directional Coupler	441493	520Z	NCR	NCR
Attenuator	20dB, 100W	LN749	NCR	NCR
Attenuator	6dB, 150W	2754	NCR	NCR
Wireless communication tester	E5515C	MY48367501	2018/12/10	2019/12/10
R&S, universal Radio Communication Tester	CMU200	110 822	2018/12/10	2019/12/10
Wideband Radio Communication Tester	CMW500	110479	2018/12/10	2019/12/10

SAR MEASUREMENT SYSTEM VERIFICATION

Liquid Verification

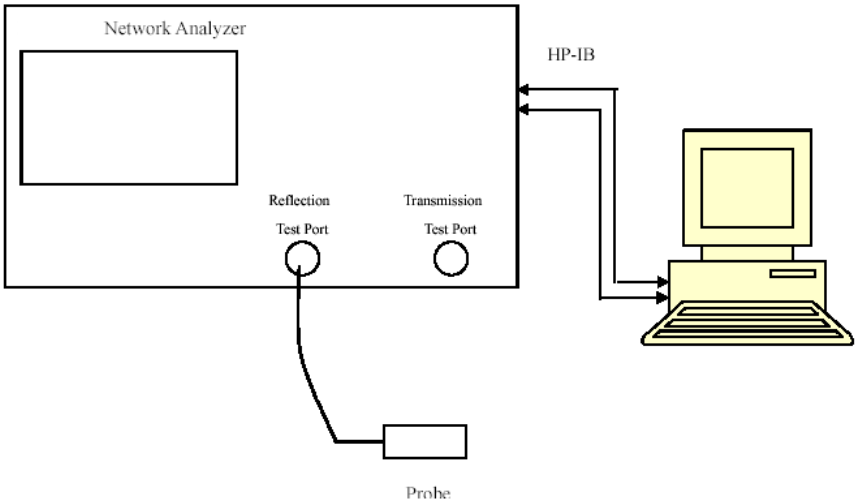

Liquid Verification Setup Block Diagram

Liquid Verification Results

Frequency (MHz)	Liquid Type	Liquid Parameter		Target Value		Delta (%)		Tolerance (%)
		ε_r	σ (S/m)	ε_r	σ (S/m)	$\Delta\varepsilon_r$	Δσ (S/m)	
750	Simulated Tissue 750 MHz	41.367	0.862	41.9	0.89	-1.27	-3.15	±10
824.2	Simulated Tissue 750 MHz	40.981	0.878	41.55	0.9	-1.37	-2.44	±10
826.4	Simulated Tissue 750 MHz	40.626	0.886	41.54	0.9	-2.2	-1.56	±10
836.6	Simulated Tissue 750 MHz	40.891	0.924	41.5	0.94	-1.47	-1.7	±10
846.6	Simulated Tissue 750 MHz	40.984	0.933	41.5	0.94	-1.24	-0.74	±10
848.8	Simulated Tissue 750 MHz	40.831	0.945	41.5	0.94	-1.61	0.53	±10

**Liquid Verification above was performed on 2019/09/20.*

Frequency (MHz)	Liquid Type	Liquid Parameter		Target Value		Delta (%)		Tolerance (%)
		ε_r	σ (S/m)	ε_r	σ (S/m)	$\Delta\varepsilon_r$	Δσ (S/m)	
1850.2	Simulated Tissue 1900 MHz	39.363	1.365	40	1.4	-1.59	-2.5	±10
1852.4	Simulated Tissue 1900 MHz	39.308	1.377	40	1.4	-1.73	-1.64	±10
1880	Simulated Tissue 1900 MHz	38.957	1.391	40	1.4	-2.61	-0.64	±10
1900	Simulated Tissue 1900 MHz	38.986	1.423	40	1.4	-2.54	1.64	±10
1907.6	Simulated Tissue 1900 MHz	38.961	1.418	40	1.4	-2.6	1.29	±10
1909.8	Simulated Tissue 1900 MHz	38.992	1.421	40	1.4	-2.52	1.5	±10

**Liquid Verification above was performed on 2019/09/19.*

System Accuracy Verification

Prior to the assessment, the system validation kit was used to test whether the system was operating within its specifications of ±10%. The validation results are tabulated below. And also the corresponding SAR plot is attached as well in the SAR plots files.

The spacing distances in the **System Verification Setup Block Diagram** is given by the following:

a) s = 15 mm ± 0,2 mm for 300 MHz ≤ f ≤ 1 000 MHz;

b) s = 10 mm ± 0,2 mm for 1 000 MHz < f ≤ 3 000 MHz;

c) s = 10 mm ± 0,2 mm for 3 000 MHz < f ≤ 6 000 MHz.

System Verification Setup Block Diagram

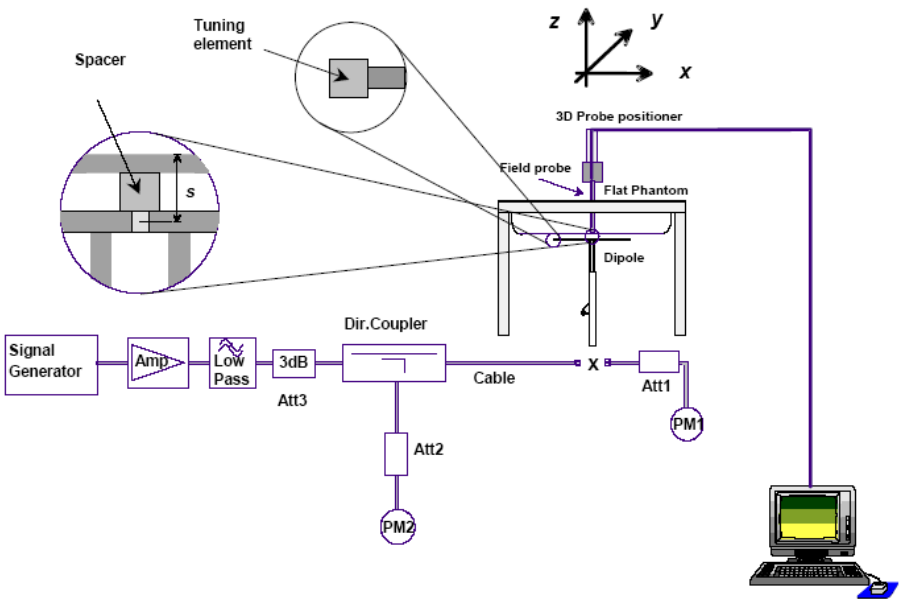

System Accuracy Check Results

Date	Frequency Band	Liquid Type	Input Power (mW)	Measured SAR (W/kg)		Normalized to 1W (W/kg)	Target Value (W/kg)	Delta (%)	Tolerance (%)
2019/09/20	750 MHz	Simulated Tissue 750 MHz	100	1g	0.796	7.96	8.23	-3.28	±10
2019/09/19	1900 MHz	Simulated Tissue 1900 MHz	100	1g	4.20	42.0	40.3	4.22	±10

*The SAR values above are normalized to 1 Watt forward power.

SAR SYSTEM VALIDATION DATA

System Performance 750 MHz

DUT: D750V3; Type: 750 MHz; Serial: 1167

Communication System:CW; Frequency: 750 MHz; Duty Cycle: 1:1
Medium parameters used: f = 750 MHz; σ = 0.862 S/m; ε_r = 41.367; ρ = 1000 kg/m^3
Phantom section: Flat Section

DASY5 Configuration:

- Probe: EX3DV4 - SN7329; ConvF(10.01, 10.01, 10.01) @ 750 MHz; Calibrated: 2018/9/30
- Sensor-Surface: 1.4mm (Mechanical Surface Detection)
- Electronics: DAE4 Sn772; Calibrated: 2018/9/28
- Phantom: Twin SAM; Type: Twin SAM V5.0; Serial: 1412
- Measurement SW: DASY52, Version 52.10 (2); SEMCAD X Version 14.6.12 (7470)

Area Scan (41x101x1): Interpolated grid: dx=1.500 mm, dy=1.500 mm
Maximum value of SAR (interpolated) = 1.03 W/kg

Zoom Scan (5x5x7)/Cube 0: Measurement grid: dx=8mm, dy=8mm, dz=5mm
Reference Value = 30.85 V/m; Power Drift = 0.05 dB
Peak SAR (extrapolated) = 1.34 W/kg
SAR(1 g) = 0.796 W/kg; SAR(10 g) = 0.525 W/kg
Maximum value of SAR (measured) = 1.09 W/kg

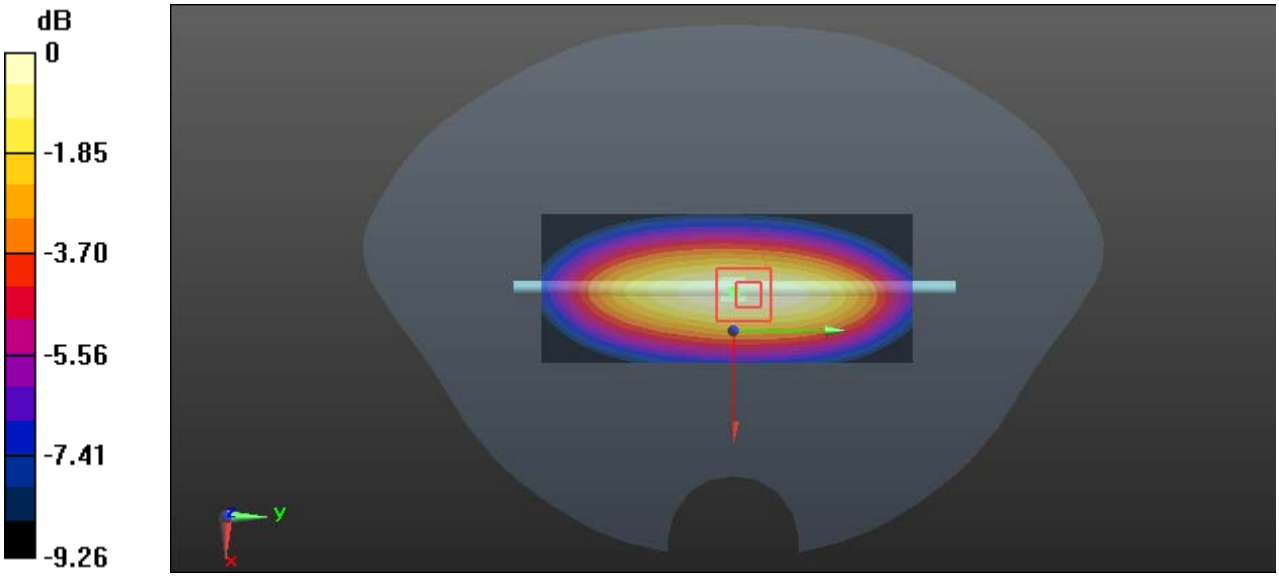

0 dB = 1.09 W/kg = 0.37 dBW/kg

System Performance 1900 MHz

DUT: D1900V2; Type: 1900 MHz; Serial: 543

Communication System: CW; Frequency: 1900 MHz; Duty Cycle: 1:1
Medium parameters used: f = 1900 MHz; σ = 1.423 S/m; ε_r = 38.986; ρ = 1000 kg/m^3
Phantom section: Flat Section

DASY5 Configuration:

- Probe: EX3DV4 - SN7329; ConvF(8.1, 8.1, 8.1) @ 1900 MHz; Calibrated: 2018/9/30
- Sensor-Surface: 1.4mm (Mechanical Surface Detection)
- Electronics: DAE4 Sn772; Calibrated: 2018/9/28
- Phantom: Twin SAM; Type: Twin SAM V5.0; Serial: 1412
- Measurement SW: DASY52, Version 52.10 (2); SEMCAD X Version 14.6.12 (7470)

Area Scan (41x51x1): Interpolated grid: dx=1.500 mm, dy=1.500 mm
Maximum value of SAR (interpolated) = 6.79 W/kg

Zoom Scan (5x5x7)/Cube 0: Measurement grid: dx=8mm, dy=8mm, dz=5mm
Reference Value = 56.56 V/m; Power Drift = -0.03 dB
Peak SAR (extrapolated) = 7.68 W/kg
SAR(1 g) = 4.20 W/kg; SAR(10 g) = 2.23 W/kg
Maximum value of SAR (measured) = 6.45 W/kg

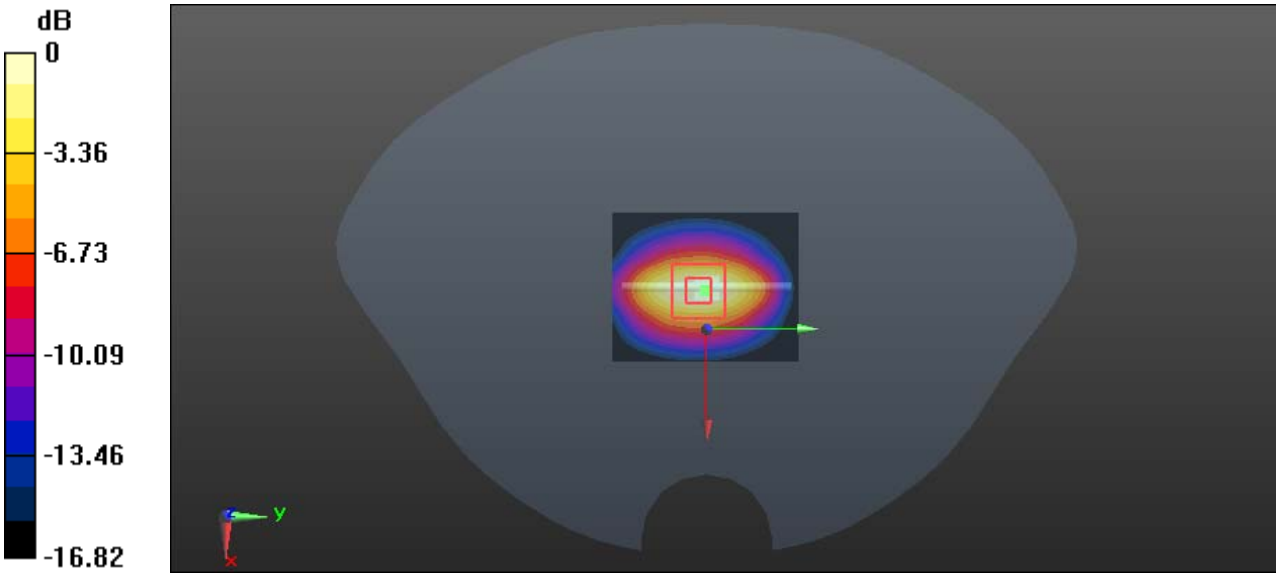

0 dB = 6.45 W/kg = 8.10 dBW/kg

EUT TEST STRATEGY AND METHODOLOGY

Test Positions for Device Operating Next to a Person's Ear

This category includes most wireless handsets with fixed, retractable or internal antennas located toward the top half of the device, with or without a foldout, sliding or similar keypad cover. The handset should have its earpiece located within the upper ¼ of the device, either along the centerline or off-centered, as perceived by its users. This type of handset should be positioned in a normal operating position with the "test device reference point" located along the "vertical centerline" on the front of the device aligned to the "ear reference point". The "test device reference point" should be located at the same level as the center of the earpiece region. The "vertical centerline" should bisect the front surface of the handset at its top and bottom edges. A "ear reference point" is located on the outer surface of the head phantom on each ear spacer. It is located 1.5 cm above the center of the ear canal entrance in the "phantom reference plane" defined by the three lines joining the center of each "ear reference point" (left and right) and the tip of the mouth.

A handset should be initially positioned with the earpiece region pressed against the ear spacer of a head phantom. For the SCC-34/SC-2 head phantom, the device should be positioned parallel to the "N-F" line defined along the base of the ear spacer that contains the "ear reference point". For interim head phantoms, the device should be positioned parallel to the cheek for maximum RF energy coupling. The "test device reference point" is aligned to the "ear reference point" on the head phantom and the "vertical centerline" is aligned to the "phantom reference plane". This is called the "initial ear position". While maintaining these three alignments, the body of the handset is gradually adjusted to each of the following positions for evaluating SAR:

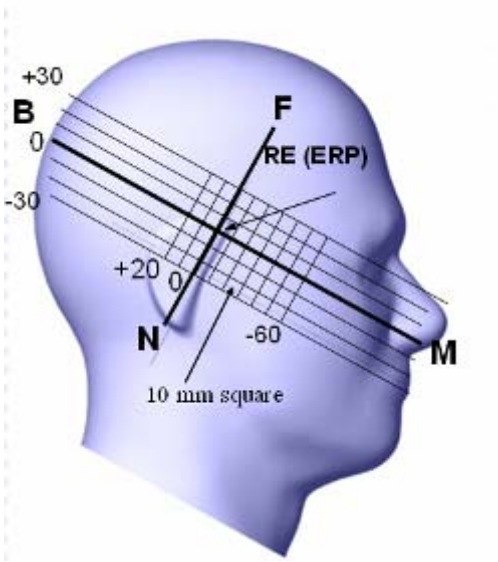

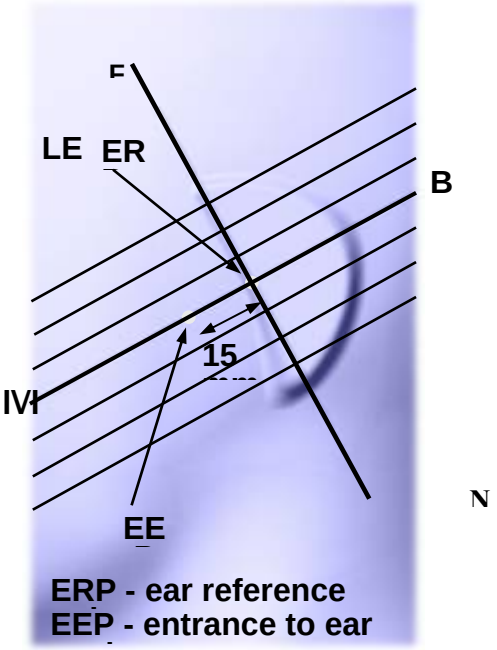

Cheek/Touch Position

The device is brought toward the mouth of the head phantom by pivoting against the "ear reference point" or along the "N-F" line for the SCC-34/SC-2 head phantom.

This test position is established:

When any point on the display, keypad or mouthpiece portions of the handset is in contact with the phantom.

(or) When any portion of a foldout, sliding or similar keypad cover opened to its intended self-adjusting normal use position is in contact with the cheek or mouth of the phantom.

For existing head phantoms – when the handset loses contact with the phantom at the pivoting point, rotation should continue until the device touches the cheek of the phantom or breaks its last contact from the ear spacer.

Cheek /Touch Position

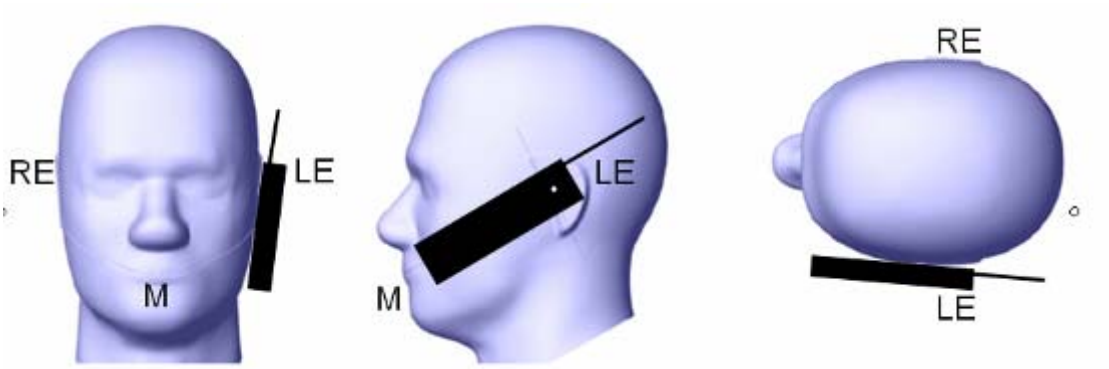

Ear/Tilt Position

With the handset aligned in the "Cheek/Touch Position":

1) If the earpiece of the handset is not in full contact with the phantom's ear spacer (in the "Cheek/Touch position") and the peak SAR location for the "Cheek/Touch" position is located at the ear spacer region or corresponds to the earpiece region of the handset, the device should be returned to the "initial ear position" by rotating it away from the mouth until the earpiece is in full contact with the ear spacer.

2) (otherwise) The handset should be moved (translated) away from the cheek perpendicular to the line passes through both "ear reference points" (note: one of these ear reference points may not physically exist on a split head model) for approximate 2-3 cm. While it is in this position, the device handset is tilted away from the mouth with respect to the "test device reference point" until the inside angle between the vertical centerline on the front surface of the phone and the horizontal line passing through the ear reference point is by 15 80°. After the tilt, it is then moved (translated) back toward the head perpendicular to the line passes through both "ear reference points" until the device touches the phantom or the ear spacer. If the antenna touches the head first, the positioning process should be repeated with a tilt angle less than 15° so that the device and its antenna would touch the phantom simultaneously. This test position may require a device holder or positioner to achieve the translation and tilting with acceptable positioning repeatability.

If a device is also designed to transmit with its keypad cover closed for operating in the head position, such positions should also be considered in the SAR evaluation. The device should be tested on the left and right side of the head phantom in the "Cheek/Touch" and "Ear/Tilt" positions. When applicable, each configuration should be tested with the antenna in its fully extended and fully retracted positions. These test configurations should be tested at the high, middle and low frequency channels of each operating mode; for example, AMPS, CDMA, and TDMA. If the SAR measured at the middle channel for each test configuration (left, right, Cheek/Touch, Tilt/Ear, extended and retracted) is at least 2.0 dB lower than the SAR limit, testing at the high and low channels is optional for such test configuration(s). If the transmission band of the test device is less than 10 MHz, testing at the high and low frequency channels is optional.

Ear /Tilt 15° Position

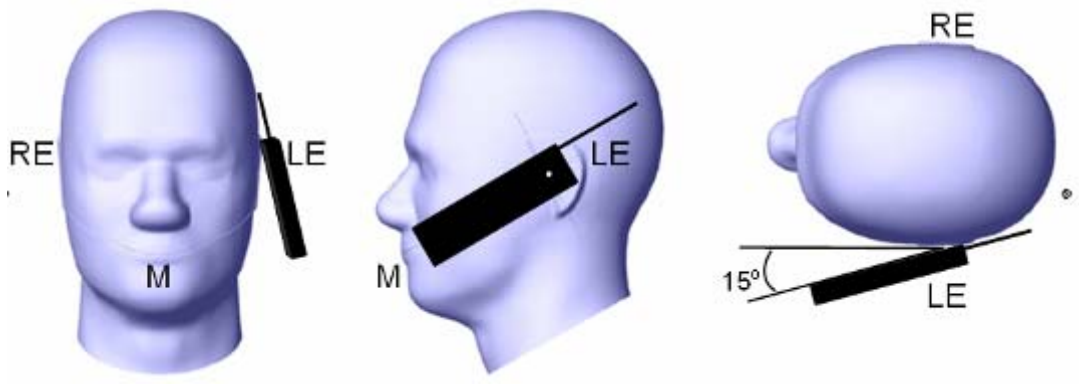

Test positions for body-worn and other configurations

Body-worn operating configurations should be tested with the belt-clips and holsters attached to the device and positioned against a flat phantom in normal use configurations. Devices with a headset output should be tested with a headset connected to the device. When multiple accessories that do not contain metallic components are supplied with the device, the device may be tested with only the accessory that dictates the closest spacing to the body. When multiple accessories that contain metallic components are supplied with the device, the device must be tested with each accessory that contains a unique metallic component. If multiple accessories share an identical metallic component (e.g., the same metallic belt-clip used with different holsters with no other metallic components), only the accessory that dictates the closest spacing to the body must be tested.

Body-worn accessories may not always be supplied or available as options for some devices that are intended to be authorized for body-worn use. A separation distance of 1.5 cm between the back of the device and a flat phantom is recommended for testing body-worn SAR compliance under such circumstances. Other separation distances may be used, but they should not exceed 2.5 cm. In these cases, the device may use body-worn accessories that provide a separation distance greater than that tested for the device provided however that the accessory contains no metallic components.

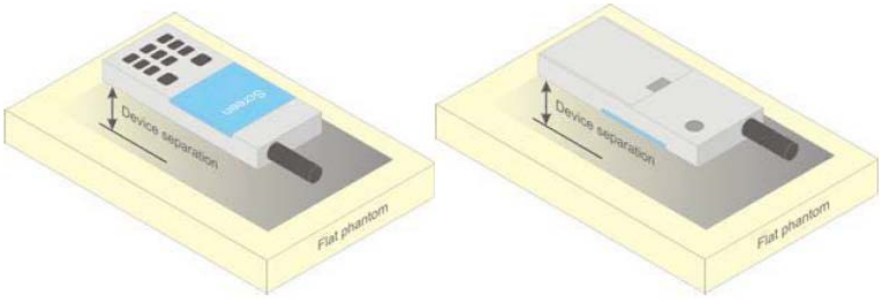

Figure 5 – Test positions for body-worn devices

Test Distance for SAR Evaluation

In this case the EUT(Equipment Under Test) is set 10mm away from the phantom, the test distance is 10mm.

SAR Evaluation Procedure

The evaluation was performed with the following procedure:

Step 1: Measurement of the SAR value at a fixed location above the ear point or central position was used as a reference value for assessing the power drop. The SAR at this point is measured at the start of the test and then again at the end of the testing.

Step 2: The SAR distribution at the exposed side of the head was measured at a distance of 4 mm from the inner surface of the shell. The area covered the entire dimension of the head or radiating structures of the EUT, the horizontal grid spacing was 15 mm x 15 mm, and the SAR distribution was determined by integrated grid of 1.5mm x 1.5mm. Based on these data, the area of the maximum absorption was determined by spline interpolation. The first Area Scan covers the entire dimension of the EUT to ensure that the hotspot was correctly identified.

Step 3: Around this point, a volume of 30 mm x 30 mm x 30 mm was assessed by measuring 7x 7 x 7 points. On the basis of this data set, the spatial peak SAR value was evaluated under the following procedure:

1) The data at the surface were extrapolated, since the center of the dipoles is 1.2 mm away from the tip of the probe and the distance between the surface and the lowest measuring point is 1.3 mm. The extrapolation was based on a least square algorithm. A polynomial of the fourth order was calculated through the points in z-axes. This polynomial was then used to evaluate the points between the surface and the probe tip.

2) The maximum interpolated value was searched with a straightforward algorithm. Around this maximum the SAR values averaged over the spatial volumes (1 g or 10 g) were computed by the 3D-Spline interpolation algorithm. The 3D-Spline is composed of three one dimensional splines with the “Not a knot"-condition (in x, y and z-directions). The volume was integrated with the trapezoidal-algorithm. One thousand points (10 x 10 x 10) were interpolated to calculate the averages.

All neighboring volumes were evaluated until no neighboring volume with a higher average value was found.

Step 4: Re-measurement of the SAR value at the same location as in Step 1. If the value changed by more than 5%, the evaluation was repeated.

CONDUCTED OUTPUT POWER MEASUREMENT

Provision Applicable

The measured peak output power should be greater and within 5% than EMI measurement.

Test Procedure

The RF output of the transmitter was connected to the input of the EMI Test Receiver through Connector.

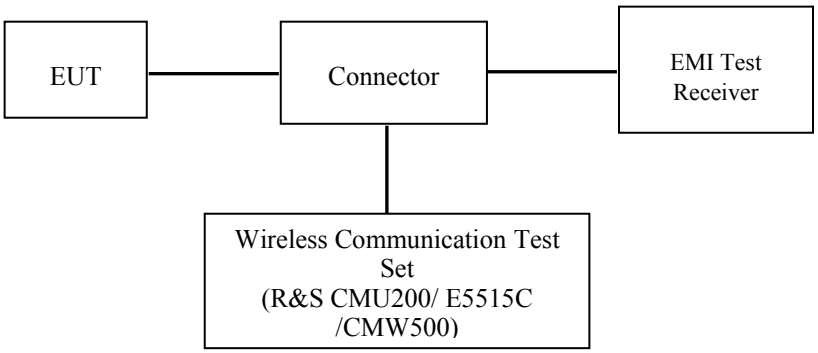

GSM/WCDMA

Radio Configuration

The power measurement was configured by the Wireless Communication Test Set.

GSM/GPRS

Function: Menu select > GSM Mobile Station > GSM 850/1900
Press Connection control to choose the different menus
Press RESET > choose all the reset all settings
Connection Press Signal Off to turn off the signal and change settings
Network Support > GSM + GPRS
Main Service > Packet Data
Service selection > Test Mode A – Auto Slot Config. off
MS Signal Press Slot Config Bottom on the right twice to select and change the number of time slots and power setting
> Slot configuration > Uplink/Gamma
> 33 dBm for GPRS 850
> 30 dBm for GPRS 1900
BS Signal Enter the same channel number for TCH channel (test channel) and BCCH channel
Frequency Offset > + 0 Hz
Mode > BCCH and TCH
BCCH Level > -85 dBm (May need to adjust if link is not stabe)
BCCH Channel > choose desire test channel [Enter the same channel number for TCH channel (test channel) and BCCH channel]

Channel Type > Off
P0 > 4 dB
Slot Config >Unchanged (if already set under MS signal)
TCH > choose desired test channel
Hopping > Off

Main Timeslot > 3
Network Coding Scheme > CS4 (GPRS)
Bit Stream >2E9-1 PSR Bit Stream
AF/RF Enter appropriate offsets for Ext. Att. Output and Ext. Att. Input
Connection Press Signal on to turn on the signal and change settings

WCDMA Release 99

The following tests were conducted according to the test requirements outlines in section 5.2 of the 3GPP TS34.121-1 specification. The EUT has a nominal maximum output power of 24dBm (+1.7/-3.7).

WCDMA General Settings	Loopback Mode	Test Mode 1
	Rel99 RMC	12.2kbps RMC
	Power Control Algorithm	Algorithm2
	β_c/β_d	8/15

HSDPA

The following tests were conducted according to the test requirements outlines in section 5.2 of the 3GPP TS34.121-1 specification.

	Mode	HSDPA	HSDPA	HSDPA	HSDPA
	Subset	1	2	3	4
WCDMA General Settings	Loopback Mode	Test Mode 1			
	Rel99 RMC	12.2kbps RMC			
	HSDPA FRC	H-Set1			
	Power Control Algorithm	Algorithm2			
	β_c	2/15	12/15	15/15	15/15
	β_d	15/15	15/15	8/15	4/15
	β_d(SF)	64			
	β_c/β_d	2/15	12/15	15/8	15/4
	β_{hs}	4/15	24/15	30/15	30/15
	MPR(dB)	0	0	0.5	0.5
HSDPA Specific Settings	DACK	8			
	DNAK	8			
	DCQI	8			
	Ack-Nack repetition factor	3			
	CQI Feedback	4ms			
	CQI Repetition Factor	2			
	Ahs=βhs/ βc	30/15			

HSUPA

The following tests were conducted according to the test requirements outlines in section 5.2 of the 3GPP TS34.121-1 specification.

	Mode	**HSUPA**	**HSUPA**	**HSUPA**	**HSUPA**	**HSUPA**
	Subset	**1**	**2**	**3**	**4**	**5**
WCDMA General Settings	Loopback Mode	Test Mode 1				
	Rel99 RMC	12.2kbps RMC				
	HSDPA FRC	H-Set1				
	HSUPA Test	HSUPA Loopback				
	Power Control Algorithm	Algorithm2				
	β_c	11/15	6/15	15/15	2/15	15/15
	β_d	15/15	15/15	9/15	15/15	0
	β_{ec}	209/225	12/15	30/15	2/15	5/15
	β_c/ β_d	11/15	6/15	15/9	2/15	-
	β_{hs}	22/15	12/15	30/15	4/15	5/15
	CM(dB)	1.0	3.0	2.0	3.0	1.0
	MPR(dB)	0	2	1	2	0
HSDPA Specific Settings	DACK	8				
	DNAK	8				
	DCQI	8				
	Ack-Nack repetition factor	3				
	CQI Feedback	4ms				
	CQI Repetition Factor	2				
	Ahs=β_{hs}/ β_c	30/15				
HSUPA Specific Settings	DE-DPCCH	6	8	8	5	7
	DHARQ	0	0	0	0	0
	AG Index	20	12	15	17	21
	ETFCI	75	67	92	71	81
	Associated Max UL Data Rate kbps	242.1	174.9	482.8	205.8	308.9
	Reference E_FCls	E-TFCI 11 E E-TFCI PO 4 E-TFCI 67 E-TFCI PO 18 E-TFCI 71 E-TFCI PO23 E-TFCI 75 E-TFCI PO26 E-TFCI 81 E-TFCI PO 27		E-TFCI 11 E-TFCI PO4 E-TFCI 92 E-TFCI PO 18	E-TFCI 11 E E-TFCI PO 4 E-TFCI 67 E-TFCI PO 18 E-TFCI 71 E-TFCI PO23 E-TFCI 75 E-TFCI PO26 E-TFCI 81 E-TFCI PO 27	

HSPA+

Sub-test	β_c (Note3)	β_d	β_{HS} (Note1)	β_{ec}	β_{ed} (2xSF2) (Note 4)	β_{ed} (2xSF4) (Note 4)	CM (dB) (Note 2)	MPR (dB) (Note 2)	AG Index (Note 4)	E-TFCI (Note 5)	E-TFCI (boost)
1	1	0	30/15	30/15	$\beta_{ed}1$: 30/15 $\beta_{ed}2$: 30/15	$\beta_{ed}3$: 24/15 $\beta_{ed}4$: 24/15	3.5	2.5	14	105	105

Note 1: Δ_{ACK}, Δ_{NACK} and Δ_{CQI} = 30/15 with β_{hs} = 30/15 * β_c .
Note 2: CM = 3.5 and the MPR is based on the relative CM difference, MPR = MAX(CM-1,0).
Note 3: DPDCH is not configured, therefore the β_c is set to 1 and β_d = 0 by default.
Note 4: β_{ed} can not be set directly; it is set by Absolute Grant Value.
Note 5: All the sub-tests require the UE to transmit 2SF2+2SF4 16QAM EDCH and they apply for UE using E-DPDCH category 7. E-DCH TTI is set to 2ms TTI and E-DCH table index = 2. To support these E-DCH configurations DPDCH is not allocated. The UE is signalled to use the extrapolation algorithm.

The following tests were conducted according to the test requirements in Table C.11.1.4 of 3GPP TS 34.121-1

Maximum Target Output Power

Max Target Power(dBm)			
Mode/Band	Channel		
	Low	Middle	High
GSM 850	31.9	31.9	31.9
GPRS 1 TX Slot	31.7	31.7	31.7
GPRS 2 TX Slot	31.2	31.2	31.2
GPRS 3 TX Slot	29.6	29.6	29.6
GPRS 4 TX Slot	28.3	28.3	28.3
PCS 1900	29.3	29.3	29.3
GPRS 1 TX Slot	29.1	29.1	29.1
GPRS 2 TX Slot	28.5	28.5	28.5
GPRS 3 TX Slot	27.1	27.1	27.1
GPRS 4 TX Slot	25.8	25.8	25.8
WCDMA Band 2	23.5	23.5	23.5
HSDPA	22.6	22.6	22.6
HSUPA	22.5	22.5	22.5
HSPA+	21.5	21.5	21.5
WCDMA Band 5	22.9	22.9	22.9
HSDPA	21.8	21.8	21.8
HSUPA	21.8	21.8	21.8
HSPA+	21.2	21.2	21.2
WLAN 2.4G(802.11b)	9.5	9.5	9.5
WLAN 2.4G(802.11g)	9.5	9.5	9.5
WLAN 2.4G(802.11n HT20)	9.5	9.5	9.5
WLAN 2.4G(802.11n HT40)	9.5	9.5	9.5
Bluetooth BDR/EDR	5	5	5
Bluetooth LE	4	4	4

Test Results:

GSM:

Band	Channel No.	Frequency (MHz)	RF Output Power (dBm)
GSM 850	128	824.2	31.62
	190	836.6	31.69
	251	848.8	**31.81**
PCS 1900	512	1850.2	29.15
	661	1880	**29.24**
	810	1909.8	29.14

GPRS:

Band	Channel No.	Frequency (MHz)	RF Output Power (dBm)			
			1 slot	2 slots	3 slots	4 slots
GSM 850	128	824.2	31.55	30.99	29.38	28.14
	190	836.6	31.53	31.03	29.45	28.13
	251	848.8	31.61	31.07	29.39	28.19
PCS 1900	512	1850.2	28.97	28.34	26.95	25.61
	661	1880	28.91	28.39	26.92	25.68
	810	1909.8	28.90	28.30	26.87	25.64

For SAR, the time based average power is relevant, the difference in between depends on the duty cycle of the TDMA signal.

Number of Time slot	1	2	3	4
Duty Cycle	1:8	1:4	1:2.66	1:2
Time based Ave. power compared to slotted Ave. power	-9 dB	-6 dB	-4.25 dB	-3 dB
Crest Factor	8	4	2.66	2

The time based average power for GPRS

Band	Channel No.	Frequency (MHz)	Time based average Power (dBm)			
			1 slot	2 slot	3 slots	4 slots
GSM 850	128	824.2	22.55	24.99	25.13	25.14
	190	836.6	22.53	25.03	**25.20**	25.13
	251	848.8	22.61	25.07	25.14	25.19
PCS 1900	512	1850.2	19.97	22.34	**22.70**	22.61
	661	1880	19.91	22.39	22.67	22.68
	810	1909.8	19.9	22.3	22.62	22.64

Note:

1. Rohde & Schwarz Radio Communication Tester (CMU200) was used for the measurement of GSM peak and average output power for active timeslots.
2 .For GSM voice, 1 timeslot has been activated with power level 5 (850 MHz band) and 0 (1900 MHz band).
3 .For GPRS, 1, 2, 3 and 4 timeslots has been activated separately with power level 3(850 MHz band) and 3(1900 MHz band).

WCDMA:
Results (12.2kbps RMC)

Band	Frequency (MHz)	RF Output Power (dBm)
WCDMA Band 2	1852.4	23.31
	1880	**23.35**
	1907.6	23.25
WCDMA Band 5	826.4	**22.79**
	836.6	22.71
	846.6	22.65

Results (HSDPA)

Band	Frequency (MHz)	RF Output Power (dBm)			
		Subset 1	Subset 2	Subset 3	Subset 4
WCDMA Band 2	1852.4	22.43	22.18	21.92	21.58
	1880	22.27	22.19	21.96	21.92
	1907.6	22.54	22.30	22.03	21.89
WCDMA Band 5	826.4	21.73	21.50	21.35	21.41
	836.6	21.54	21.41	21.31	21.27
	846.6	21.54	21.41	21.36	21.26

Results (HSUPA)

Band	Frequency (MHz)	RF Output Power (dBm)				
		Subset 1	Subset 2	Subset 3	Subset 4	Subset 5
WCDMA Band 2	1852.4	22.30	22.08	21.90	21.98	21.81
	1880	22.39	22.04	21.98	21.82	21.78
	1907.6	22.41	22.00	21.92	21.81	21.71
WCDMA Band 5	826.4	21.69	21.46	21.27	21.20	21.22
	836.6	21.30	21.24	21.22	21.25	21.09
	846.6	21.33	21.26	21.26	21.04	21.15

Results (HSPA+)

Band	Frequency (MHz)	RF Output Power (dBm)
WCDMA Band 2	1852.4	21.36
	1880	21.30
	1907.6	21.26
WCDMA Band 5	826.4	21.12
	836.6	21.03
	846.6	21.07

Note:

1. The default test configuration is to measure SAR with an established radio link between the EUT and a communication test set using a 12.2 kbps RMC (reference measurement Channel) Configured in Test Loop Model 1.
2. KDB 941225 D01-Body SAR is not required for HSUPA/HSDPA/HSPA+ when the maximum average output of each RF channel is less than ¼ dB higher than measured 12.2kbps RMC or the maximum SAR for 12.2kbps RMC is < 75% of SAR limit.

WLAN 2.4G:

Mode	Channel frequency	Data Rate	Conducted Average Output Power(dBm)
802.11b	2412	1Mbps	9.04
	2437		**9.42**
	2462		9.09
802.11g	2412	6Mbps	9.23
	2437		9.33
	2462		9.19
802.11n HT20	2412	MCS0	9.34
	2437		9.40
	2462		9.28
802.11n HT40	2422	MCS0	9.36
	2437		9.35
	2452		9.12

Bluetooth:

Mode	Channel frequency (MHz)	RF Output Power (dBm)
BDR(GFSK)	2402	**4.44**
	2441	4.19
	2480	3.90
EDR(π/4-DQPSK)	2402	4.24
	2441	3.93
	2480	3.78
EDR(8DPSK)	2402	4.31
	2441	3.97
	2480	3.73
Bluetooth LE 1M	2402	3.39
	2440	3.43
	2480	**3.87**

Standalone SAR test exclusion considerations

Antennas Location:

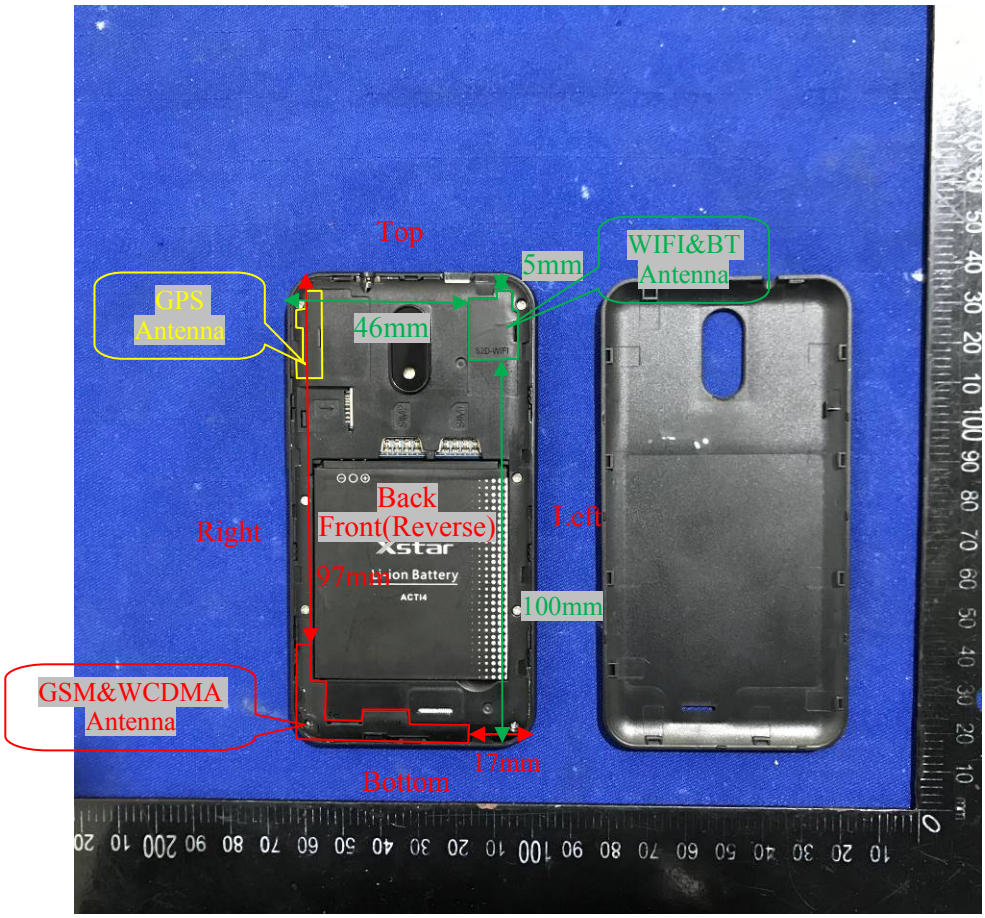

Antenna Distance To Edge

Antenna Distance To Edge(mm)						
Antenna	**Back**	**Front**	**Left**	**Right**	**Top**	**Bottom**
WWAN Antenna(GSM/WCDMA)	< 5	5	17	< 5	97	< 5
WLAN/BT Antenna	< 5	5	< 5	46	5	100

Standalone SAR test exclusion considerations

Mode	Frequency (MHz)	Pavg (dBm)	Pavg (mW)	Distance (mm)	Calculated value	Threshold (1-g)	SAR Test Exclusion
WLAN 2.4G	2462	9.5	8.91	0	2.8	3	YES
Bluetooth	2480	5	3.16	0	1.0	3	YES

NOTE:
The 1-g and 10-g SAR test exclusion thresholds for 100 MHz to 6 GHz at test separation distances ≤ 50 mm are determined by:
[(max. power of channel, including tune-up tolerance, mW)/(min. test separation distance, mm)] ·
[√f(GHz)] ≤ 3.0 for 1-g SAR and ≤7.5 for 10-g extremity SAR, where
1. f(GHz) is the RF channel transmit frequency in GHz.
2. Power and distance are rounded to the nearest mW and mm before calculation.

3. The result is rounded to one decimal place for comparison.
4. When the minimum test separation distance is < 5 mm, a distance of 5 mm is applied to determine SAR test Exclusion.

Standalone SAR estimation:

Mode	Frequency (MHz)	Pavg (dBm)	Pavg (mW)	Distance (mm)	Estimated 1-g (W/kg)
WLAN Head	2462	9.5	8.91	0	0.37
WLAN Body	2462	9.5	8.91	10	0.19
BT Head	2480	5	3.16	0	0.13
BT Body	2480	5	3.16	10	0.07

When standalone SAR test exclusion applies to an antenna that transmits simultaneously with other antennas, the standalone SAR must be estimated according to following to determine simultaneous transmission SAR test exclusion:
[(max. power of channel, including tune-up tolerance , mW)/(min. test separation distance,mm)] · [√f(GHz)/x]
W/kg for test separation distances ≤50 mm;
where x = 7.5 for 1-g SAR.
When the minimum test separation distance is < 5 mm, a distance of 5 mm is applied to determine SAR test Exclusion

SAR test exclusion for the EUT edge considerations Result

Antenna Distance To Edge(mm)						
Mode	**Back**	**Front**	**Left**	**Right**	**Top**	**Bottom**
BT	Exclusion*	Exclusion*	Exclusion*	Exclusion*	Exclusion*	Exclusion*
WLAN	Exclusion*	Exclusion*	Exclusion*	Exclusion*	Exclusion*	Exclusion*
WWAN(GSM/WCDMA)	**Required**	**Required**	**Required**	**Required**	Exclusion	**Required**

Note:

Required: The distance to Edge is less than 25mm, testing is required.
Exclusion*: SAR test exclusion evaluation has been done above.
Exclusion: The distance to Edge is more than 25 mm, testing is not required.

SAR MEASUREMENT RESULTS

This page summarizes the results of the performed dosimetric evaluation.

SAR Test Data

Environmental Conditions

Temperature:	22.5-23.4 ℃	22.2-23.1 ℃
Relative Humidity:	52 %	50 %
ATM Pressure:	100.8 kPa	100.7 kPa
Test Date:	2019/09/19	2019/09/20

Testing was performed by Gaochao Gong, Sam Liang, William Ye.

GSM 850：

EUT Position	Frequency (MHz)	Test Mode	Max Power (dBm)		Scaled Factor	1g SAR (W/kg)		Plot
			Meas.	Rated		Meas.	Rated	
Head Left Cheek	824.2	GSM	/	/	/	/	/	/
	836.6	GSM	31.69	31.9	1.050	0.300	0.32	1#
	848.8	GSM	/	/	/	/	/	/
Head Left Tilt	824.2	GSM	/	/	/	/	/	/
	836.6	GSM	31.69	31.9	1.050	0.138	0.14	2#
	848.8	GSM	/	/	/	/	/	/
Head Right Cheek	824.2	GSM	/	/	/	/	/	/
	836.6	GSM	31.69	31.9	1.050	0.331	**0.35**	**3#**
	848.8	GSM	/	/	/	/	/	/
Head Right Tilt	824.2	GSM	/	/	/	/	/	/
	836.6	GSM	31.69	31.9	1.050	0.150	0.16	4#
	848.8	GSM	/	/	/	/	/	/
Body Worn Back (10mm)	824.2	GSM	/	/	/	/	/	/
	836.6	GSM	31.69	31.9	1.050	0.595	0.62	5#
	848.8	GSM	/	/	/	/	/	/
Body Worn Front (10mm)	824.2	GSM	/	/	/	/	/	/
	836.6	GSM	31.69	31.9	1.050	0.488	0.51	6#
	848.8	GSM	/	/	/	/	/	/
Body Back (10mm)	824.2	GPRS	29.38	29.6	1.052	1.05	**1.10**	**7#**
	836.6	GPRS	29.45	29.6	1.035	1.04	1.08	8#
	848.8	GPRS	29.39	29.6	1.050	1.02	1.07	9#
Body Front (10mm)	824.2	GPRS	29.38	29.6	1.052	0.914	0.96	10#
	836.6	GPRS	29.45	29.6	1.035	0.867	0.90	11#
	848.8	GPRS	29.39	29.6	1.050	0.873	0.92	12#
Body Left (10mm)	824.2	GPRS	/	/	/	/	/	/
	836.6	GPRS	29.45	29.6	1.035	0.437	0.45	13#
	848.8	GPRS	/	/	/	/	/	/
Body Right (10mm)	824.2	GPRS	/	/	/	/	/	/
	836.6	GPRS	29.45	29.6	1.035	0.672	0.70	14#
	848.8	GPRS	/	/	/	/	/	/
Body Bottom (10mm)	824.2	GPRS	/	/	/	/	/	/
	836.6	GPRS	29.45	29.6	1.035	0.114	0.12	15#
	848.8	GPRS	/	/	/	/	/	/

Note:

1. When the 1-g SAR is ≤ 0.8W/Kg, testing for other channels are optional.
2. The EUT transmit and receive through the same GSM antenna while testing SAR.
3. When SAR or MPE is not measured at the maximum power level allowed for production units, the results must be scaled to the maximum tune-up tolerance limit according to the power applied to the individual channels tested to determine compliance.
4. When the maximum output power variation across the required test channels is > 0.5 dB, instead of the middle channel, the highest output power channel must be used.
5. The Multi-slot Classes of EUT is Class 12 which has maximum 4 Downlink slots and 4 Uplink slots, the maximum active slots is 5, when perform the multiple slots scan, 2DL+3UL is the worst case.

PCS 1900：

EUT Position	Frequency (MHz)	Test Mode	Max Power (dBm)		Scaled Factor	1g SAR (W/kg)		Plot
			Meas.	Rated		Meas.	Rated	
Head Left Cheek	1850.2	GSM	/	/	/	/	/	/
	1880	GSM	29.24	29.3	1.014	0.122	0.12	16#
	1909.8	GSM	/	/	/	/	/	/
Head Left Tilt	1850.2	GSM	/	/	/	/	/	/
	1880	GSM	29.24	29.3	1.014	0.110	0.11	17#
	1909.8	GSM	/	/	/	/	/	/
Head Right Cheek	1850.2	GSM	/	/	/	/	/	/
	1880	GSM	29.24	29.3	1.014	0.248	**0.25**	**18#**
	1909.8	GSM	/	/	/	/	/	/
Head Right Tilt	1850.2	GSM	/	/	/	/	/	/
	1880	GSM	29.24	29.3	1.014	0.134	0.14	19#
	1909.8	GSM	/	/	/	/	/	/
Body Worn Back (10mm)	1850.2	GSM	/	/	/	/	/	/
	1880	GSM	29.24	29.3	1.014	0.557	0.56	20#
	1909.8	GSM	/	/	/	/	/	/
Body Worn Front (10mm)	1850.2	GSM	/	/	/	/	/	/
	1880	GSM	29.24	29.3	1.014	0.201	0.20	21#
	1909.8	GSM	/	/	/	/	/	/
Body Back (10mm)	1850.2	GPRS	26.95	27.1	1.035	1.27	**1.31**	**22#**
	1880	GPRS	26.92	27.1	1.042	1.07	1.11	23#
	1909.8	GPRS	26.87	27.1	1.054	0.954	1.01	24#
Body Front (10mm)	1850.2	GPRS	/	/	/	/	/	/
	1880	GPRS	26.92	27.1	1.042	0.466	0.49	25#
	1909.8	GPRS	/	/	/	/	/	/
Body Left (10mm)	1850.2	GPRS	/	/	/	/	/	/
	1880	GPRS	26.92	27.1	1.042	0.115	0.12	26#
	1909.8	GPRS	/	/	/	/	/	/
Body Right (10mm)	1850.2	GPRS	/	/	/	/	/	/
	1880	GPRS	26.92	27.1	1.042	0.595	0.62	27#
	1909.8	GPRS	/	/	/	/	/	/
Body Bottom (10mm)	1850.2	GPRS	/	/	/	/	/	/
	1880	GPRS	26.92	27.1	1.042	0.748	0.78	28#
	1909.8	GPRS	/	/	/	/	/	/

Note:

1. When the 1-g SAR is ≤ 0.8W/Kg, testing for other channels are optional.
2. The EUT transmit and receive through the same GSM antenna while testing SAR.
3. When SAR or MPE is not measured at the maximum power level allowed for production units, the results must be scaled to the maximum tune-up tolerance limit according to the power applied to the individual channels tested to determine compliance.
4. When the maximum output power variation across the required test channels is > 0.5 dB, instead of the middle channel, the highest output power channel must be used.
5. The Multi-slot Classes of EUT is Class 12 which has maximum 4 Downlink slots and 4 Uplink slots, the maximum active slots is 5, when perform the multiple slots scan, 2DL+3UL is the worst case

WCDMA Band 2：

EUT Position	Frequency (MHz)	Test Mode	Max Power (dBm)		Scaled Factor	1g SAR (W/kg)		Plot
			Meas.	Rated		Meas.	Rated	
Head Left Cheek	1852.4	RMC	/	/	/	/	/	/
	1880	RMC	23.35	23.5	1.035	0.210	0.22	29#
	1907.6	RMC	/	/	/	/	/	/
Head Left Tilt	1852.4	RMC	/	/	/	/	/	/
	1880	RMC	23.35	23.5	1.035	0.189	0.20	30#
	1907.6	RMC	/	/	/	/	/	/
Head Right Cheek	1852.4	RMC	/	/	/	/	/	/
	1880	RMC	23.35	23.5	1.035	0.352	**0.36**	**31#**
	1907.6	RMC	/	/	/	/	/	/
Head Right Tilt	1852.4	RMC	/	/	/	/	/	/
	1880	RMC	23.35	23.5	1.035	0.205	0.21	32#
	1907.6	RMC	/	/	/	/	/	/
Body Back (10mm)	1852.4	RMC	23.31	23.5	1.045	0.998	**1.04**	**33#**
	1880	RMC	23.35	23.5	1.035	0.816	0.84	34#
	1907.6	RMC	23.25	23.5	1.059	0.714	0.76	35#
Body Front (10mm)	1852.4	RMC	/	/	/	/	/	/
	1880	RMC	23.35	23.5	1.035	0.264	0.27	36#
	1907.6	RMC	/	/	/	/	/	/
Body Left (10mm)	1852.4	RMC	/	/	/	/	/	/
	1880	RMC	23.35	23.5	1.035	0.075	0.08	37#
	1907.6	RMC	/	/	/	/	/	/
Body Right (10mm)	1852.4	RMC	/	/	/	/	/	/
	1880	RMC	23.35	23.5	1.035	0.392	0.41	38#
	1907.6	RMC	/	/	/	/	/	/
Body Bottom (10mm)	1852.4	RMC	/	/	/	/	/	/
	1880	RMC	23.35	23.5	1.035	0.493	0.51	39#
	1907.6	RMC	/	/	/	/	/	/

WCDMA Band 5：

EUT Position	Frequency (MHz)	Test Mode	Max Power (dBm)		Scaled Factor	1g SAR (W/kg)		Plot
			Meas.	Rated		Meas.	Rated	
Head Left Cheek	826.4	RMC	/	/	/	/	/	/
	836.6	RMC	22.71	22.9	1.045	0.256	0.27	40#
	846.6	RMC	/	/	/	/	/	/
Head Left Tilt	826.4	RMC	/	/	/	/	/	/
	836.6	RMC	22.71	22.9	1.045	0.126	0.13	41#
	846.6	RMC	/	/	/	/	/	/
Head Right Cheek	826.4	RMC	/	/	/	/	/	/
	836.6	RMC	22.71	22.9	1.045	0.315	**0.33**	**42#**
	846.6	RMC	/	/	/	/	/	/
Head Right Tilt	826.4	RMC	/	/	/	/	/	/
	836.6	RMC	22.71	22.9	1.045	0.145	0.15	43#
	846.6	RMC	/	/	/	/	/	/
Body Back (10mm)	826.4	RMC	/	/	/	/	/	/
	836.6	RMC	22.71	22.9	1.045	0.718	**0.75**	**44#**
	846.6	RMC	/	/	/	/	/	/
Body Front (10mm)	826.4	RMC	/	/	/	/	/	/
	836.6	RMC	22.71	22.9	1.045	0.448	0.47	45#
	846.6	RMC	/	/	/	/	/	/
Body Left (10mm)	826.4	RMC	/	/	/	/	/	/
	836.6	RMC	22.71	22.9	1.045	0.245	0.26	46#
	846.6	RMC	/	/	/	/	/	/
Body Right (10mm)	826.4	RMC	/	/	/	/	/	/
	836.6	RMC	22.71	22.9	1.045	0.363	0.38	47#
	846.6	RMC	/	/	/	/	/	/
Body Bottom (10mm)	826.4	RMC	/	/	/	/	/	/
	836.6	RMC	22.71	22.9	1.045	0.099	0.10	48#
	846.6	RMC	/	/	/	/	/	/

Note:

1. When the 1-g SAR is≤ 0.8W/Kg, testing for other channels are optional.
2. The EUT transmit and receive through the same antenna while testing SAR.
3. The default test configuration is to measure SAR with an established radio link between the EUT and a communication test set using a 12.2 kbps RMC (reference measurement Channel) Configured in Test Loop Model.
4. KDB 941225 D01-Body SAR is not required for HSDPA/HSUPA/HSPA+ when the maximum average output of each RF channel is less than ? dB higher than measured 12.2kbps RMC or the maximum SAR for 12.2kbps RMC is < 75% of SAR limit.
5. When SAR or MPE is not measured at the maximum power level allowed for production units, the results must be scaled to the maximum tune-up tolerance limit according to the power applied to the individual channels tested to determine compliance.

SAR Measurement Variability

In accordance with published RF Exposure KDB procedure 865664 D01 SAR measurement 100 MHz to 6 GHz v01. These additional measurements are repeated after the completion of all measurements requiring the same head or body tissue-equivalent medium in a frequency band. The test device should be returned to ambient conditions (normal room temperature) with the battery fully charged before it is re-mounted on the device holder for the repeated measurement(s) to minimize any unexpected variations in the repeated results

1) Repeated measurement is not required when the original highest measured SAR is < 0.80 W/kg; steps 2) through 4) do not apply.
2) When the original highest measured SAR is ≥ 0.80 W/kg, repeat that measurement once.
3) Perform a second repeated measurement only if the ratio of largest to smallest SAR for the original and first repeated measurements is > 1.20 or when the original or repeated measurement is ≥ 1.45 W/kg (~ 10% from the 1-g SAR limit).
4) Perform a third repeated measurement only if the original, first or second repeated measurement is ≥1.5 W/kg and the ratio of largest to smallest SAR for the original, first and second repeated measurements is > 1.20.

Note: The same procedures should be adapted for measurements according to extremity and occupational exposure limits by applying a factor of 2.5 for extremity exposure and a factor of 5 for occupational exposure to the corresponding SAR thresholds.

The Highest Measured SAR Configuration in Each Frequency Band

Head

SAR probe calibration point	Frequency Band	Freq.(MHz)	EUT Position	Meas. SAR (W/kg)		Largest to Smallest SAR Ratio
				Original	Repeated	
/	/	/	/	/	/	/

Body

SAR probe calibration point	Frequency Band	Freq.(MHz)	EUT Position	Meas. SAR (W/kg)		Largest to Smallest SAR Ratio
				Original	Repeated	
750MHz (650~850MHz)	GSM 850	824.2	Body Back	1.05	1.02	**1.03**
1900MHz (1850~2000MHz)	PCS 1900	1850.2	Body Back	1.27	1.25	1.02

Note:

1. Second Repeated Measurement is not required since the ratio of the largest to smallest SAR for the original and first repeated measurement is not > 1.20.
2. The measured SAR results **do not** have to be scaled to the maximum tune-up tolerance to determine if repeated measurements are required.
3. SAR measurement variability must be assessed for each frequency band, which is determined by the **SAR probe calibration point and tissue-equivalent medium** used for the device measurements..

SAR SIMULTANEOUS TRANSMISSION DESCRIPTION

Simultaneous Transmission:

Description of Simultaneous Transmit Capabilities		
Transmitter Combination	**Simultaneous?**	**Hotspot?**
WWAN(GSM/WCDMA) + Bluetooth	√	×
WWAN(GSM/WCDMA) + WLAN 2.4G	√	√
WLAN + Bluetooth	×	×

Simultaneous and Hotspot SAR test exclusion considerations:

Mode(SAR1+SAR2)	Position	Reported SAR(W/kg)		ΣSAR < 1.6W/kg
		SAR1	SAR2	
GSM 850+Bluetooth	Head Left Cheek	0.32	0.13	0.45
	Head Left Tilt	0.14	0.13	0.27
	Head Right Cheek	0.35	0.13	0.48
	Head Right Tilt	0.16	0.13	0.29
	Body Worn Back	0.62	0.07	0.69
	Body Worn Front	0.51	0.07	0.58
	Body Back	1.10	0.07	1.17
	Body Front	0.96	0.07	1.03
PCS1900 +Bluetooth	Head Left Cheek	0.12	0.13	0.25
	Head Left Tilt	0.11	0.13	0.24
	Head Right Cheek	0.25	0.13	0.38
	Head Right Tilt	0.14	0.13	0.27
	Body Worn Back	0.56	0.07	0.63
	Body Worn Front	0.20	0.07	0.27
	Body Back	1.31	0.07	1.38
	Body Front	0.49	0.07	0.56
WCDMA Band 2+Bluetooth	Head Left Cheek	0.22	0.13	0.35
	Head Left Tilt	0.20	0.13	0.33
	Head Right Cheek	0.36	0.13	0.49
	Head Right Tilt	0.21	0.13	0.34
	Body Back	1.04	0.07	1.11
	Body Front	0.27	0.07	0.34
WCDMA Band 5+Bluetooth	Head Left Cheek	0.27	0.13	0.40
	Head Left Tilt	0.13	0.13	0.26
	Head Right Cheek	0.33	0.13	0.46
	Head Right Tilt	0.15	0.13	0.28
	Body Back	0.75	0.07	0.82
	Body Front	0.47	0.07	0.54

Mode(SAR1+SAR2)	Position	Reported SAR(W/kg)		ΣSAR < 1.6W/kg
		SAR1	SAR2	
GSM 850+ WLAN 2.4G	Head Left Cheek	0.32	0.37	0.69
	Head Left Tilt	0.14	0.37	0.51
	Head Right Cheek	0.35	0.37	0.72
	Head Right Tilt	0.16	0.37	0.53
	Body Worn Back	0.62	0.19	0.81
	Body Worn Front	0.51	0.19	0.70
GPRS 850 + WLAN 2.4G (Hotspot)	Body Back	1.10	0.19	1.29
	Body Front	0.96	0.19	1.15
	Body Left	0.45	0.19	0.64
	Body Right	0.70	0.19	0.89
	Body Bottom	0.12	0.19	0.31
PCS1900 + WLAN 2.4G	Head Left Cheek	0.12	0.37	0.49
	Head Left Tilt	0.11	0.37	0.48
	Head Right Cheek	0.25	0.37	0.62
	Head Right Tilt	0.14	0.37	0.51
	Body Worn Back	0.56	0.19	0.75
	Body Worn Front	0.20	0.19	0.39
GPRS 1900 + WLAN 2.4G (Hotspot)	Body Back	1.31	0.19	**1.50**
	Body Front	0.49	0.19	0.68
	Body Left	0.12	0.19	0.31
	Body Right	0.62	0.19	0.81
	Body Bottom	0.78	0.19	0.97
WCDMA Band 2+ WLAN 2.4G	Head Left Cheek	0.22	0.37	0.59
	Head Left Tilt	0.20	0.37	0.57
	Head Right Cheek	0.36	0.37	**0.73**
	Head Right Tilt	0.21	0.37	0.58
WCDMA Band 2+ WLAN 2.4G (Hotspot)	Body Back	1.04	0.19	1.23
	Body Front	0.27	0.19	0.46
	Body Left	0.08	0.19	0.27
	Body Right	0.41	0.19	0.60
	Body Bottom	0.51	0.19	0.70
WCDMA Band 5+ WLAN 2.4G	Head Left Cheek	0.27	0.37	0.64
	Head Left Tilt	0.13	0.37	0.50
	Head Right Cheek	0.33	0.37	0.70
	Head Right Tilt	0.15	0.37	0.52
WCDMA Band 5+ WLAN 2.4G (Hotspot)	Body Back	0.75	0.19	0.94
	Body Front	0.47	0.19	0.66
	Body Left	0.26	0.19	0.45
	Body Right	0.38	0.19	0.57
	Body Bottom	0.10	0.19	0.29

Note:

1. Hotspot mode SAR is measured for all edges and surfaces of the device with a transmitting antenna located within 25 mm from that surface or edge; for the data modes, wireless technologies and frequency bands supporting hotspot mode.
2. Hotspot Mode is not feasible during voice calls.

Conclusion:

Sum of SAR: **ΣSAR ≤ 1.6 W/kg,** therefore simultaneous transmission SAR with Volume Scans is **not required**.

SAR Plots

Please Refer to the Attachment.

APPENDIX A MEASUREMENT UNCERTAINTY

The uncertainty budget has been determined for the measurement system and is given in the following Table.

Measurement uncertainty evaluation for IEEE1528-2013 SAR test

Source of uncertainty	Tolerance/ uncertainty ± %	Probability distribution	Divisor	ci (1 g)	ci (10 g)	Standard uncertainty ± %, (1 g)	Standard uncertainty ± %, (10 g)
Measurement system							
Probe calibration	6.55	N	1	1	1	6.6	6.6
Axial Isotropy	4.7	R	√3	1	1	2.7	2.7
Hemispherical Isotropy	9.6	R	√3	0	0	0.0	0.0
Boundary effect	1.0	R	√3	1	1	0.6	0.6
Linearity	4.7	R	√3	1	1	2.7	2.7
Detection limits	1.0	R	√3	1	1	0.6	0.6
Readout electronics	0.3	N	1	1	1	0.3	0.3
Response time	0.0	R	√3	1	1	0.0	0.0
Integration time	0.0	R	√3	1	1	0.0	0.0
RF ambient conditions – noise	1.0	R	√3	1	1	0.6	0.6
RF ambient conditions–reflections	1.0	R	√3	1	1	0.6	0.6
Probe positioner mech. Restrictions	0.8	R	√3	1	1	0.5	0.5
Probe positioning with respect to phantom shell	6.7	R	√3	1	1	3.9	3.9
Post-processing	2.0	R	√3	1	1	1.2	1.2
Test sample related							
Test sample positioning	2.8	N	1	1	1	2.8	2.8
Device holder uncertainty	6.3	N	1	1	1	6.3	6.3
Drift of output power	5.0	R	√3	1	1	2.9	2.9
Phantom and set-up							
Phantom uncertainty (shape and thickness tolerances)	4.0	R	√3	1	1	2.3	2.3
Liquid conductivity target)	5.0	R	√3	0.64	0.43	1.8	1.2
Liquid conductivity meas.)	2.5	N	1	0.64	0.43	1.6	1.1
Liquid permittivity target)	5.0	R	√3	0.6	0.49	1.7	1.4
Liquid permittivity meas.)	2.5	N	1	0.6	0.49	1.5	1.2
Combined standard uncertainty		RSS				12.2	12.0
Expanded uncertainty 95 % confidence interval)						24.3	23.9

Measurement uncertainty evaluation for IEC62209-2 SAR test

Source of uncertainty	Tolerance/ uncertainty ± %	Probability distribution	Divisor	ci (1 g)	ci (10 g)	Standard uncertainty ± %, (1 g)	Standard uncertainty ± %, (10 g)
Measurement system							
Probe calibration	6.55	N	1	1	1	6.6	6.6
Axial Isotropy	4.7	R	√3	1	1	2.7	2.7
Hemispherical Isotropy	9.6	R	√3	0	0	0.0	0.0
Linearity	4.7	R	√3	1	1	2.7	2.7
Modulation Response	0.0	R	√3	1	1	0.0	0.0
Detection limits	1.0	R	√3	1	1	0.6	0.6
Boundary effect	1.0	R	√3	1	1	0.6	0.6
Readout electronics	0.3	N	1	1	1	0.3	0.3
Response time	0.0	R	√3	1	1	0.0	0.0
Integration time	0.0	R	√3	1	1	0.0	0.0
RF ambient conditions – noise	1.0	R	√3	1	1	0.6	0.6
RF ambient conditions–reflections	1.0	R	√3	1	1	0.6	0.6
Probe positioner mech. Restrictions	0.8	R	√3	1	1	0.5	0.5
Probe positioning with respect to phantom shell	6.7	R	√3	1	1	3.9	3.9
Post-processing	2.0	R	√3	1	1	1.2	1.2
Test sample related							
Device holder Uncertainty	6.3	N	1	1	1	6.3	6.3
Test sample positioning	2.8	N	1	1	1	2.8	2.8
Power scaling	4.5	R	√3	1	1	2.6	2.6
Drift of output power	5.0	R	√3	1	1	2.9	2.9
Phantom and set-up							
Phantom uncertainty (shape and thickness tolerances)	4.0	R	√3	1	1	2.3	2.3
Algorithm for correcting SAR for deviations in permittivity and conductivity	1.9	N	1	1	0.84	1.1	0.9
Liquid conductivity (meas.)	2.5	N	1	0.64	0.43	1.6	1.1
Liquid permittivity (meas.)	2.5	N	1	0.6	0.49	1.5	1.2
Temp. unc. - Conductivity	1.7	R	√3	0.78	0.71	0.8	0.7
Temp. unc. - Permittivity	0.3	R	√3	0.23	0.26	0.0	0.0
Combined standard uncertainty		RSS				12.2	12.1
Expanded uncertainty 95 % confidence interval)						24.5	24.2

APPENDIX B EUT TEST POSITION PHOTOS

Please Refer to the Attachment.

APPENDIX C CALIBRATION CERTIFICATES

Please Refer to the Attachment.

Directions

1. The information marked # is provided by the applicant, the laboratory is not responsible for its authenticity and this information can affect the validity of the result in the test report.
2. Unless otherwise stated the results shown in this test report refer only to the sample(s) tested.
3. Otherwise required by the applicant or Product Regulations, Decision Rule in this report did not consider the uncertainty.
4. The extended uncertainty given in this report is obtained by combining the standard uncertainty times the coverage factor K with the 95% confidence interval.
5. This report cannot be reproduced except in full, without prior written approval of the Company.
6. This report is valid only with a valid digital signature. The digital signature may be available only under the Adobe software above version 7.0.
7. This report must not be used by the customer to claim product certification, approval, or endorsement by A2LA, or any agency of the U.S. Government.
8. This report may contain data that are not covered by the accreditation scope and shall be marked with an asterisk "★".

******* END OF REPORT *******