Pixie Tag
User Manual

Works with
Apple Find My

EN Onvis Pixie Tag Overview

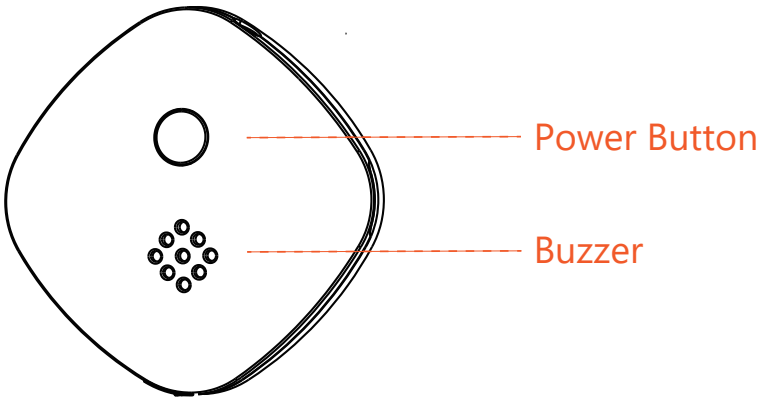

Single press: broadcast SN & play ‘beep beep’
Double press: Play current sound; Change sound(double press again within 3 seconds)
Triple press: Disable (single or double press will enable the tracker again)
Long press: Reset

Features

- Bluetooth 5.3 item tracker(iOS only)
- 3 Years battery life
- Replaceable battery
- IP67 water proof
- 100dB sound
- Multiple sound options
- Enable/Disable
- Unwanted Tracking alert

QUICK START GUIDE

1. Make sure the Bluetooth of your iOS device is on.
2. Reset the tag by long pressing the button for 10 seconds until a sound is played.
3. Launch the Find My app, tap **+**, then tap **Add Other Item**. The Find My app will search for the available Find My tag.
4. After the Pixie Tag is found, name it and assign an emoji to it.
5. Download the Free Onvis Home app to upgrade firmware and check battery level.

Specifications

Wireless connection: Bluetooth Low Energy 5.3

Bluetooth range: Up to 61m (200 ft)

Buzzer: Up to 100db

Operating temperature: 14 ℉ ~113 ℉ (-10 ℃ ~45 ℃)

Operating humidity: 5%~95% RH

Dimensions(L×W×H): 3.54*1.49*0.84 inch / 90*38*21.4mm

Color: Black / White

Battery: CR2430 Button cell Battery (Replaceable)

Battery Life: Up to 3 years.

Usage: Indoor and outdoor use

FAQ

1. Why the Find My app could not find my Onvis Pixie Tag?

① Make sure bluetooth is enabled in your iOS device.

② Make sure your Pixie Tag is within bluetooth range of your iOS device.

③ Before set up, reset the device by long pressing the button for about 10 seconds.

④ The pairing broadcast will stop in 5 minutes. To pair after 5 minutes, reset again.

2. Cannot reach my tag within bluetooth range.

① Please check the battery level. Make sure the battery level is not lower than 5%.

② If the tag is disabled, single or double press to wake it up.

③ Please make sure the bluetooth signal is not blocked by walls or other obstacles.

3. Firmware Update.

① Launch the Onvis Home app and tap the Pixie Tag device icon.

② Compare the latest firmware online and the current firmware.

③ Following the prompts, tap to upgrade the Pixie Tag.

Battery Replacement

1. Use your fingernail or insert a small tool into the gap to open the batter cover.

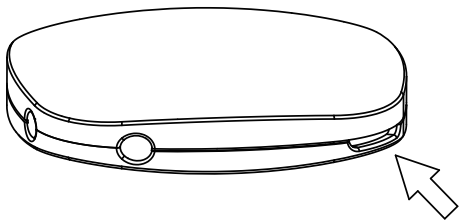

2. Replace the battery with a new one, make sure the positive terminal is facing up

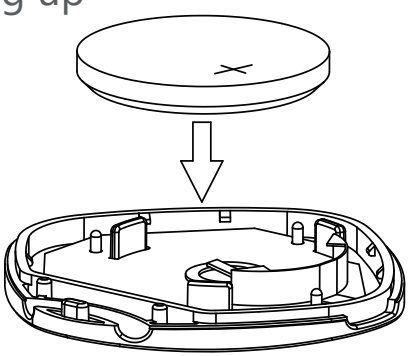

3. Close the battery cover by aligning the hole.

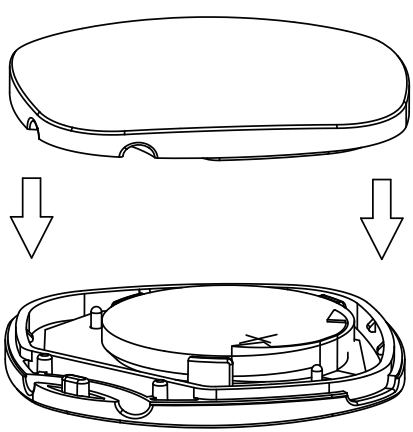

Legal

- Use of the Works with Apple badge means that a product has been designed to work specifically with the technology identified in the badge and has been certified by the product manufacturer to meet Apple Find My network product specifications and requirements. Apple is not responsible for the operation of this device or use of this product or its compliance with safety and regulatory standards.
- Apple, Apple Watch, iPad, iPadOS, iPod touch, Mac, and macOS are trademarks of Apple Inc., registered in the U.S. and other countries. The trademark “iPhone” is used with a license from Aiphone K.K.
- To use the Apple Find My app to locate this item, the latest version of iOS, iPadOS, or macOS is recommended.

Conformity Declarations

Shenzhen Champon Technology Co., Ltd here by declares that this product meets basic requirements and other relevant obligation as set forth in the following guidelines:

2014/35/EU low voltage Directive (replace 2006/95/EC)

2014/30/EU EMC Directive

2014/53/EU Radio Equipment Directive [RED]

2011/65/EU, (EU) 2015/863 RoHS 2 Directive

For a copy of the Conformity Declaration, visit: www.onvistech.com

This product is approved for use in European Union.

FCC Compliance Statement

This device complies with part 15 of the FCC Rules. Operation is subject to the following two conditions:

(1) This device may not cause harmful interference.

(2) This device must accept any interference received, including interference that may cause undesired operation.

Any changes or modifications not expressly approved by the party responsible for compliance could void the user's authority to operate the equipment.

NOTE: This equipment has been tested and found to comply with the limits for a Class B digital device, pursuant to Part 15 of the FCC Rules. These limits are designed to provide reasonable protection against harmful interference in a residential installation. This equipment generates, uses and can radiate radio frequency energy and, if not installed and used in accordance with the instructions, may cause harmful interference to radio communications. However, there is no guarantee that interference will not occur in a particular installation.

If this equipment does cause harmful interference to radio or television reception, which can be determined by turning the equipment off and on, the user is encouraged to try to correct the interference by one or more of the following measures:

-- Reorient or relocate the receiving antenna.

-- Increase the separation between the equipment and receiver.

-- Connect the equipment into an outlet on a circuit different from that to which the receiver is connected.

-- Consult the dealer or an experienced radio/TV technician for help.

The device has been evaluated to meet general RF exposure requirement. The device can be used in portable exposure condition without restriction.

IC Caution:

This device complies with Industry Canada licence-exempt RSS standard(s). Operation is subject to the following two conditions:

(1) This device may not cause interference, and

(2) This device must accept any interference, including interference that may cause undesired operation of the device.

The device has been evaluated to meet general RF exposure requirement. The device can be used in portable exposure condition without restriction.

Le présent appareil est conforme aux CNR d' Industrie Canada applicables aux appareils radio exempts de licence. L'exploitation est autorisée aux deux conditions suivantes:

(1) l'appareil ne doit pas produire de brouillage, et

(2) l' utilisateur de l'appareil doit accepter tout brouillage radioélectrique subi, même si le brouillage est susceptible d'en compromettre le fonctionnement.

Le matériel a été évalué pour répondre aux exigences générales d’exposition aux radiofréquences. Le dispositif peut être utilisé dans des conditions d ‘exposition portables illimitées.

WEEE Directive Compliance

This symbol indicates that it is unlawful to dispose of this product together with other household waste. Please take it to a local recycling center for used equipment.

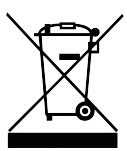

Model	Pixie Tag	Country of Origin	Made in China
Production Batch No.	QR-PMC-202400?		
Manufacturer	Shenzhen ChampOn Technology Co., Ltd. 1A-1004, International Innovation Valley, Dashi 1st Road, Xili, Nanshan, Shenzhen, China 518055 support@onvistech.com		
	• **INGESTION HAZARD**: This product contains a button cell or coin battery. • **DEATH** or serious injury can occur if ingested. • A swallowed button cell or coin battery can cause **internal Chemical Burns** in as little as **2 hours**. • **KEEP** new and used batteries **OUT OF REACH of CHILDREN** • **Seek immediate medical attention** if a battery is suspected to beswallowed or inserted inside any part of the body.		
EC REP OST_EU_20210308000015	**eVatmaster Consulting GmbH** **Bettinastr. 30** **60325 Frankfurt am Main,Germany** **contact@evatmaster.com**		
UK REP OST_UK_20210309000001	**EVATOST CONSULTING LTD** **Office 101 32 Threadneedle Street, London, United Kingdom, EC2R 8AY** **contact@evatost.com**		
RoHS FC IC UK CA R 219-229314			

www.onvistech.com

support@onvistech.com

Facebook

Instagram

12-month warranty

Lifetime technical support