Smart Touch Light Switch

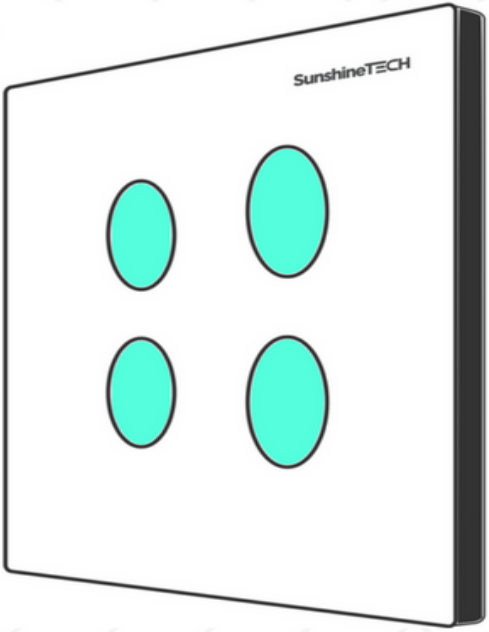

User Manual

Smart Touch Light Switch

Sunshine Tech

I. Introduction

1. Product info and user terms.

- Thank you for using product of **Smart Touch Light Switch**. This product and its all belongs are one of many product lines of Sunshine-Tech Commercial Investment John Stock Company, a subsidiary of Sunshine group.
- Please read this user guide before use to have a proper use of device.
- **Smart Touch Light Switch**, in short **named product**, is a one of many product lines owned by Sunshine Tech. Copyrights and trademark of product are fully and legally owned by Sunshine Tech.
- Users may not copy any or all of this material without the prior written consent of Sunshine Tech. Any unauthorized use of this material including content, logos, trademarks will be subject to legal prosecution. NOTE: For more information, please visit website at http://sunshinetech.vn/smarthome/sunshine-tech-touch

2. Product picture

II. Functions

Picture of application for Smart Touch Light Switch

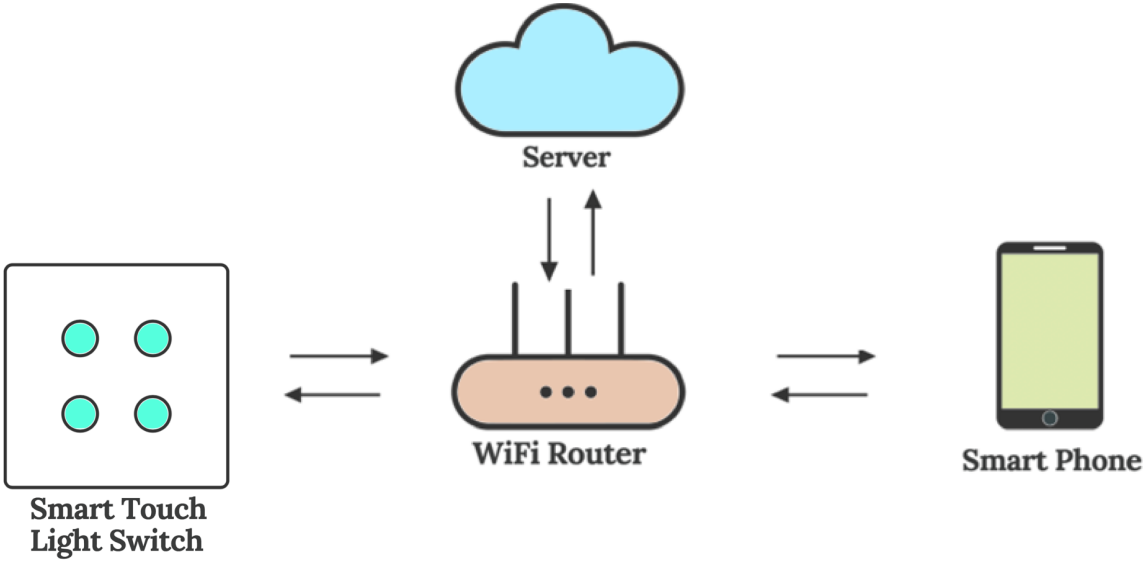

Product's Functionalities:

- **Smart Touch Light Switch** is a smart switch that controls the devices in the home through smart phones and/or computers wherever you are, as long as there is an internet connection.
- Can be controlled directly and physically at home. Using the touch switch will provide a comfortable feeling when you press the switch.
- Fast and accurate response, high security, and safety.
- It is possible to control the device via voice at HomePod smart speaker, which is built into the application on smart phones to control the devices.

III. Specifications

The table below describes the specifications of the Smart Touch Light Switch

Table 1. Table of Device specifications

Specification	Specification
Power Supply	100-240V AC, 50/60Hz
Device's Power consumption	< 0.3W
Number of control outputs	4
Maximum load current	5 Amperes
Dimension	85mm x 78.6mm x 28mm (L x W x H)
Control Protocols	WiFi 802.11 b/g/n, Bluetooth V4.2
Frequency	2.4 ~ 2.5 GHz
Type of antenna	Antenna PCB
Operation Temperature	−10°C ~ 65°C

Dimension

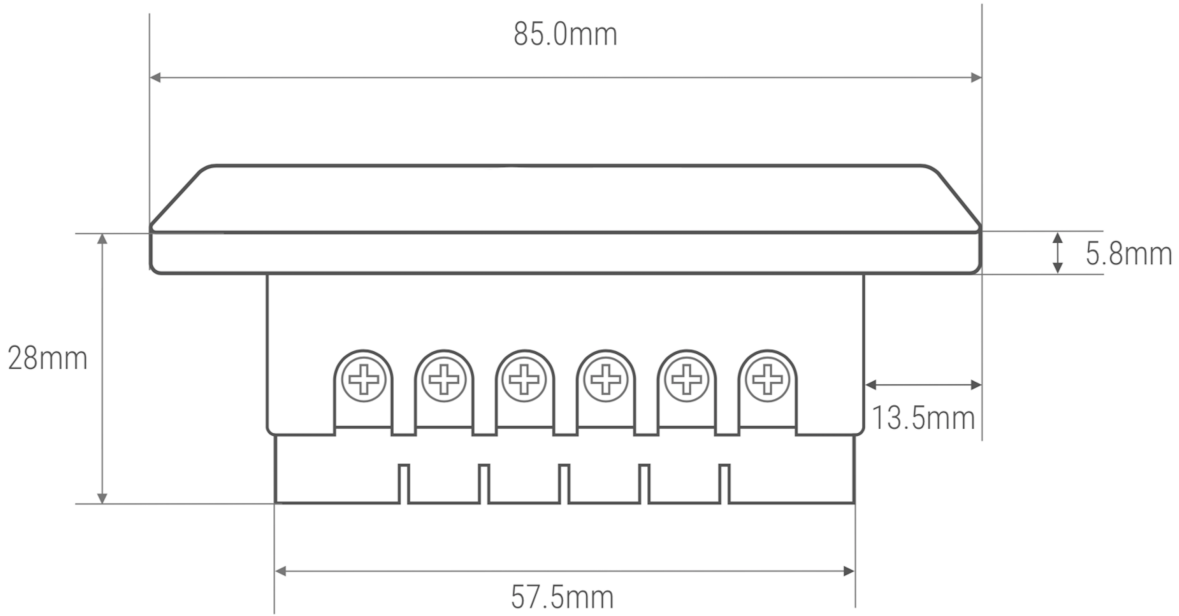

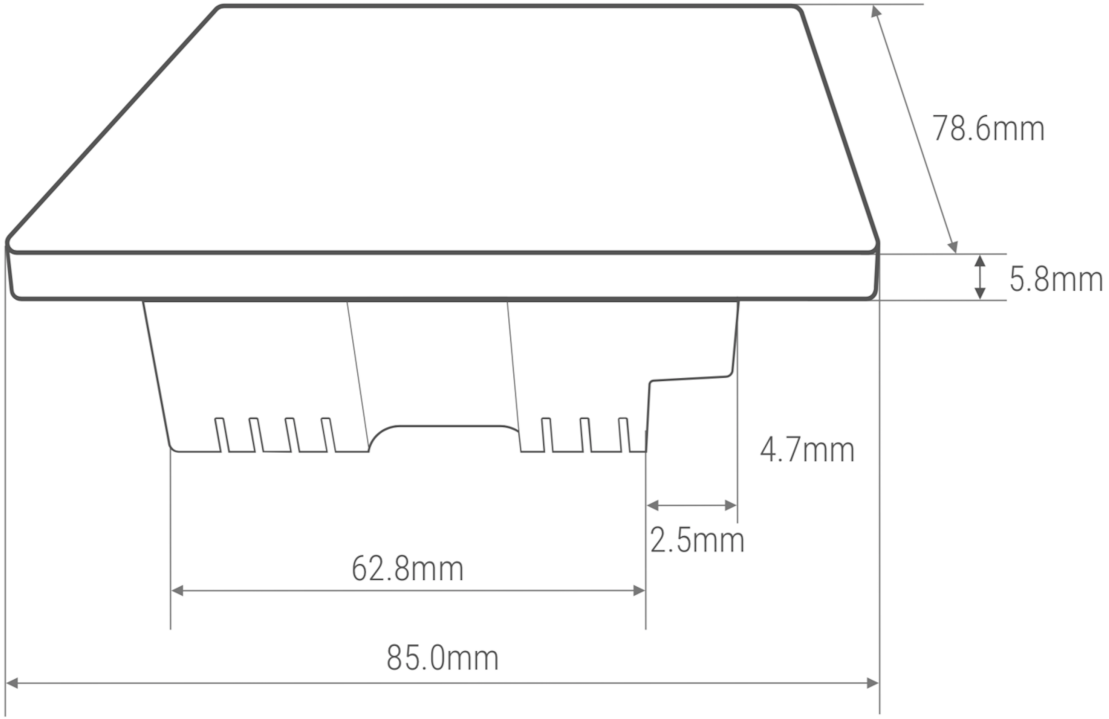
78.6mm
5.8mm
4.7mm
2.5mm
62.8mm
85.0mm

IV. Smart phone appliation

- To fully use features of this device, users please download the application **Smart Touch Light Switch App** on your own smart phone.
- The application is provided on both platforms, which are iOS and Android operating systems.
- Users can visit the website http://sunshinetech.vn/smarthome/sunshine-tech-touch-app to install application online.

V. Installation guide

1. Device installation

Notices before use

	Contents
	Be sure to disconnect the power before installing the device
	The supply voltage for the product is AC 220VAC, 50Hz ~ 60Hz. The electrical wirings should be installed by qualified electricians.
	Qualified and branded loads should be used. The use of poor quality ones can reduce the performance of this device.

	Contents
	The generation of electricity sparks can damage the device, so it is recommmended that when using the power connector, the connecting wires of one position are not exposed to another.
	Don’t use product under environment with high temperature and humidity.

Picture describing the structure and installation of the device.

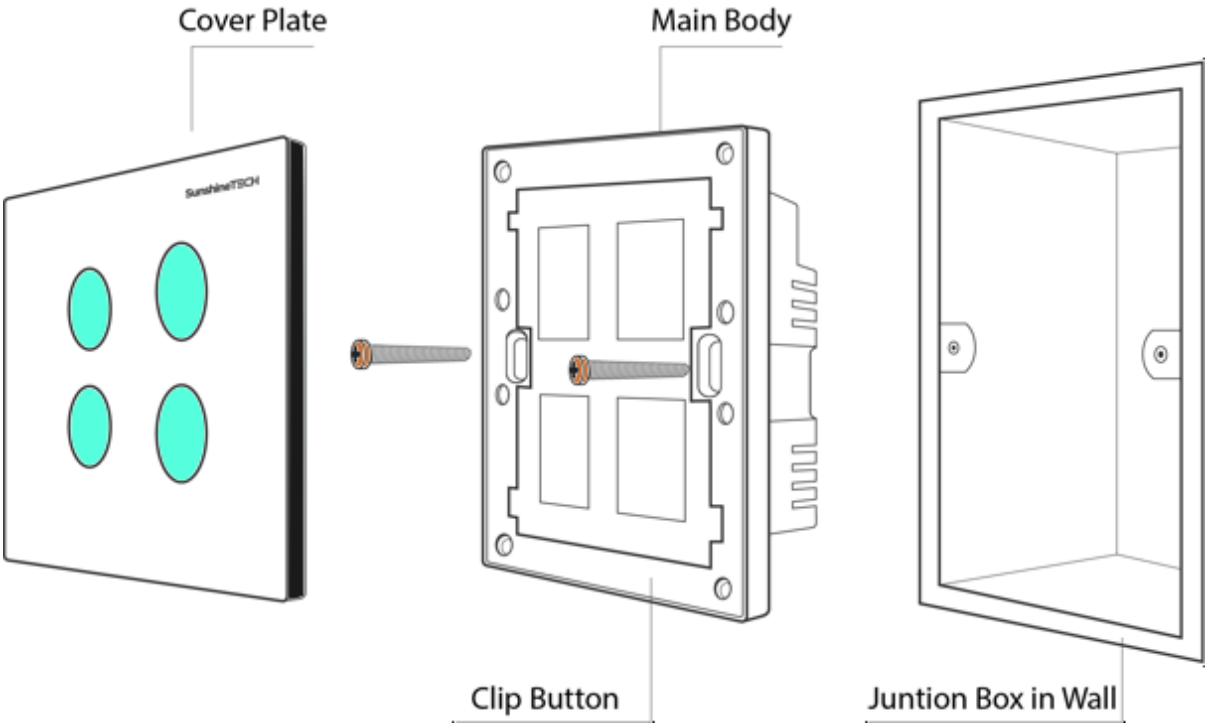

Processing steps

Diagram of wiring connection

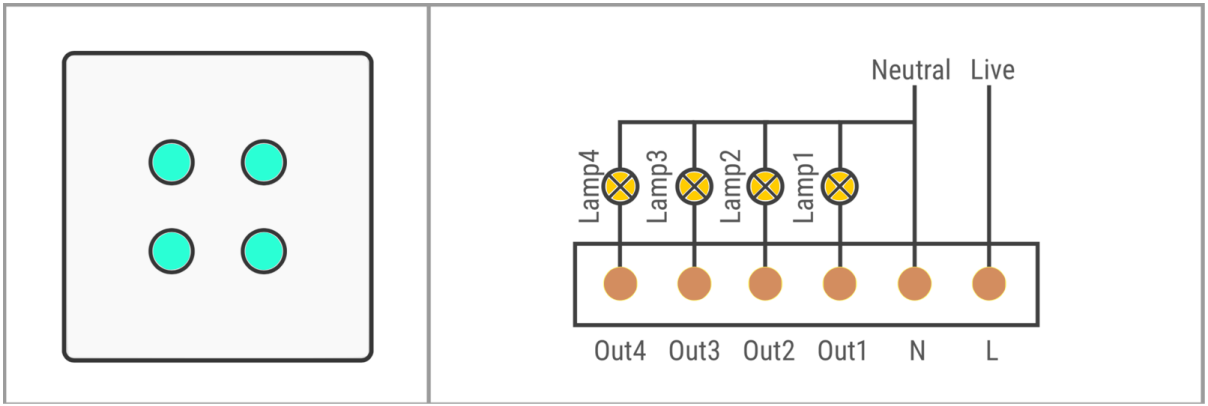

Step 1: Power Supply for Smart Touch Light Switch

- Connect the L (Live) wire of the AC power to the L pin of the Smart Touch Light Switch.
- Connect the N (Neutral) wire of the AC power to the N(pin 2 from the right as shown above) of the Smart Touch Light Switch.

Step 2: Connect to the control device

- Connect the two wires of device 1 (control device) to pins OUT1 and N of Smart Touch Light Switch.
- Connect the 2 wires of device 2 (control device) to pins OUT2 and N of Smart Touch Light Switch.
- Connect the 2 wires of device 3 (control device) to pins OUT3 and N of Smart Touch Light Switch.
- Connect the 2 wires of device 4 (control device) to the OUT4 and N pins of the Smart Touch Light Switch.

This is a product with 4 control outputs, so it is recommended to use only 4 devices (Example: One output should only control air conditioner or fan, or lamp,. ..)

If any problems occurred during installation, please do not disassemble the components.

VI. Order information

Smart Touch Light Switch

- Information on **Smart Touch Light Switch** Type 4 switches. http://sunshinetech.vn/smarthome/smart-touch-light-switch/4switchs
    - Product name: Smart Touch Light Switch WT1-4
    - Part Number : STTWT1-4

Other products

- Some other versions of the Smart Touch Light Switch http://sunshinetech.vn/smarthome/smart-touch-light-switchh
- Some other products used in smart home http://sunshinetech.vn/smarthome

FCC Statement

Any Changes or modifications not expressly approved by the party responsible for compliance could void the user's authority to operate the equipment.

This device complies with part 15 of the FCC Rules. Operation is subject to the following two conditions:

(1) This device may not cause harmful interference, and

(2) This device must accept any interference received, including interference that may cause undesired operation.

FCC Radiation Exposure Statement:

This equipment complies with FCC radiation exposure limits set forth for an uncontrolled environment .This equipment should be installed and operated with minimum distance 20cm between the radiator& your body.

Note: This equipment has been tested and found to comply with the limits for a Class B digital device, pursuant to part 15 of the FCC Rules. These limits are designed to provide reasonable protection against harmful interference in a residential installation. This equipment generates uses and can radiate radio frequency energy and, if not installed and used in accordance with the instructions, may cause harmful interference to radio communications. However,there is no guarantee that interference will not occur in a particular installation. If this equipment does cause harmful interference to radio or television reception, which can be determined by turning the equipment off and on, the user is encouraged to try to correct the interference by one or more of the following measures:

—Reorient or relocate the receiving antenna.

—Increase the separation between the equipment and receiver.

—Connect the equipment into an outlet on a circuit different from that to which the receiver is connected.

—Consult the dealer or an experienced radio/TV technician for help.