Pimax Crystal

User Guide

Contents

1. In the Box 01
2. Important Health & Safety Notes 02
3. Operation Guide 03
   3.1. Product Details （in box) ..... .
   3.2. PCVR ..... .
      3.2.1. PCVR Performance Requirements ..... .
      3.2.2. Switching to PCVR Mode ..... .
      3.2.3. How to Download and Use The PIMAX PC CLIENT 04
      3.2.4. Installing & Replacing the Battery 05
      3.2.5. Product Details (PCVR) 06
      3.2.6. Controller Functionality and Controls 07
      3.2.7. How to Connect and Turn on the Headset 08
      3.2.8. New Controller Pairing (Left and Right Controller Need to be Paired Separately) 09
      3.2.9. How to Adjust the Headset for a Comfortable Fit and View 10
      3.2.10. Firmware Updates 11
   3.3. Standalone VR 12
      3.3.1. Standalone VR System Specifications (Differs from PcVR mode) ..... .
      3.3.2. 6 Degrees of Freedom VR ..... .
      3.3.3. Switching to Standalone VR mode 13
      3.3.4. Powering on the Controllers ..... .
      3.3.5. Powering on the VR Headset. 14
      3.3.6. How to Adjust the Headset for a Comfortable Fit and View 15
      3.3.7. Product Details (Standalone VR) 16
      3.3.8. Operating Instructions ..... .
      3.3.9. Firmware Updates 17
4. Parts Replacement 18
   4.1. Lens replacement ..... .
   4.2. Faceplate replacement ..... .
   4.3. Earphone replacement 19
5. Clean/Care Headset 20
6. Supervision ..... .
7. Safety Warnings 21
8. Battery safety 22
9. Warranty Regulations 23

1. In The Box

Crystal Standard SKU	Crystal	1	Crystal HMD with original cover and 35PPD lens installed
	Controller	1	Functions with the Standard Faceplate and MR Faceplate
	5M DP Cable	1	For Direct connection between HMD and PC
	Charging Sheath	1	Used to Charge Batteries without the HMD
	Rechargeable battery	2	6000mAh capacity per battery. Batteries are removable and swappable.
	42PPD Lens	2	Second set of lenses, tighter FOV but higher clarity. Made of Glass.
	Type-c Cable	2	For Charging the Controllers or the Charging Sheath
	Screwdriver+screw	1	Matches the screws used to secure the lenses to the HMD. Used to Change Lenses
	After-sales service card	1	An after sales service card……what else do you want to know about it?

CAUTION READ CAREFULLY

There is no power block included in the package with this device. If a power block is required, a power block or adapter with accepts a USB Type C cable and provides (5V3A/9V2A) meeting your local certification requirements should be purchased to ensure functionality and longevity of the device and batteries.

2. Important Health & Safety Notes

- This Product Is Designed And Intended To Be Used In An Open And Safe Indoor Area, Free Of Any Tripping Or Slipping Hazards. To Avoid Accidents, Remain Conscious To The Potential Confines Of Your Physical Area And Respect The Boundary Of Your Virtual Area Whenever You See It. Be Sure To Wear The Lanyards When Using The Controllers. Make Sure That There Is Enough Space Around Your Head And Body (At Least 2 Meters By 2 Meters) To Stretch Your Arms To Avoid Damage Or Injury To Yourself, Others, And Your Surroundings.

- This Product Is Not Recommended For Children Aged 12 And Under. It Is Recommended To Keep Headsets, Controllers And Accessories Out Of The Reach Of Children. Teenagers Aged 13 And Over Must Use It Under Adult Supervision To Avoid Accidents.

- Do Not Expose The Optical Lenses To Direct Sunlight Or Other Strong Light Sources. Exposure To Direct Sunlight May Cause Permanent Yellow Spot Damage On The Screen. **Screen Damage Caused By Sunlight Exposure Or Other Strong Sources Of Light Is Not Covered By The Warranty.**

- This Product Is Designed To Accommodate Most Prescription Glasses. Make Sure To Wear The VR Headset In A Manner In Which The VR Headset Lenses Do Not Rub Against Or Impair Your Prescription Lenses. If Your Prescription Lenses Do Not Fit, Contacts Can Also Be Worn Inside The Device.

- This Product Supports Both Manual And Auto IPD Adjustments. Please Pay Great Attention When Manually Adjusting The IPD. When Set To The Minimum IPD The Sides Of The Lens Barrel May Touch The Bridge Of The Nose. This Is Normal. Please Note That Using An Inappropriate IPD May Increase The Risk Of Discomfort.

- Prolonged Use May Cause Dizziness Or Eye Fatigue. Eye Strain Caused By Prolonged Use Will Typically Subside As You Become Accustomed To Wearing The Headset Over Multiple Sessions. We Recommend Occasional Breaks To Allow Your Eyes To Properly Rest. In The Majority Of Cases This Will Relieve Your Eye Fatigue. If You Feel Any Discomfort, Stop Using The Product Immediately. If The Discomfort Persists, Seek Medical Advice.

- Our Product And Packaging Are Updated Regularly, And The Functions And Contents Of The Standalone Headset Mode May Be Upgraded In The Future. Therefore, The Content, Appearance And Functionality Listed In This Manual And Product Packaging Are Subject To Change And May Not Reflect The Final Product. These Instructions Are For Reference Only.

3. Operation Guide

3.1. Product Details (In Box)

- Pimax Crystal
- Controllers
- Battery
- Charging Sheath
- 5M DP Cable
- 42PPD Lenses

3.2. PC VR

3.2.1. PCVR Performance Requirements

GPU	NVIDIA®GeForce RTX 2080 and above
CPU	Intel® Core™ i5-12500/ AMD Ryzen™ 7 3700X and above（Avoid using CPU with integrated GPU）
RAM	16GB and above

For more detailed system requirements, please refer to the official website：https://pimax.com/crystal/

3.2.2. Switching To PCVR Mode

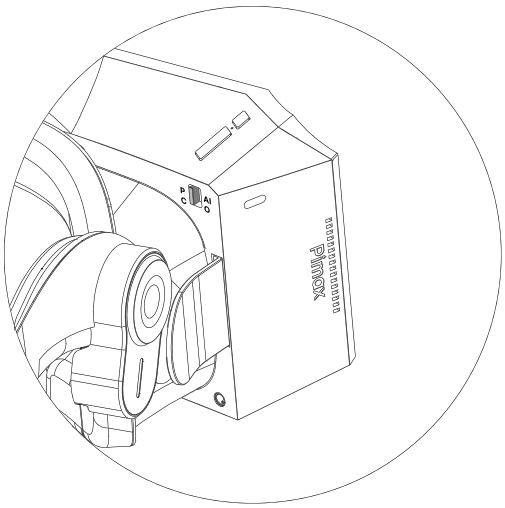

※ If you switch modes while the headset is on, the headset will restart automatically. This is normal.

3.2.3. How To Download And Use The PIMAX PC CLIENT

Step 1: Confirm That SteamVR Has Been Installed

Step 2: Download And Install The PIMAX CLIENT

PIMAX CLIENT is a tool necessary for your PIMAX headset to connect to a Windows 10/11 computer:

https://pimax.com/pimax-pc/

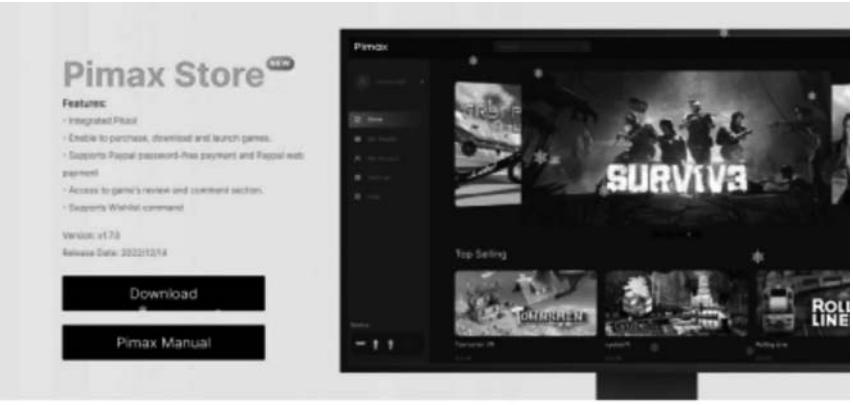

Step 3: Register And Log In To The PIMAX CLIENT

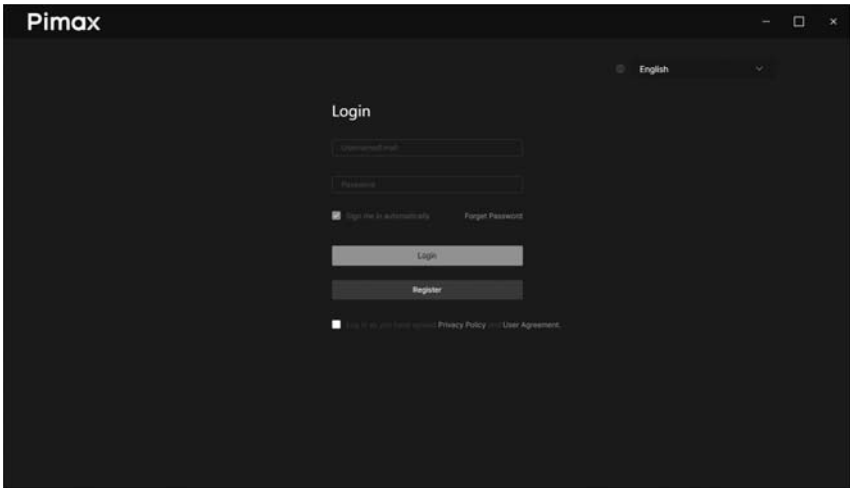

3.2.4. Installing And Replacing The Battery

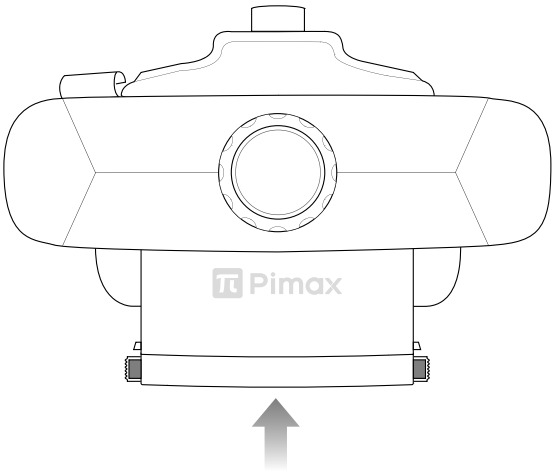

※ When installing the battery, it is necessary to confirm that the clips have properly engaged with the locking mechanism. This prevents the battery from falling out. To remove the battery grip both depressable clips tightly and gently pull the battery from the casing.

3.2.5. Product Details (PCVR)

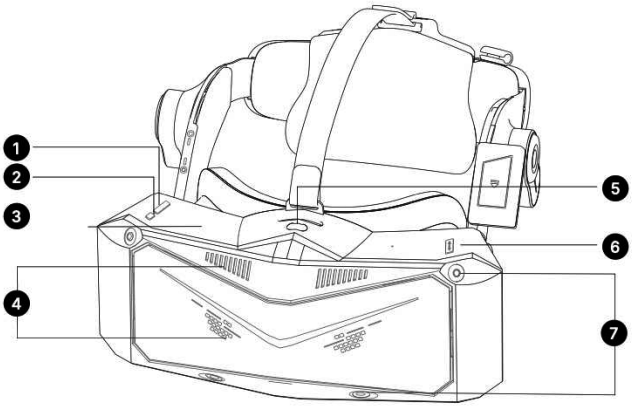

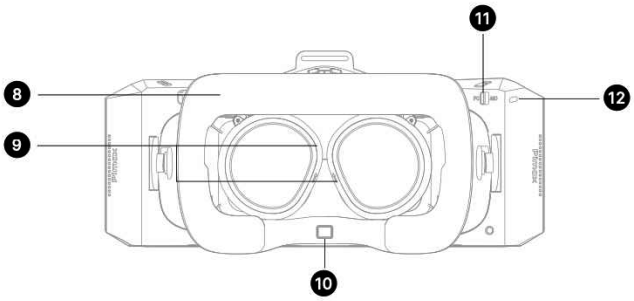

01. Power Button

02. Status Indicator

03. Power Button

Power on: press and hold for 2 seconds
Shutdown: press and hold for 5 seconds
Restart: press and hold for 10 seconds
Sleep mode: Short press in power-on state

04. Vents

05. Mini-Hdmi I/O

For connecting wireless modules

06. Interpupulary Distance Adjustment Button

07. Tracking Camera

Do not block cameras when the headset is in use.

08. Removable Foam Facial Interface

09. Eye Tracking Camera

Do not block cameras when the headset is in use.

10. Proximity Sensor

The system wakes up when the VR headset is put on and sleeps when VR headset is taken off.

11. PC/AIO Switch

12. Side TYPE-C I/O

Used for charging the headset and data transmission

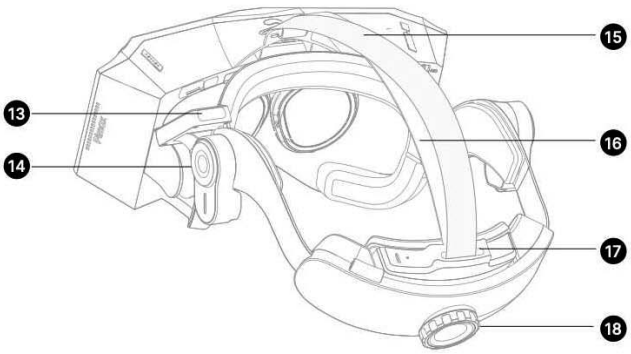

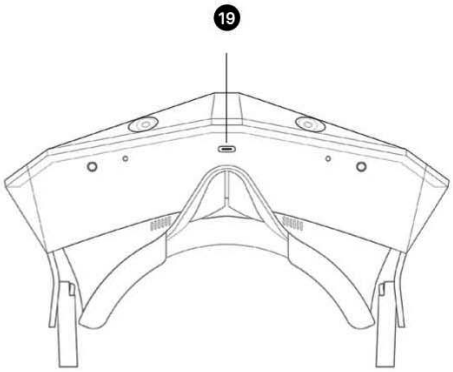

13. Proximity Sensor

A more convenient way to connect DP cable. This extension can be forgone in favor of a direct connection if the user prefers.

14. Left/Right Loudspeaker

Replaceable DMAS earphones

15. Power Cable

※Warning: Do not bend, punch or drag the cable. Cable damage can cause a variety of issues.

16. Top Strap

Used to adjust the pressure applied to the top of the head.

17. Battery Sheath

18. Strap Dial

19. Bottom TYPE-C I/O

Used to connect accessories such as hand and gesture tracking modules.

VR Headset Status Indicator Legend

- ○ Off: Sleeping/Powered off/interrupt
- ☼ White flashing: the headset is turning on (the light will turn off after 3s)
- ● Blue: Charging (Connect the DP cable)
- ● Yellow: Replace the battery (It will turn off after replacement or after shutdown)
- ● Red: Low power
- ○ White: Charging completed

3.2.6. Controller Functionality And Controls

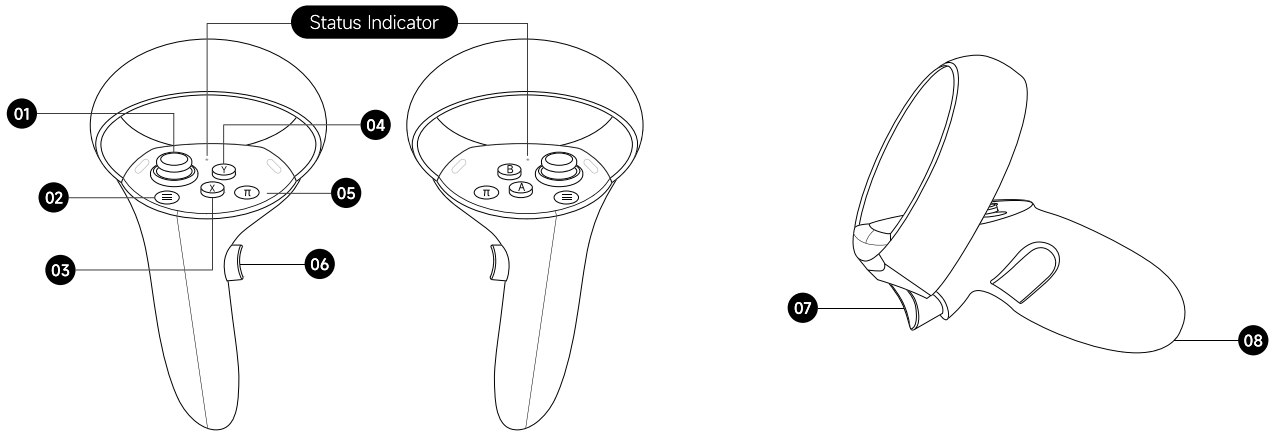

01. Joystick

Push: Turn pages
Press down: The same as Trigger

02. Menu

03. X/A Button

Click: Confirm

04. Y/B Button

Click: Back

05. Π Button

Long press(6s):
Reset/initialization of the controller.
After reset, the controller will vibrate once, and the vibration duration is 2s

Short press(1s):
Turn on/wake up the controller. At the same time, the controller vibrates continuously for 2 times, each time lasting for 0.5s

06. Grip

Hold: Grab

07. Trigger

Click: The same as the A button. Confirm

08. TYPE-C I/O

Controller charging I/O

Controller Status Indicator Legend

- Off: Connected or Powered off
- Red flashing: Charging
- Blue flashing: Searching for connection
- Green: Paired（Turn off after 30s）
- Red slow flashing: Low power
- Blue: Cancel Paired（Turn off after 120s）
- White: Charging complete（Turn off after 300s）
- White flashing: Firmware update

3.2.7. How To Connect And Turn On The Headset

Step 1: Insert the customer DP I/O end of the DP cable, included in the package, into the I/O port on the top left side of the helmet. Alternatively connect the Display Port Extension accessory and connect the custom DP cable to that.

Step 2: Connect the DP and the two USBs to the corresponding I/O of the PC host.

Step 3: Press and hold the power button on the right side of the HMD to power on the device.

Step 4: The PIMAX logo will light up in the headset and it will display the initial I/O.

Step 5: If the UI of the Headset in the PimaxClient is always on, it means that the connection is successful.

Step 6: if the headset connects successfully, the UI in the PimaxClient is always on.

※ For a more detailed guide, please refer to the PimaxClient beginners guide.

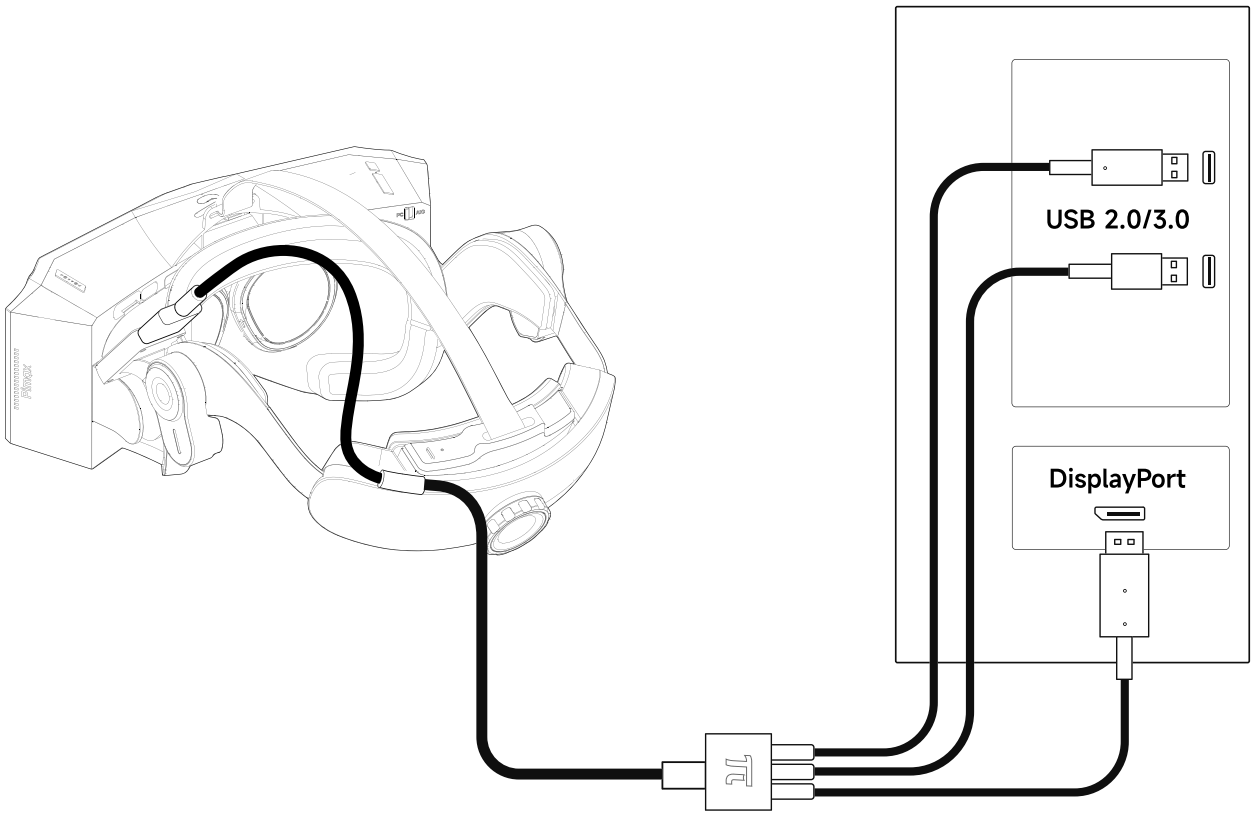

3.2.8. New Controller Pairing (Left And Right Controller Need To Be Paired Separately)

Step 1: Charge the controller for at least 15 minutes before pairing to ensure sufficient power of the controller.

> ※ When the indicator light Flashes Red, it is charging. If the indicator does not flash, re-plug the charging cable or press the π button

Step 2: Cancel pairing: Press the menu button + π button at the same time until the blue light is on.

> ※ It is paired by default when leaving the factory.

Step 3: Click SET PAIR in the PIMAX CLIENT, then press and hold A+B/X+Y until the controller's indicator light begins flashing blue.

Step 4: According to the prompt, and then click PAIR in the PIMAX CLIENT.

> ※
> - The pairing of controllers needs to be done individually one by one.
> - During the pairing process, it is necessary to ensure that the headset is not in sleep mode.

Step 5: Wait for the controller's green indicator light to come on. Once the light comes on the PIMAX CLIENT will that the controllers have been paired and the UI should show the controller graphic illuminated in the color green.

3.2.9. How To Adjust The Headset For A Comfortable Fit And View

Step 1: Adjust the strap dial located on the back of the main strap to tighten or loosen the fit.

Step 2: Fine-tune the top headstrap to adjust the headset's vertical position on your face.

Step 3: Fine-tune the length and position of the straps until you are comfortable with the fit and visual experience.

Step 4: The Auto IPD feature will adjust the IPD to the appropriate position.

※ You can also adjust the IPD in the "device settings → IPD" on the PimaxClient, enter the value of your IPD, and click "setting" to adjust the IPD to the appropriate position;

Step 5: Press the headband down to the back of the head and tighten the strap dial.

Step 6: Adjust the head strap to reduce pressure on the forehead.

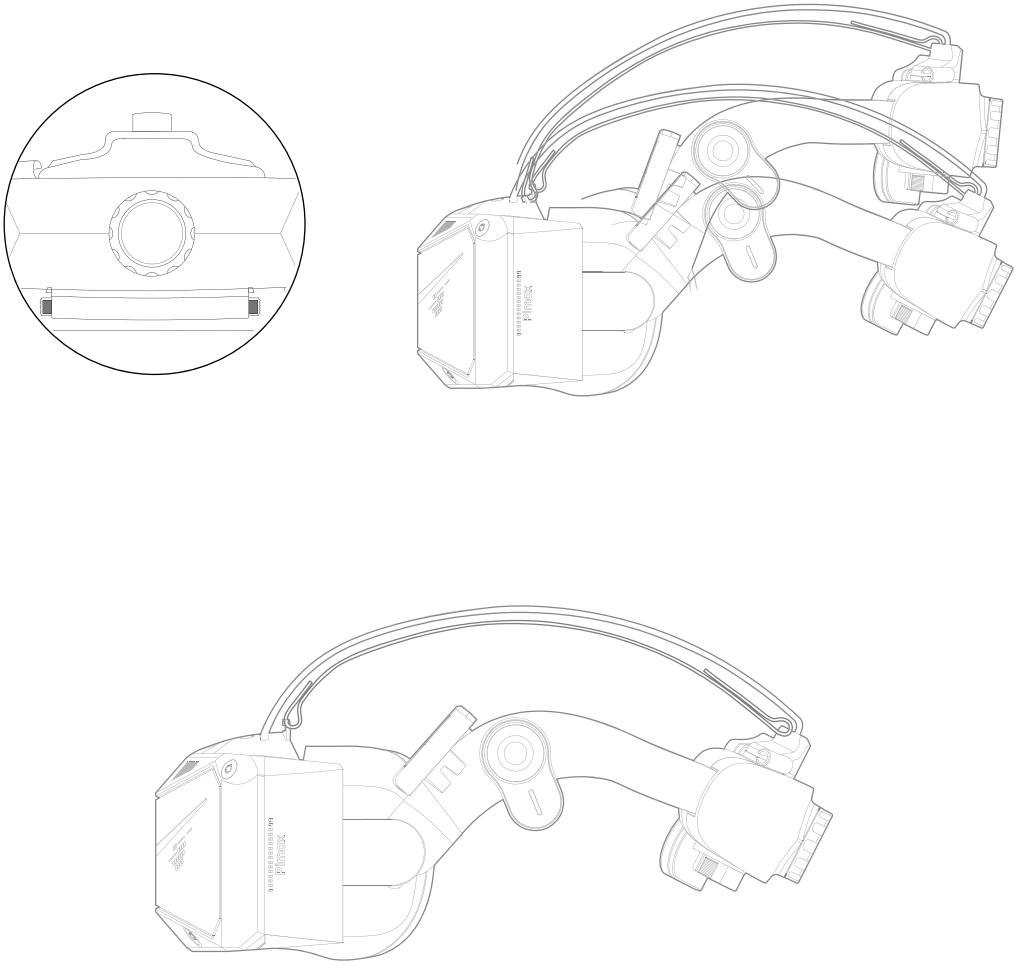

⚠ **CAUTION READ CAREFULLY**

1. Do not forcibly move the lens cylinder to avoid damage!
2. Please note that improper IPD may cause visual ghosting or eye fatigue. Accurate IPD settings help to obtain clear images and reduce eye fatigue.

3.2.10. How To Update Firmware

Open the Pimax Client on your PC. Navigate to "Device Settings → Check for Updates" in the client. Pimax Client; The system will check the currently installed software and firmware version, and will prompt you to perform an update if there is a new version available on the server.

> ⚠ **CAUTION READ CAREFULLY**
>
> 1. When updating the device firmware, the headset must be paired with the controllers to perform the OTA update:;
> 2. Before updating the firmware, please check the power of the headset and controllers. We that you only perform updates when the power of the headset and controllers all exceed 50%;
> 3. Please do not unplug the USB cable or turn off the computer when updating the device firmware;

3.3. Standalone VR

3.3.1. Standalone VR System Specifications

Items	Specifications
Screen	3.2 inches * 2
System	Android
CPU	SnapDragon XR2
GPU	Qualcomm® Adreno™ 650
RAM	8G
ROM	256G
WIFI	Wifi6E 2.4G 5G 6G
Bluetooth	BT5.1
I/O	Type-C * 3, mini-HDMI, DP1.4
Button	Power Button, Volume Button, IPD adjustment Button

3.3.2. 6 Degrees Of Freedom VR

The device can track your translational and rotational movements in all directions (up/down, left/right, forward/backward, pitch, roll, and yaw). Your movements in the real world will be captured and translated to what you see in the virtual world when interacting with appropriate content.

Ensure a safe environment before you start your VR experience.

1. Clear a safe indoor area of at least 2 meters by 2 meters. Keep the room bright, avoid spaces with mainly single-colored walls, glass, mirrors, moving pictures or other similar objects.
2. Remove the protective film that covers the headset's front cameras. Wear the lanyards connected to the Controllers. *Controllers used without Lanyards are at risk of being dropped or thrown during gameplay.
3. Set up your environment by following instructions on the VR Headset screen.

> ⚠ **CAUTION READ CAREFULLY**
>
> This product can not guarantee your safety even with a guardian system, you will need to always pay attention to the surrounding safety. While a guardian boundary can serve as a guide to help you ensure your own safety, the responsibility to create, maintain, and make use of a safe playspace falls solely on the user.

3.3.5. Powering On The VR Headset

Press and hold the power button for 2s to turn on the headset.

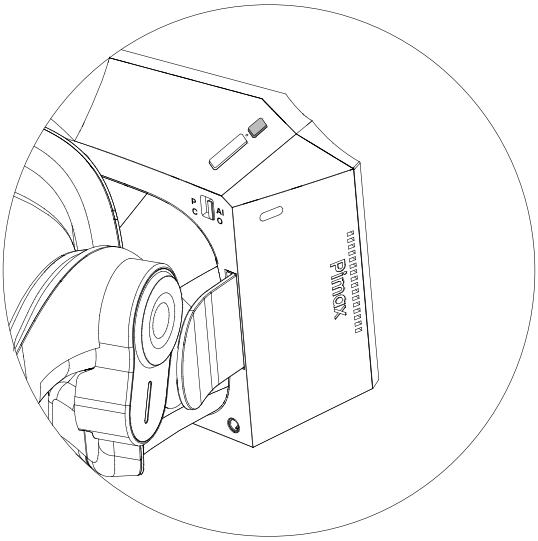

3.3.6. 1.1.1. How To Adjust The Headset For A Comfortable Fit And View

Step 1: Adjust the strap dial counter-clockwise to open the strap to it's widest setting.

Step 2: Place the headset on your head, adjusting the position of the headset so that your eyes are in the position of best visual quality.

Step 3: Tighten the rear dial until sufficient pressure is achieved.

Step 4: Adjust the top strap until the headset's vertical position remains at it's optimal location for your eyes.

Step 5: The headset's auto ipd will adjust the lens position automatically to give you the clearest image. Manual adjustments can be made using the ipd adjustment buttons on the top left of the headset.

Step 6: Fine tune both straps and headset position until a comfortable fit is achieved.

⚠ **CAUTION READ CAREFULLY**

1. Do not forcibly move the lens cylinder to avoid damaging the motor mechanism!
2. Please note that improper IPD settings may cause visual ghosting or eye fatigue. Accurate IPD settings help to obtain clear images and reduce eye fatigue.