3.3.7. Product Details (AIO)

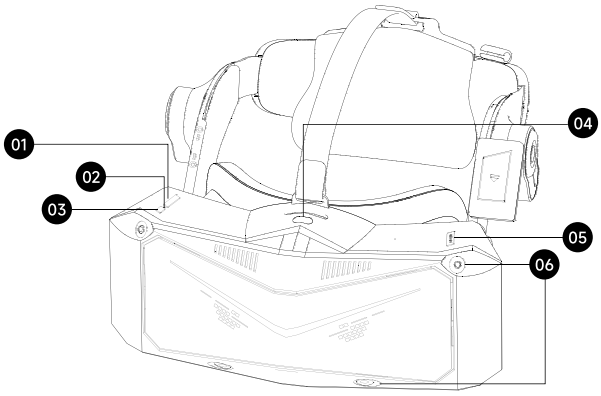

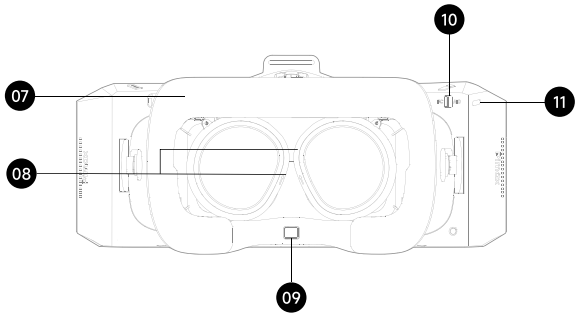

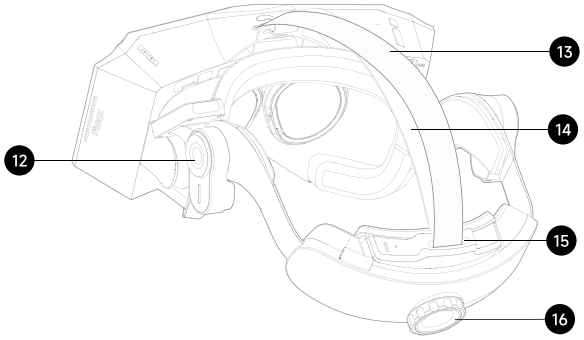

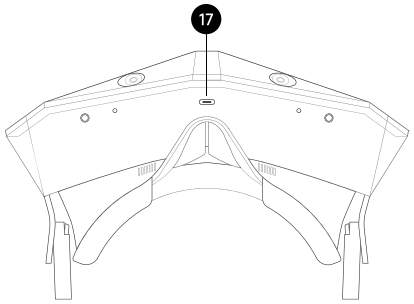

01. Volume Button

02. Status Indicator

03. Power Button

Power on: press and hold for 2 seconds
Shutdown: press and hold for 5 seconds
Restart: press and hold for 10 seconds
Sleep mode: Short press in power-on state

04. Mini-Hdmi I/O

For connecting wireless modules

05. IPD Adjustment Button

06. Tracking Camera

Do not block when using

07. Foam Mask

08. Eye Tracking Camera

Do not block when using

09. Proximity Sensor

After wearing the headset, the system wakes up automatically

10. PC/AIO Switch

11. Side TYPE-C I/O

Used for charging the headset and data transmission

12. Speaker System

Replaceable DMAS earphone

13. Power Cable

※Warning: Do not bend, punch or drag

14. Top Strap

Used to adjust the head pressure

15. Battery Sheath

16. Strap Dial

17. Bottom TYPE-C I/O

Used to connect accessories such as hand and gesture tracking modules.

Headset Status Indicator

- Off: Sleeping/Powered off/interrupt
- White flashing: the headset is powering on (the light will turn off after 3s)
- White: Charging completed
- Yellow: Replace the battery (It will turn off after replacement or after shutdown)
- Red: Low power
- Blue: Charging

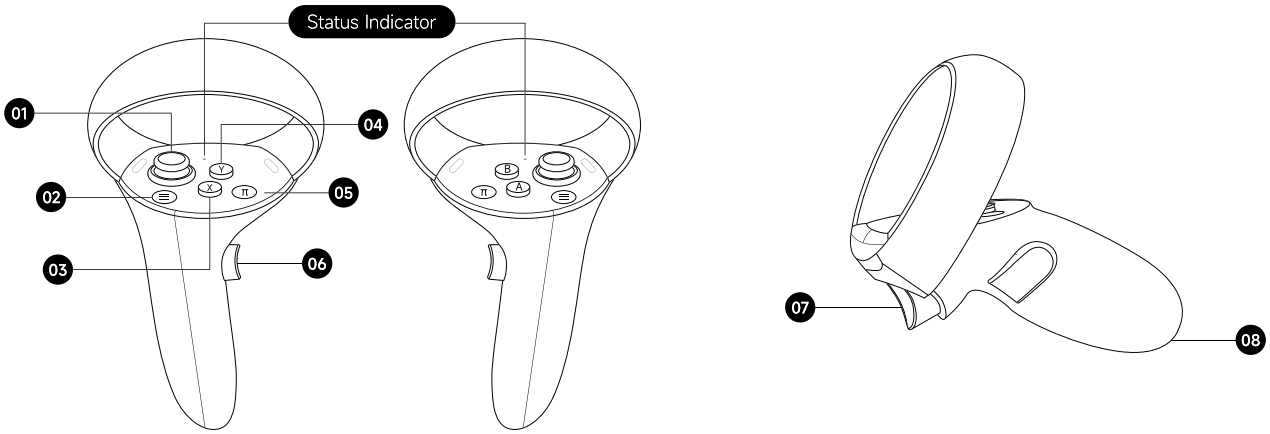

01. Joystick
Push: Turn pages
Press down: The same as Trigger

02. Menu
Single-click: Screenshot
Double-click: Screen recording

03. X/A Button
Click: Confirm

04. Y/B Button
Click: Back

05. Π Button
Single-click: Reset View

Double-click: Call up shortcut menu
Long press (6s): the controller will reset/turn on. After a reset, the controllers will vibrate once. The vibration duration will last 2s

Short press (1s): the controller starts up/ wakes up from standby, and the controllers will vibrate continuously 2 times. The duration of each vibration is 0.5s

06. Grip
Hold: Grab

07. Trigger
Click: The same as the A button to Confirm

08. TYPE-C I/O
Controller charging I/O

Controller Status Indicator Legend

- Off: Connected or Powered off
- Red flashing: Charging
- Blue flashing: Searching for connection
- Green: Paired（Turn off after 30s）
- Red slow flashing: Low power
- Blue: Cancel Paired（Turn off after 120s）
- White: Charging complete（Turn off after 300s）
- White flashing: Firmware update

3.3.8. Operating Instructions

Headset Control Mode

If the Controllers are not connected, you can interact with the home screen by moving your head to direct the crosshairs over your intended selection and clicking the Volume Up/Down button on the VR Headset.

Switching The Pointer Of The Master Controller

On the home screen, short press the Trigger of your left or right Controller to switch the pointer to the corresponding controller. The hand with the pointer is referred to as the master controller.

Screen Re-Centering

Put on the VR Headset and look straight ahead, press and hold the Home button of the Controller or VR Headset (or the Volume Down button of the VR Headset in head control mode) for more than 1 second to re-center the screen.

Disconnect The Controller

Press and hold the Home button until the status indicator turns red and the Controller vibrates.

Controllers Will Automatically Low Power Mode To Save Power In The Following Cases:

- When the Controllers are unpaired
- When the Headset is powered off
- The controller has been idle for 15 minutes
- When the Headset enters deep sleep (a while after the VR Headset is taken off)

Pairing A New Controller

If you need to pair a new Controller (the VR Headset can only connect one left Controller and one right Controller) or reconnect with an unpaired Controller.

Go to “Settings” ►“equipment”► “Controller”, click on “Pair”. Press and hold the“A button+B button”/“X button+Y button”of the controller at the same time until you feel a slight vibration (lasting about 4s), if the status indicator of the controller changes from blue to green, the pairing has been completed successfully.

Sleep / Wake Up The Headset

Option 1 (Proximity Sensor): Take off the VR Headset will initiate the automatic sleep function: putting the Headset on will wake the headset from sleep.

Option 2 (POWER Button): Press the Power button of the Headset for manual sleeping or waking up.

CAUTION READ CAREFULLY

When the headset wakes up after hibernation, it may experience a temporary position shift, which it will recover from after a moment.

Sleep / Wake Up The Controller

Sleep

① When the headset is working normally, the controllers will enter sleep mode after being idle for 15 minutes

② When one of the following conditions is met, the controllers will sleep immediately:

1. When the headset is hybernating;
2. When the controllers are unpaired;
3. When the headset is turned off.

Wake Up

① Pick up or touch the controllers to wake them up automatically
② Short press any button on the controllers to wake them

Hardware Reset

VR Headset reset:
If the visual in the headset freezes, or the headset does not respond after a short press of the Power button, you can press the Power button of the headset for more than 10 seconds to reboot the headset.

Controller reset:
If the controllers have no response to the home button and/or any button or the virtual controllers in the headset is stuck, you can press and hold the π button of the controllers for 15 seconds to reset the controllers.

The VR Headset Adjustment:
This device has no myopia adjustment function. The headset allows wearing most standard glasses with a frame width of less than 150mm.

CAUTION READ CAREFULLY

The virtual security zone reminder function of this product cannot completely guarantee your safety in the set area. Please pay attention to the surrounding security situation at all times

3.3.9. How To Update Firmware

Open the Pimax Client on your PC. Navigate to "Device Settings → Check for Updates" in the client. Pimax Client; The system will check the currently installed software and firmware version, and will prompt you to perform an update if there is a new version available on the server.

CAUTION READ CAREFULLY

1. When updating the device firmware, the headset must be paired with the controllers to perform the OTA update:;
2. Before updating the firmware, please check the power of the headset and controllers. We that you only perform updates when the power of the headset and controllers all exceed 50%;
3. Please do not unplug the USB cable or turn off the computer when updating the device firmware;

4. Parts Replacement

4.1. Lens Replacement

Step 1: Carefully unscrew and remove the mounting screws on the lens;

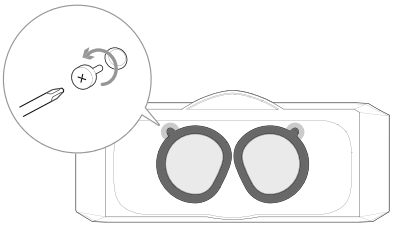

Step 2: Gently grasp the edge of the lens, rotate and lift the lens to remove it;

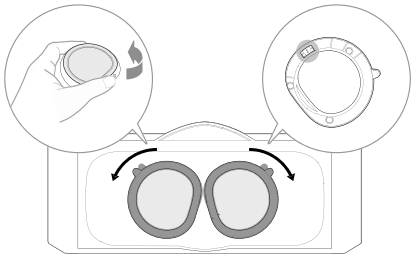

Step 3: Install the lens to be replaced on the lens barrel, and gently press the edge of the lens bracket to ensure that the installation position is aligned properly;

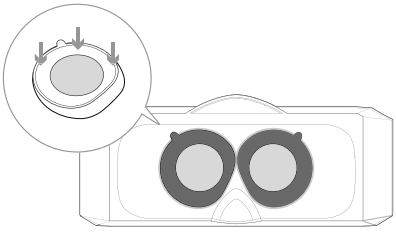

Step 4: Put the mounting screws back into their original position and tighten gently but firmly;

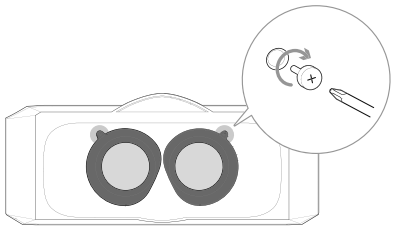

CAUTION READ CAREFULLY

When replacing the lens, it is necessary to disconnect the power supply of the device, disconnect the DP cable and wear anti-static gloves.

4.2. Faceplate Replacement

Step 1: Remove the Cover;

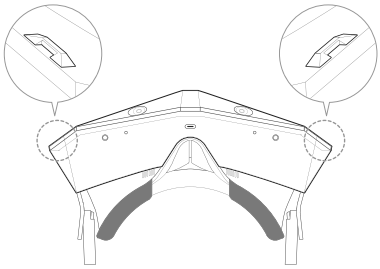

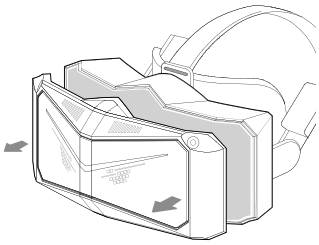

Step 2: Install and fasten the another Cover to be replaced according to the interface.

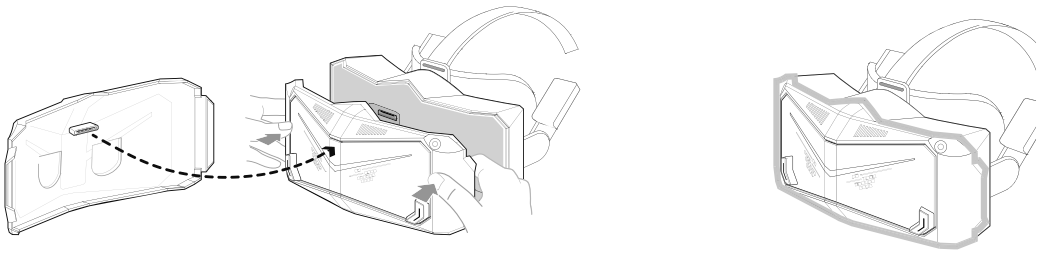

CAUTION READ CAREFULLY

When replacing the Cover, it is necessary to disconnect the power supply of the device, disconnect the DP cable and wear anti-static gloves.

4.3. Earphone Replacement

Step 1: Carefully remove the ear foam cover.

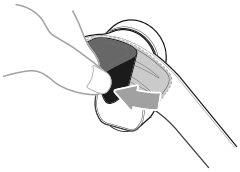

Step 2: Unscrew the mounting screws on the head strap.

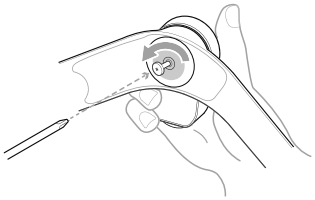

Step 3: Replace the DMAS Earphones and remount the screws.

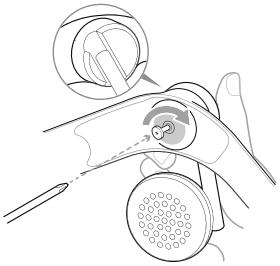

Step 4: Replace the ear foam cover.

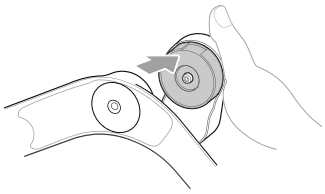

CAUTION READ CAREFULLY

When replacing the Earphones, it is necessary to disconnect the power supply of the device, disconnect the DP line and wear anti-static gloves.

5. How To Clean And Care For Your Pimax Headset

1. Cleaning And Caring For The Foam Facial Interface

Using a clean alchohol wipe, or a clean microfiber cloth dipped in a small amount of 75% alcohol solution, gently wipe the surface and surrounding areas in contact with the skin until the surface is slightly wet. Allow to dry for 5 minutes or until completely dry before use.

> ⚠ CAUTION READ CAREFULLY
> The foam facial interface will begin to exhibit signs of wear and tear after repeated cleaning and disinfection. Hand washing or machine washing is not recommended as it will accelerate the wear and tear. It is recommended to replace the foam occasionally as appropriate.
>
> **Leather PU Foam:** discoloration, stickiness on the surface, and reduced comfort on the face;
>
> **Cloth Foam:** discoloration, surface fuzzing, texture softening, glasses wearing users may have an increased chance of contact with the HMD lenses.

2. Lens Care

During use or storage, please be careful and prevent hard objects from touching the lens. Hard objects may damage the lenses.

Use a clean microfiber cloth, like those used to clean eyeglasses, to gently clean the lenses with a small amount of clean water or dry. Do not rub the lenses in a circular motion. Starting from the center of the lenses push the cloth out to the edge of the lenses to reduce the risk of scratches.

> ⚠ CAUTION READ CAREFULLY
> Do not use alcohol to clean the lenses, as it may cause damage to the lens coatings).

3. Headset (Excluding Lens, Sponge Mask), Controllers And Accessories Cleaning

Wipe the surface of the product gently with a sterilized wet towel (which can contain alcohol) or a micro-fiber dry cloth dipped in a small amount of 75% alcohol until the surface is wet and kept for more than 5 minutes, and then dry the surface of the product with a micro-fiber dry cloth.

> ⚠ CAUTION READ CAREFULLY
> Please avoid water entering the product body during cleaning.

6. Supervision

In the standalone mode: check the certification and supervision information of the product in the region of sale in the main menu "Settings → General → About → Supervision" after the headset is turned on.

7. Safety Warnings

To reduce the risk of personal injury, discomfort, or property damage, please ensure that all users of the headset carefully read the warnings below before using the headset.

Before Using The Headset

A comfortable virtual reality experience requires an unimpaired sense of motion and balance. Do not use the headset if you are sick, tired, sleepy, under the influence of alcohol or drugs, hungover, experiencing digestive problems, under emotional stress or anxiety, suffering from cold, flu, migraines, or headaches, or are not generally feeling well, as it may worsen your condition. Consult a doctor before using the headset if you have any conditions that impair your vision or mobility, are pregnant or elderly, have a heart or other serious medical condition, or suffer from seizures, migraines, or psychiatric conditions.

Safe Environment

Pimax Cystal headsets produce an immersive virtual reality experience that may distract you and make it hard to see your actual surroundings.

- Before using the headset, clear the area of obstacles and hazards, people, furniture, and any other items that may prevent you from moving freely. Also, check that you have enough space above and around you so that you can extend your arms while using the headset.
- Remember that any virtual objects that you see do not exist in the real environment, and their size and location are not real. Do not attempt to sit or stand on virtual objects or use them for support.Be aware of any real-world objects that might be located behind virtual objects.
- Never use the headset in situations that require attention, such as while walking, bicycling, or driving. Do not use the headset while in a moving vehicle.
- Remember that while you are using the headset, you may be unaware of people entering the area.
- Do not use the headset near walls, stairs, balconies, windows, open doorways, low ceilings, ceiling fans, light fixtures, breakable items, open flames, heat sources, or any other items that you can collide with or knock down.
- Keep in mind the location of the cables and power cords so that you do not walk on, trip over, or pull on them while using the headset. Do not jerk, knot, or bend the cables or cords.
- Do not handle sharp or otherwise dangerous objects while using the headset.

Discomfort

When using the headset, some people may experience dry eyes, eye strain, eye or muscle twitching, involuntary movements, altered, blurred or double vision, or other visual abnormalities, dizziness, light headedness, disorientation, discomfort or pain in the head or eyes, headaches, impaired balance, impaired hand-eye coordination, excessive sweating, increased salivation, nausea, fatigue, loss of awareness, or seizures and other symptoms of motion sickness.

When you start to use the headset, keep your first sessions short and take regular breaks. If you feel discomfort, stop using the headset and continue only after the symptoms have ended. Do not drive, operate machinery, or engage in other visually or physically demanding activities until you have fully recovered from any symptoms. Consider consulting a doctor if you are not able to see virtual objects clearly and comfortably.

Overuse

Take regular breaks when using the headset. Prolonged use may impact your hand-eye coordination or balance and may cause other negative effects.

Repetitive Stress Injuries

Use the headset in a comfortable position. Do not use excessive force when gripping the headset or pressing the headset buttons. If you experience tingling, numbness, burning, stiffness, throbbing, or other discomfort, stop using the headset and rest until you have fully recovered from any symptoms. If you continue to experience these symptoms, consult a doctor.

Interference With Medical Devices

The headset may emit radio waves, which can affect the operation of nearby electronics, including cardiac pacemakers, hearing aids, and defibrillators. If you use a pacemaker or other implanted medical device, do not use the headset without first consulting a doctor or the manufacturer of your medical device. Maintain a safe distance between the headset and your medical devices and stop using the headset if you observe any interference with your medical device.

Hearing Loss

Excessive exposure to loud sounds can cause hearing damage. When using headphones with the headset, start with the volume at a low level and increase the volume slowly if needed. Do not turn up the volume too high.

Seizures

Some people may experience severe dizziness, fainting, epileptic seizures, or blackouts triggered by light flashes, patterns, or exposure to infrared light sources of an eye tracker even though they have no history of these conditions. If you experience any of these symptoms, stop using the headset and consult a doctor. If you have a previous history with these symptoms, consult a doctor before using the headset. To reduce the likelihood of a seizure, do not use the headset if you are tired.

No Eye Protection

Pimax Crystal headsets do not provide eye protection against impact, debris, chemicals, UV light, other harmful lights, particles, projectiles, or other physical hazards.

Electrical Shock

Do not try to disassemble, open, service, or modify the headset or power supply unit, as this can lead to electrical shock or other hazards and may damage the headset or the power supply unit.

8. Battery Safety

- The headset and controllers contain lithium ion polymer batteries. Do not connect the metal conductor with the two poles of the battery, or touch the end of the battery, so as to avoid short circuit of the battery, burns and other physical injuries caused by overheating of the battery.
- Do not expose batteries to high temperature or around heating equipment, such as sunshine, heater, microwave oven, oven or water heater. Battery overheating may cause explosion.
- Do not disassemble or modify the battery, insert foreign matters, or immerse in water or other liquids, so as to avoid overheating, fire or explosion of battery leakage.
- If the battery leaks, do not contact the skin or eyes with the leaked liquid.
- In case of contact with skin or eyes, please wash immediately with water and go to the hospital for medical treatment.
- Do not drop, squeeze or puncture the battery. Avoid exposing the battery to large external pressure, which may lead to short circuit and overheating inside the battery.
- In case of battery bulge, contact Pimax customer service center to replace the battery as soon as possible.
- ·When the standby time of the device is significantly shorter than the normal time, please contact Pimax customer service center to purchase/replace the battery.
- This device is equipped with replaceable batteries. Please replace them with Pimax standard batteries. Replacing the wrong type of batteries by yourself may cause explosion hazard.

※ Do not disassemble, replace or repair the equipment by yourself, or you will lose the warranty qualification. If you need repair service, please contact customer service or Pimax authorized service provider for repair.

9. Operation Guide

Within the period of validity of the regulation, you can enjoy the right to repair, replace and return goods in accordance with this provision. The above shall be handled with invoices or relevant valid shopping vouchers.

> ※ The main engine in this Regulation includes headset and controllers.

In case of quality problems within 7 days from the date of delivery, consumers can choose to refund the purchase price at one time according to the invoice price or get a replacement product of the same model;

In case of quality problems within 15 days from the delivery date, consumers can choose to replace products with another of the same model;

Consumers can get device repairs for quality problems/manufacturing defects within 12 months from the delivery date for free;

The warranty period of accessories (including controllers and battery) other than the main hmd unit is 6 months from the delivery date.

The warranty period for other accessories (including face foam, top strap, DP cable and other vulnerable components) is 3 months from the delivery date.

> ※ Harvest date: calculated from the date when the logistics shows that the order has been signed.

Refer to detailed after-sales regulations：https://cn.pimax.com/return-refund/

⚠ **Important Tips**

The Following Situations Are Not Within The Scope Of The Regulation

- Damage caused by failure to use, maintain and keep in accordance with the requirements of this product manual;
- Gifts and packaging boxes other than this product;
- Damage caused by disassembly, modification and maintenance of unauthorized service providers;
- Damage caused by fire, flood, lightning and other force majeure;
- The warranty period has expired.

FCC WARNING

This device complies with part 15 of the FCC Rules. Operation is subject to the following two conditions: (1) this device may not cause harmful interference, and (2) this device must accept any interference received, including interference that may cause undesired operation.

Any changes or modifications not expressly approved by the party responsible for compliance could void the user's authority to operate the equipment.

NOTE: This equipment has been tested and found to comply with the limits for a Class B digital device, pursuant to Part 15 of the FCC Rules. These limits are designed to provide reasonable protection against harmful interference in a residential installation. This equipment generates, uses and can radiate radio frequency energy and, if not installed and used in accordance with the instructions, may cause harmful interference to radio communications. However, there is no guarantee that interference will not occur in a particular installation.

If this equipment does cause harmful interference to radio or television reception, which can be determined by turning the equipment off and on, the user is encouraged to try to correct the interference by one or more of the following measures:

-- Reorient or relocate the receiving antenna.

-- Increase the separation between the equipment and receiver.

-- Connect the equipment into an outlet on a circuit different from that to which the receiver is connected.

-- Consult the dealer or an experienced radio/TV technician for help.

The device has been evaluated to meet general RF exposure requirement. The device can be used in portable exposure condition without restriction

Manufacturer's Name: Pimax Technology (Shanghai) Co., Ltd.
Product Name: Controller
Trade Mark: Pimax
Model number: H1-R

This device is in compliance with the essential requirements and other relevant provisions of Directive 2014/53/EU. All essential radio test suites have been carried out. The device complies with RF specifications when the device used at 5mm from your body. The product shall only be connected to a USB interface of version USB2.0

RF Secification:

Function	Operation Frequency	Max RF output power:	Limit
BLE	2402MHz–2480MHz	3.43 dBm	20 dBm.

This product can be used across EU member states.

Declaration of Conformity (DoC)

We, Pimax Technology (Shanghai) Co., Ltd.
Building A, Building 1, 3000 Longdong Avenue, China (Shanghai) Pilot Free Trade Zone
406-C Shanghai P.R. China

Declare that the DoC is issued under our sole responsibility and belongs to the following product(s):

Product Type: **Controller**

Trademark: **Pimax**

Model Number(s): **H1-R**

(Name of product, type or model, batch or serial number)

System components:

Antenna:

BT antenna : FPC Antenna ; Antenna Gain: 2dBi

Battery: DC 3.7V, 700mAh

Optional components:

HardWare Version: V2.0

Soft Ware Version: V0.7.11

MANUFACTURER or AUTHORISED REPRESENTATIVE:

- **Address:**

Pimax Technology (Shanghai) Co., Ltd.

Building A, Building 1, 3000 Longdong Avenue, China (Shanghai) Pilot Free Trade Zone 406-C Shanghai P.R. China

Signed for and on behalf of: Pimax Technology (Shanghai) Co., Ltd.

Name and Title:	**Jack yang/ Quality Manager**
Address:	**Building A, Building 1, 3000 Longdong Avenue, China (Shanghai) Pilot Free Trade Zone 406-C Shanghai P.R. China**