MoC Sharing
keyless, easy to share

SYSTEM SPECIFICATION

12th, Aug. 2018

©MoC Sharing – All rights reserved

Document History				
Author/Date	Action	Check	Description	Version
Lukas/2018-07-15	Draft	Jeremy	First creation	1.0
Jeremy/2018-08-12	Modify	Lukas	New structure added	1.1

©MoC Sharing – All rights reserved

Contents

1 SOLUTION DESCRIPTION 4

1.1 SYSTEM 4
1.2 CONCEPT 4
1.3 HARDWARE 5
1.3.1 Optional Peripherals 5
1.4 BACK-END PLATFORM 6
1.5 SOLUTION ARCHITECTURE 7

2 SYSTEM DESCRIPTION 7

2.1 MOCBOX HARDWARE DESCRIPTION 7
2.1.1 MocBox Assembly 8
2.1.2 MocBox Interfaces 9
2.1.3 MocBox Technical Specification 10
2.2 VEHICLE DATA RECORDING 11
2.3 VEHICLE CONTROL 12
2.3.1 Vehicle key solution 12
2.3.2 Vehicle Wiring Solution 13
2.4 HARDWARE CONTROL AND FIRMWARE UPDATE 13
2.5 VEHICLE CONFIGURATION AND EVENT DATA TRANSMISSION 14
2.6 APPLICATION PROGRAMMING INTERFACE (API) 14
2.7 MOC IOT SERVER 14

3 LABEL 15

4 PACKAGING 15

5 INSTALLATION 16

©MoC Sharing – All rights reserved

1 Solution Description

1.1 System

MoC Sharing provides the latest and reliable shared mobility hardware system to the mobility operators.

The system provides a new way to share and manage vehicles. Instead of sharing the original key, MoC developed a technology to allow the users to share and manage their vehicles with smartphones. With the hardware installed in the vehicle, users can use their smartphones to lock/unlock the door, enable/disable the vehicle immobilizer and almost all the necessary vehicle information can be recorded and uploaded to the cloud, which is 24/7 available to the authorized operators via MoC APIs. MoC aims to enable the fleet operators to focus on their core business. The remaining onboard technical works are professionally cared by MoC.

The MoC Solution can be used for diverse business cases, which are summarized in the following sections:

- Public Sharing
- Traditional car rental
- Cooperative fleet management
- Private user

MoC provides a complete solution, which includes:

- Hardware
  - MocBox: onboard hardware system
  - Key holder: to hold the physical key when returning the car
  - Card holder: to hold the cards like fuel cards and parking cards when returning the car
- Software
  - Web services (back-end API system)
  - Mobile SDK (for the use of Bluetooth)
  - MocFleet: a powerful fleet management platform for clients' daily operation usage

1.2 Concept

MoC aims to develop a solution to allow shared mobility business to have high compatibility to different kinds of vehicles in different countries without complicated

©MoC Sharing – All rights reserved

installation. MoC provides not only the traditional vehicle wiring control solution, but also an innovation way to use the original vehicle key. The electronic part of the original vehicle key is stored in the MocBox. Standard authentication and encryption methods are implemented to ensure a highly secured communication. The MocBox only accepts the authorized and authenticated requests from the smartphone or to lock/unlock the vehicle or enable/disable the immobilizer.

1.3 Hardware

MoC introduces the innovated hardware MocBox, which can be easily installed onto the vehicle.

MocBox provides diverse functionality including:

- Central door locking control and immobilizer control
- Vehicle information monitoring via interfaces e. g. OBD II: fuel level, odometer etc.
- Driving behavior monitoring via G-Sensor
- 3G/GPRS network
- Bluetooth
- SMS

- GPS & Geofencing, GPS-based mileage calculation
- OTA (Over the Air): Firmware remote update

1.3.1 Optional Peripherals

MoC provides various peripherals for different business purposes:

©MoC Sharing – All rights reserved

- Key holder
  Key holder is used to keep the vehicle key. It helps to ensure the key is returned when order is finished.
- Card holder
  Card holder is used to keep the vehicle cards, e.g. fuel card and parking card. It helps to ensure that the cards are returned when order is finished.

1.4 Back-end Platform

MocFleet is developed to meet all the requirements of managing the vehicle fleet and to make all the real-time information visible. All the important hardware control APIs are integrated in the platform. Clients can easily monitor and control the vehicles and devices, check event logs and configure user accounts.

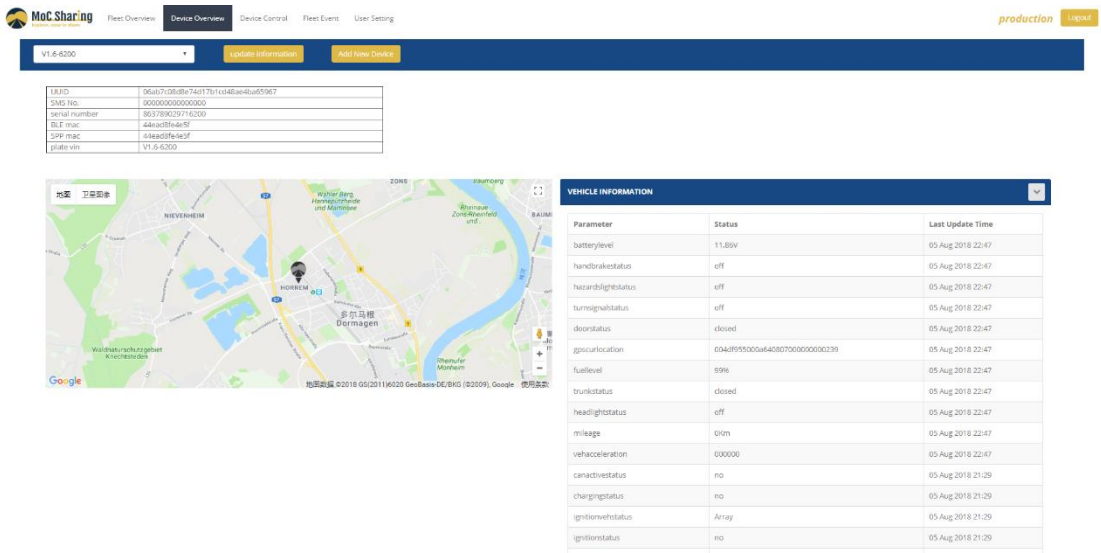

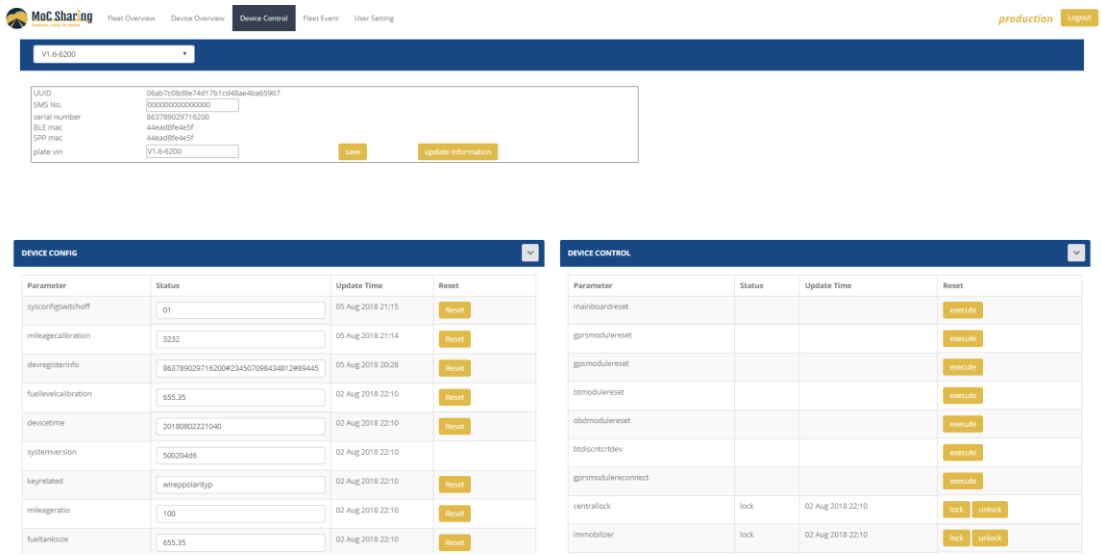

1.5 Solution Architecture

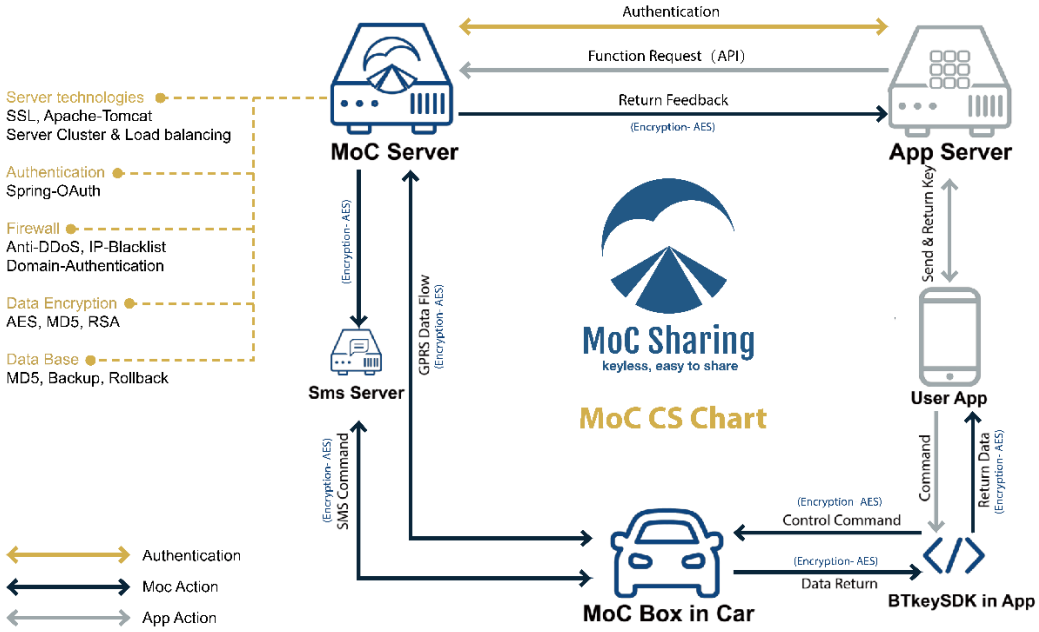

MoC middleware offers complete service for 3rd party app to integrate. The MoC solution architecture is shown above. In the chart it contains the following roles:

- MoC server: the main service center of MoC. Responsible for the secure communication management, the control signal generation and the vehicle information management.
- MocBox: the onboard telematic hardware
- App Server: the 3rd party application server
- User App: the 3rd party app installed in user's phone
- BTkey SDK: the development kit which needs to be included in the 3rd party app

2 System Description

2.1 MocBox Hardware Description

MocBox has a compact housing design with multiple interfaces for various use cases and for different signal communication. It is optimized for high stability and reliability.

©MoC Sharing – All rights reserved

2.1.1 MocBox Assembly

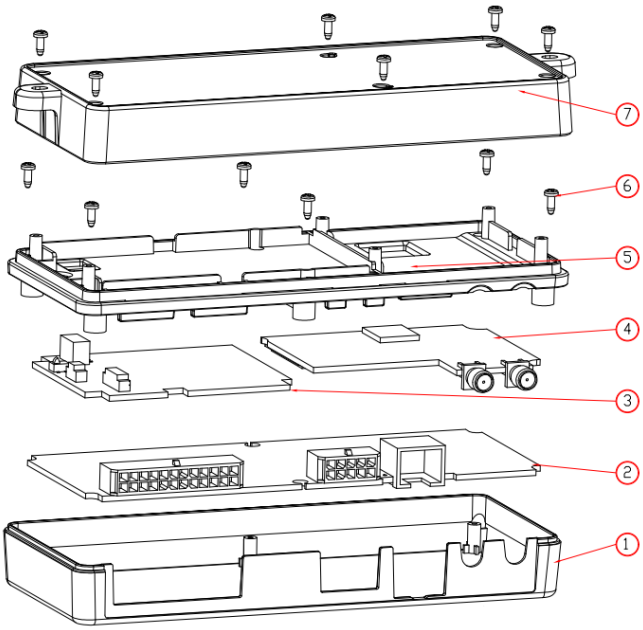

Number	Component	Amount	Material
7	Bottom case	1	ABS
6	Screws	12	Metal
5	Middle case	1	ABS
4	3G/BT PCB	1	FR-4
3	Sub PCB	1	FR-4
2	Main PCB	1	FR-4
1	Upper case	1	ABS

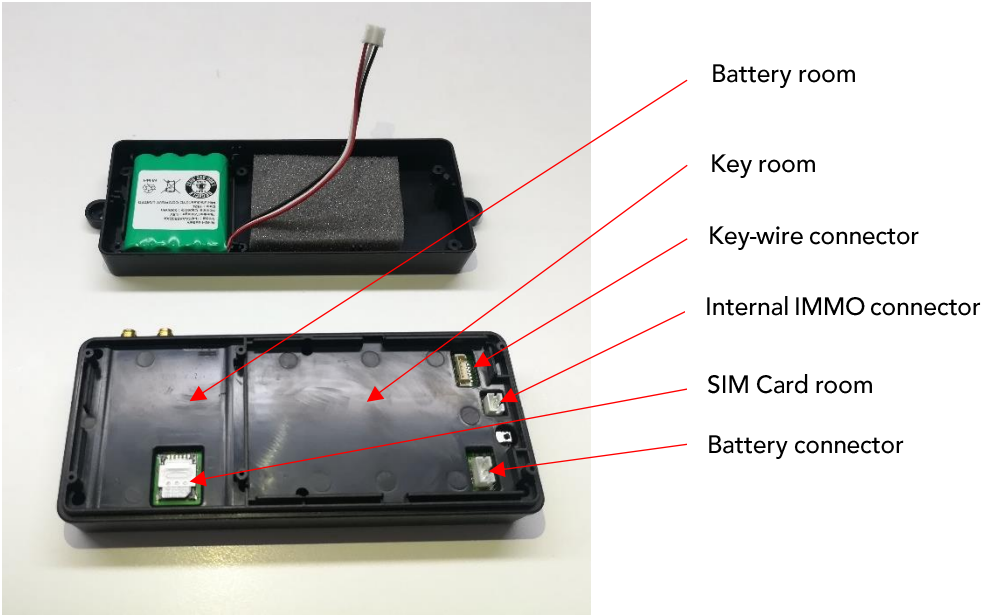

©MoC Sharing – All rights reserved

2.1.2 MocBox Interfaces

PORT	Function Description
A	I/O Interface (2*12)
B	OBD/Power Supply
C	FW Flash Port (reserved)
D	GPS Antenna connector
E	3G Antenna connector

PORT A Description

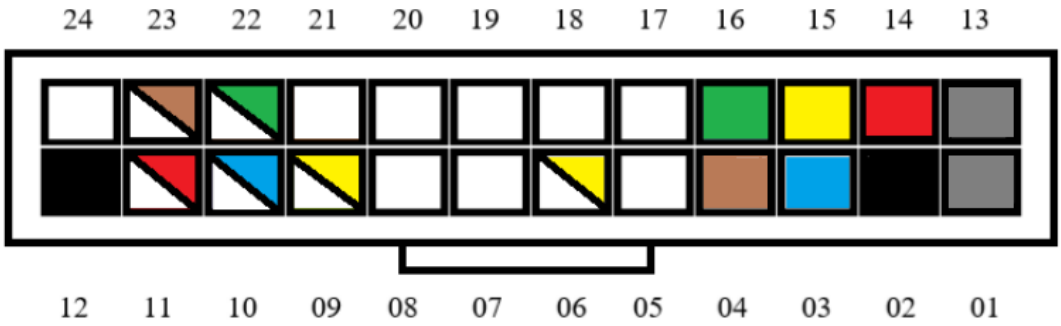

01: IMMO_A	09: Fuellevel_detection_B (max. 75V)	17: Card_Holder_IN_B (0-3.3V)
02: GND	10: Ignition_detection (0-12V)	18: Key_Holder_I/O (0-3.3V)
03: Current_detection_OUT (max.30mA)	11: Relay_A (0.5A)	19: CAN_L
04: Centrallock_Open (0.5A)	12: GND	20: USART3_RXD (3.3V) (for RFID)
05: Card_Holder_IN_A (0-3.3V)	13: IMMO_B	21: USART3_TXD (3.3V) (for RFID)
06: Fuellevel_detection_A (max. 15V)	14: PWR_supply _IN (12V, 0.3A)	22: VehSpeed_detection (0-12V)
07: CAN_H	15: Current_detection_IN (max. 30mA)	23: Relay_B (0.5A)
08: Reserved	16: Centrallock_Close (0.5A)	24: PWR_supply_OUT (12V, 0.1A)

- Ports filled with colour are equipped with cables in standard packaging.
- Port 03 and Port 15: two cables are attached together for convenient use.

©MoC Sharing – All rights reserved

- Other ports without colour filled will not be equipped with cables in standard packaging. Cables are extra provided only after request. (Port 07 and 19 are two cables in twisted pair)

Attention: all cables are the same, only different in colour. The cables for colour ports can also be used for ports without colour.

<u>PORT A Connector Description</u>

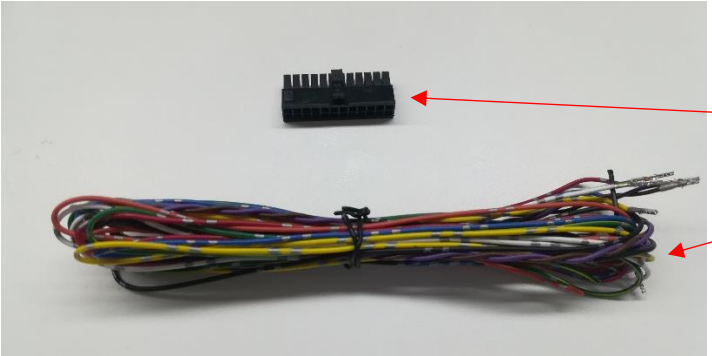

Clients can select the signal cables as needed according to their fleet by inserting the signal cable into PORT A Connector and then connect to PORT A on the MocBox.

2.1.3 MocBox Technical Specification

	Condition	Min	Max	Units
Operating temperature	-	-30	65	℃
Storage temperature	-	-20	35	℃
Operating Voltage	-	9	16	V
Standby mode current	12V	8	30	mA
Sleep mode current	12V	7	10	mA

Component	Description
Dimensions	144*60*35 mm
Weight	c.a. 220 g
GPS /Glonass	Position accuracy < 2.5 m Speedy accuracy < 0.1 m/s Frequency 1575.45 MHz Max height 50000 m; max speed 500 m/s
Bluetooth	Max connection distance: SPP 30 m, BLE 60 m (open space) BT Version: (BLE)

©MoC Sharing – All rights reserved

	Support both SPP and BLE connection methods
Accelerometer	Triple axis measurement + triple axis gyroscope (6 degrees motion fusion) +/-16 g and +/- 2000 degrees/sec measurement range Low frequency noise management included Tap detection
Wire Harness	Flat OBD cable, GPS&3G SMA connector, RJ45 Ethernet cable, multiple I/Os
Communication Standards	Asian & European standards: Dual-Band UMTS/HSPA+ 900/2100 MHz; Quad-Band GSM/GPRS/EDGE 850/900/1800/1900 MHz American Standards: Dual-Band UMTS/HSPA+ 850/1900 MHz Quad-Band GSM/GPRS/EDGE 850/900/1800/1900 MHz GPRS model and EDGE model GPRS multi-slot class 12 EDGE multi-slot class 12

2.2 Vehicle Data Recording

The standard connection of the MocBox is through the OBD-II port. MocBox is powered and reading vehicle information from this port.

MoC gives high priority to the vehicle security. MocBox only reads the related vehicle data using standard or private diagnostic protocols. It does not send any bits to affect the vehicle internal communication network (CANBUS).

Thanks to the abundant worldwide project experience in the past few years, MoC builds a large vehicle data library. And for the new cars which are not listed in the library, no matter it is electric or combustion car, MoC experts are capable to do the decoding remotely using our standard tools.
The current available vehicle information consists of:

- Fuel level (Petrol/Diesel or SOC for EV)
- Gas level (for Gas-Gasoline Hybrid Vehicle)
- Odometer
- Ignition status
- Charging status (for EV)
- 12 V battery level
- Dashboard status
- CANBUS active status
- RPM

©MoC Sharing – All rights reserved

- MIL (DTC)
- Door status, Door lock status (depends on the vehicle)
- Trunk status, Trunk lock status (depends on the vehicle)
- Window status (depends on the vehicle)
- Headlight status (depends on the vehicle)
- Turn Signal status (depends on the vehicle)
- Hazard light status (depends on the vehicle)
- Handbrake status (depends on the vehicle)

2.3 Vehicle Control

The most exited user experience for the modern car sharing/fleet users is to lock & unlock the vehicle per APP or per cards without traditional vehicle key. And for the security concern of the car sharing/fleet operators, the on-Board hardware should be able to control the immobilizer to allow or forbid the users to start the engine. MoC developed two different kinds of vehicle control solutions: "vehicle key solution" and "vehicle wiring solution". These two solutions are designed for different markets and operators.

2.3.1 Vehicle key solution

Some operators prefer to control the vehicle without tampering the vehicle itself, due to the risk of losing the original vehicle warranty and the complicated installation, which requires professional vehicle mechatronic knowledge and is more time consuming. With the concern above, "vehicle key solution" is the better way for their business.

<u>Scenario 1: Keyless vehicle key</u>

Some vehicles are equipped with keyless vehicle keys, which means that the keys are not required to be inserted into the ignition barrel to start the engine. The vehicle can detect the key inside the vehicle and allows the engine start.
The installation and control process are described as follows:

- The vehicle key chip should be removed from the key case and installed into the MocBox.
- The authenticated request of centrallock lock/unlock will be processed in the MocBox by generating electrical pulses to directly control the key chip.
- The engine start request is granted by powering the key chip by MocBox.
-

This kind of hardware installation is much simpler. It takes normally less than 10 min., depending on the vehicle. As for the details of the installation process, please contact MoC Team for further documentation.

<u>Scenario 2: non-Keyless vehicle key</u>

©MoC Sharing – All rights reserved

Some vehicles are equipped with non-keyless vehicle key, which means the metal blade of the key needs to be inserted into the ignition barrel or the whole key needs to be inserted into a socket to start the engine.
The installation and control process are described as follows:

- The key chip should be removed from the key case and installed into the MocBox.
- An external and internal antenna (MocBox inside) are requested to transfer the signal of the transponder on the vehicle key chip to the immobilizer detector of the vehicle near the ignition barrel. The external antenna needs to be installed near the immobilizer detector.
- The authenticated request of centrallock lock/unlock will be processed in MocBox by generating electrical pulses to directly control the key chip.
- The engine start request is granted by controlling the relay between the external antenna and the internal antenna inside the MocBox.

This kind of hardware installation takes normally 10-20 min., depending on the vehicle. As for the details of the installation process, please contact MoC Team for further documentation.

2.3.2 Vehicle Wiring Solution

Some operators prefer to control the vehicle directly without tempering the vehicle key, due to the lack of experience to disassemble the vehicle key properly, or the fact that they have more consideration of the vehicle security against the vehicle theft. The concept of "wiring solution" is developed and implemented in MocBox with a large amount of I/Os to provide digital signals of outputs and inputs.
The installation and control process are described as follows:

- Connect the MocBox to the centrallock relay inside of the vehicle.
- Install the external relay to connect the vehicle ignition wire, and then connect the MocBox with the relay.
- The granted request of centrallock lock/unlock and engine start will be processed in the MocBox by outputting the digital control signals to the related relay.

2.4 Hardware control and Firmware update

Fleet manager can send commands via 3G/GPRS or SMS to MocBox to remotely control the on-Board hardware, such as:

- Centrallock lock/unlock
- Immobilizer lock/unlock
- Centrallock & Immobilizer lock/unlock
- Vehicle information get
- Hardware status get
- Network status get

©MoC Sharing – All rights reserved

- Event filter
- MocBox soft reboot
- Soft reboot of single module (3G module, Bluetooth module, GPS module etc.)
- Simcard related information (APN, username, password) configure

Firmwares with new features or bug shoots can be remotely updated (OTA) through 3G/GPRS onto MocBox.

2.5 Vehicle configuration and event data transmission

Vehicle CANBUS selection can be done on MocFleet (MoC Fleet Portal). MoC has already successfully been compatible with various car brands, such as VW, Audi, BMW, Mercedes, Skoda, Renault, Seat, Land Rover, Toyota, Mazda, Honda, Nissan, Suzuki. As for detailed car model list, please contact MoC Team for further documentation.

After the correct vehicle CANBUS configuration, MocBox can read the vehicle information from its OBD-II port. Each action taken on the vehicle (centrallock, immobilizer, ignition, door status etc.) will generate an active push to the MoC server, which can be transferred to 3rd party server for event logging.

2.6 Application Programming Interface (API)

MoC aims to enable convenient and safe communications between MoC Server and 3rd party server by creating a comprehensive API system for data exchange. The APIs consists of:

- User authentication
- Token application
- Command to control hardware or get related vehicle/hardware information
- Event log
- Active push

2.7 MoC IoT Server

MoC server is hosted by Alibaba Cloud—ECS (Elastic Compute Service) with the location in Frankfurt Germany. The Alibaba ECS provides fast memory and calculation with 99.95% availability. Additionally, MoC also implemented SLB (Sever Load Balancer), which could help to manage sudden spikes in traffic, minimize the response time and maintain 99.99% availability. Server reliability is a highly important topic for the fleet management and car sharing services. MoC continues to improve and maintain the server and provide the best SLA to our customers to accelerate their business success.

©MoC Sharing – All rights reserved

3 Label

Symbol	Description
MN	Model Name
86378902563399	Unit serial number
V203GEV101840	V20: Hardware main board version V2.0 3GE: 3G Module Europe / 3GA: 3G Module LATAM V10: Hardware sub board version V1.0 1840: Produce time Year 2018, Week 40

4 Packaging

Type	Description	Dimension	Package
Inner Box	1 Unit / 1 Box	180*112*62 mm	

©MoC Sharing – All rights reserved

Outer Box	30 Unit/1 Box	600*400*200 mm	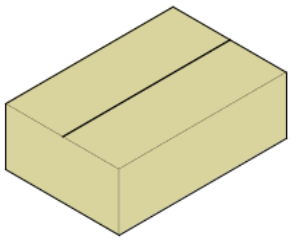
Pallet	1050 unit/35 Box (5 * 7 Outer Boxes)	1200*1000*1400 mm	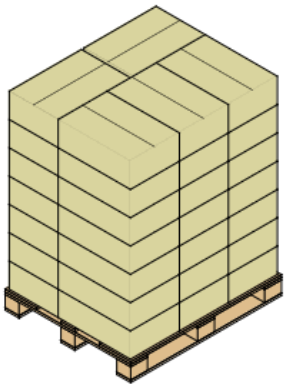

5 Installation

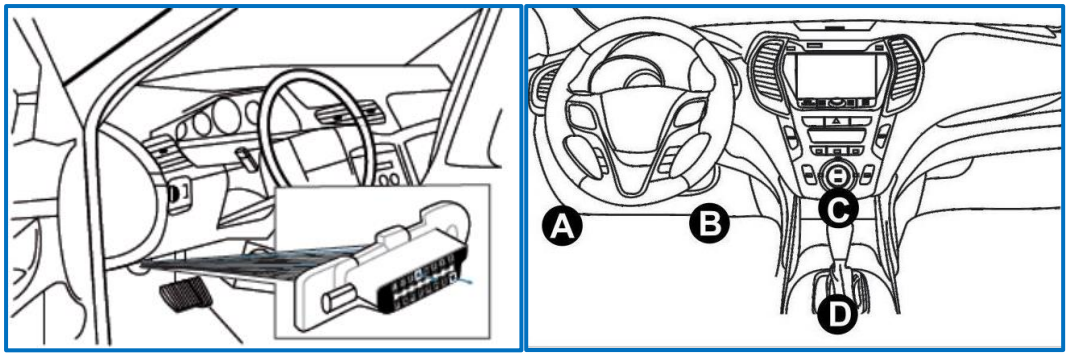

For the in-car installation, connect MocBox to the OBD port of the vehicle and hide and fix the MocBox behind the plastic panels of the dashboard as shown in the picture.
As for the detailed installation process or installation in other kinds of vehicle, please contact MoC Team for further documentation.

©MoC Sharing – All rights reserved

FCC ID: 2ARKTMOC-CS

Changes or modifications not expressly approved by the party responsible for compliance could void the user's authority to operate the equipment.

This device complies with Part 15 of the FCC Rules. Operation is subject to the following two conditions: (1) this device may not cause harmful interference, and (2) this device must accept any interference received, including interference that may cause undesired operation.

This equipment has been tested and found to comply with the limits for a Class B digital device, pursuant to Part 15 of the FCC Rules. These limits are designed to provide reasonable protection against harmful interference in a residential installation. This equipment generates, uses and can radiate radio frequency energy and, if not installed and used in accordance with the instructions, may cause harmful interference to radio communications. However, there is no guarantee that interference will not occur in a particular installation.
If this equipment does cause harmful interference to radio or television reception, which can be determined by turning the equipment off and on, the user is encouraged to try to correct the interference by one or more of the following measures:
-- Reorient or relocate the receiving antenna.
-- Increase the separation between the equipment and receiver.
-- Connect the equipment into an outlet on a circuit different from that to which the receiver is connected.
-- Consult the dealer or an experienced radio/TV technician for help.

This equipment complies with FCC radiation exposure limits set forth for an uncontrolled environment. This equipment should be installed and operated with a minimum distance of 20cm between the radiator & your body. This transmitter must not be co-located or operating in conjunction with any other antenna or transmitter.