Replace the side brush

There are two groups of side brushes, both located at the front and bottom of machine. There are two brush plates under each side brush.

Note: Only components sold or recommended by iTR are applicable to iMop.

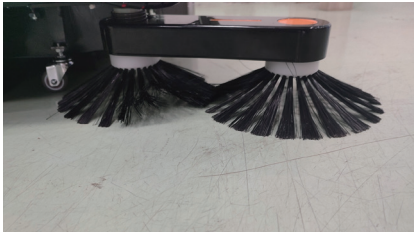

1. Hold the connection between brush plate and side brush and use downward force and you can remove side brush;

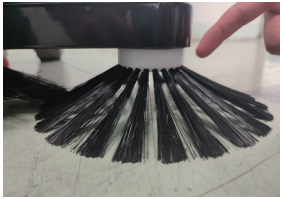

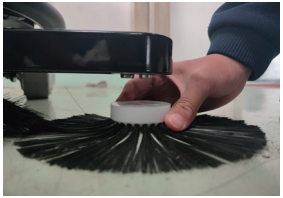

2. Please take out the new brush plate. The brush plate and the side brush are connected by magnetic adsorption. The notch at the top of brush plate corresponds to the convex notch of side brush, and brush plate will automatically adsorb on side brush.

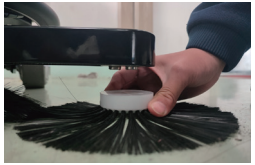

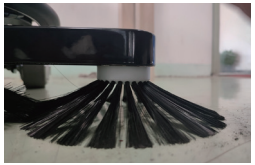

Replace the roller brush

There are two roller brushes, which are located at the bottom of machine. When you are going to change the roller brush:

1. Firstly, please remove the roller brush cover plate. You are recommended to use an socket head wrench to unscrew the three socket head screws on the roller brush cover plate (screws are located on the right side of roller brush) , and then, the removed will be completed;

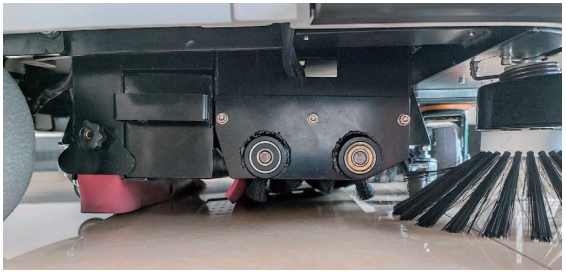

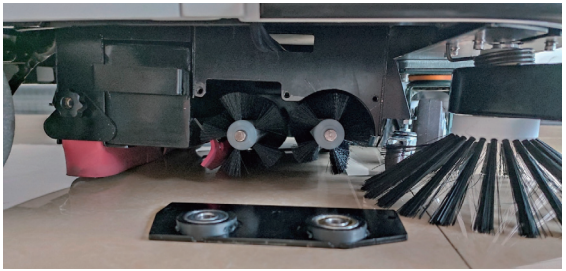

2. Please pull out two roller brushes, and then, you can replace them with new ones;

3 When installing a new roller brush, please insert the end of roller brush with square hole inward into socket of roller brush components, and then, the installation will be completed;

4 Finally, please recover the cover plate of roller brush and screw on the three socket head screws. Please confirm the tightness of socket head screws, and then, the replacement will be completed;

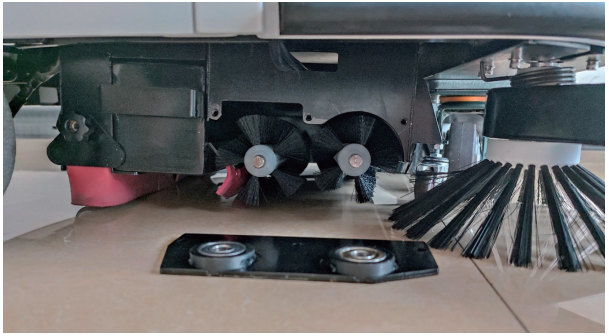

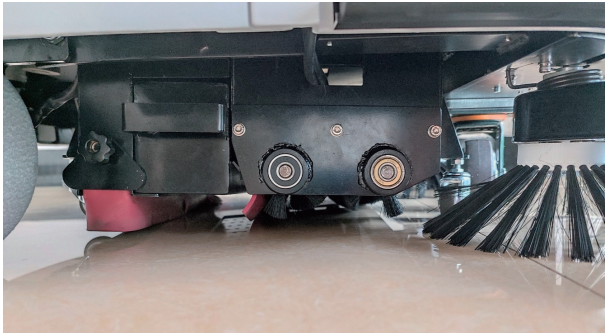

Clean the shell

You are recommended to wipe and clean with a clean cloth once a week.

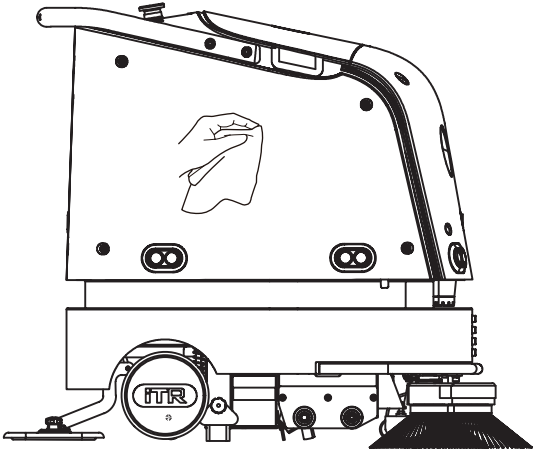

Clean the screen

Please wipe the machine screen with a clean cloth.

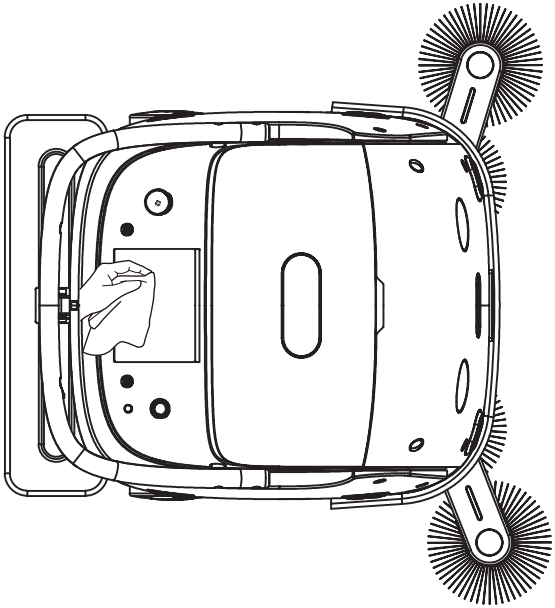

Note:
Machine's screen is an electronic product. Please keep away from water.

Clean the sensor

Lidar:

Please gently wipe the lidar with a clean cloth to ensure that the lidar surface is free of dirt.

Ultrasonic sensor:

User can selectively wipe the ultrasonic sensor according to the use of the machine. Please gently wipe the ultrasonic sensor with a clean cloth to ensure that the surface of the ultrasonic sensor is free of dirt.

Binocular camera:

Please gently wipe the binocular camera with a clean cloth to ensure that the surface of the binocular camera is free of dirt.

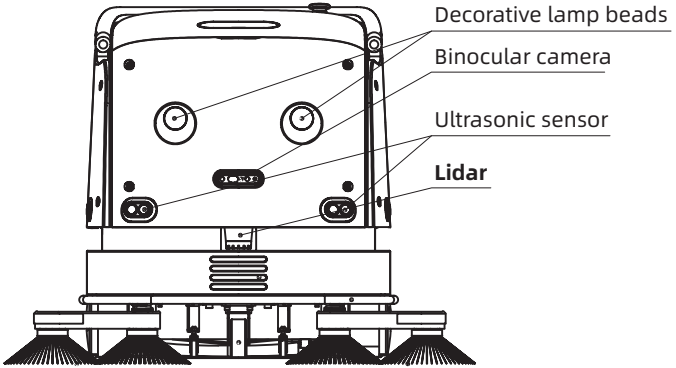

Machine storage

Please store the machine in a dry and cool place.

Replace battery

iTR recommends you do not replace the battery by yourself. Please contact iTR after-sales engineer if necessary.

Maintenance frequency

Parts	Maintenance frequency	Recommended replacement frequency
Dustbin	Depends on dirty condition of dustbin	/
Dust cleaner	Depends on dirty condition of Dust cleaner	1-10 months
Side brush	Depends on wearing situation	2-10 months
Roller brush	Depends on wearing situation	1-2 weeks
Shell	Depends on dirty condition of screen	/
Screen	Depends on dirty condition of screen	/
Sensor	Depends on dirty condition of sensor	/

Canada Statement

This device contains licence-exempt transmitter(s)/receiver(s) that comply with Innovation, Science and Economic Development Canada's licence-exempt RSS(s). Operation is subject to the following two conditions:

1. This device may not cause interference;
2. L'appareil doit accepter tout brouillage radioélectrique subi, même si le brouillage est susceptible d'en compromettre le fonctionnement.

L'émetteur/récepteur exempt de licence contenu dans le présent appareil est conforme aux CNR d'Innovation, Sciences et Développement économique Canada applicables aux appareils radio exempts de licence. L'exploitation est autorisée aux deux conditions suivantes :

1. L'appareil ne doit pas produire de brouillage;
2. L'appareil doit accepter tout brouillage radioélectrique subi, même si le brouillage est susceptible d'en compromettre le fonctionnement.

The device meets the exemption from the routine evaluation limits in section 2.5 of RSS 102 and compliance with RSS-102 RF exposure, users can obtain Canadian information on RF exposure and compliance.

Le dispositif rencontre l'exemption des limites courantes d'évaluation dans la section 2.5 de RSS 102 et la conformité à l'exposition de RSS-102 rf, utilisateurs peut obtenir l'information canadienne sur l'exposition et la conformité de rf.

This transmitter must not be co-located or operating in conjunction with any other antenna or transmitter. This equipment should be installed and operated with a minimum distance of 20 centimeters between the radiator and your body.

Cet émetteur ne doit pas être Co-placé ou ne fonctionnant en même temps qu'aucune autre antenne ou émetteur. Cet équipement devrait être installé et actionné avec une distance minimum de 20 centimètres entre le radiateur et votre corps.

FCC Statement

This equipment has been tested and found to comply with the limits for a Class B digital device, pursuant to part 15 of the FCC Rules. These limits are designed to provide reasonable protection against harmful interference in a residential installation. This equipment generates, uses and can radiate radio frequency energy and, if not installed and used in accordance with the instructions, may cause harmful interference to radio communications. However, there is no guarantee that interference will not occur in a particular installation. If this equipment does cause harmful interference to radio or television reception, which can be determined by turning the equipment off and on, the user is encouraged to try to correct the interference by one or more of the following measures:

—Reorient or relocate the receiving antenna.
Increase the separation between the equipment and receiver.
—Connect the equipment into an outlet on a circuit different from that to which the receiver is connected.
—Consult the dealer or an experienced radio/TV technician for help.

This device complies with FCC radiation exposure limits set forth for an uncontrolled environment. This equipment should be installed and operated with minimum distance of 20 cm between the radiator and your body.

This device complies with Part 15 of the FCC Rules. Operation is subject to the following two conditions:
(1) this device may not cause harmful interference, and
(2) this device must accept any interference received, including interference that may cause undesired operation.

Any changes or modifications not expressly approved by the party responsible for compliance could void the user's authority to operate the equipment.

Contact us

Sales hotline：+86-13958085776/+86-13567194090
After-sales hotline：+86-17316928285
Fax：+86-0571-87837189
Email：service@it-robo.com
Website：www.it-robo.com

Please scan QR code,and follow **iTR official** account

iTR

—Serve for other,then get honor—

IT-ROBOTICS Technology Co., Ltd.

Address: Room 203, Main Building of Jieli Building, No.135 of Jichang Road, Shangcheng District, Hangzhou, Zhejiang

Tel: +86-0571-87032179

Fax: +86-0571-87837189

Sales hotline: +86-13958085776 / +86-13567194090

Email: it@it-robo.com

Website:www.it-robo.com