Model:9308

Thank you for purchasing our product. This instruction manual is part of the product and is designed to provide you with important information regarding the safe and proper use of the product. Please read this manual carefully before using the product and keep it handy for future reference. Please use the product only as described and for its intended purposes.

INTENDED USE

This electronic appliance is intended for time, humidity and temperature display and the described additional features. Any other use or modification of the electronic appliance does not comply with the intended uses. The manufacturer is not liable for damages caused by improper use or misuse.

PRODUCT DESIGN OVERVIEW

Display

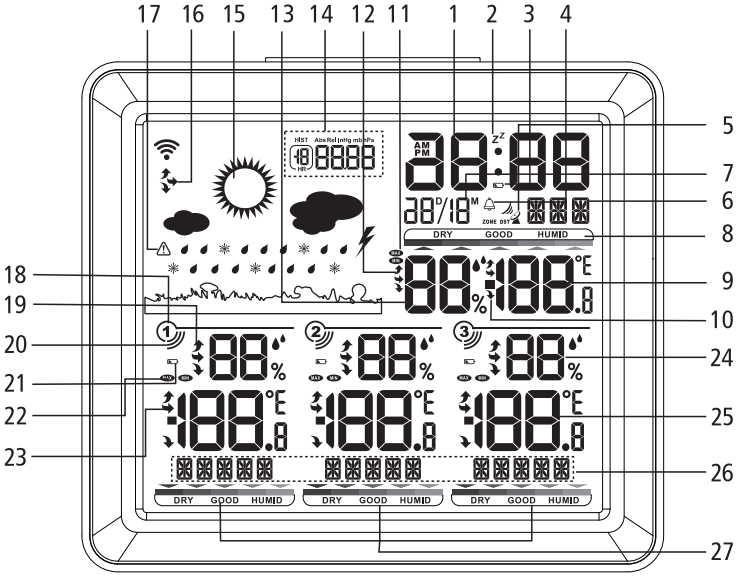

1. Time display
2. Snooze symbol
3. Low battery indicator of main station
4. Alarm sound symbol
5. Radio tower symbol
6. Day of the week
7. Date (day / month)
8.Indoor comfort level display
9. Temperature display of main station
10. Temperature trend symbol of main station
11. MAX/MIN symbol of main station
12. Humidity trend symbol of main station
13. Humidity display of main station
14. Barometer display
15. Weather icon
16. Barometer trend symbol

17. Low temperature warning
18. Channel 1, 2, 3 reception
19. Channel 1, 2, 3 temperature trend
20. Channel 1, 2, 3 reception icon
21. Sensor 1, 2, 3 low battery indication
22. Channel 1, 2, 3 MAX/MIN symbol
23. Channel 1, 2, 3 humidity trends
24. Channel 1, 2, 3 humidity display
25. Channel 1, 2, 3 temperature display
26. Room name (senor 1, 2, 3)
27. Channel 1, 2, 3 comfort level indicator

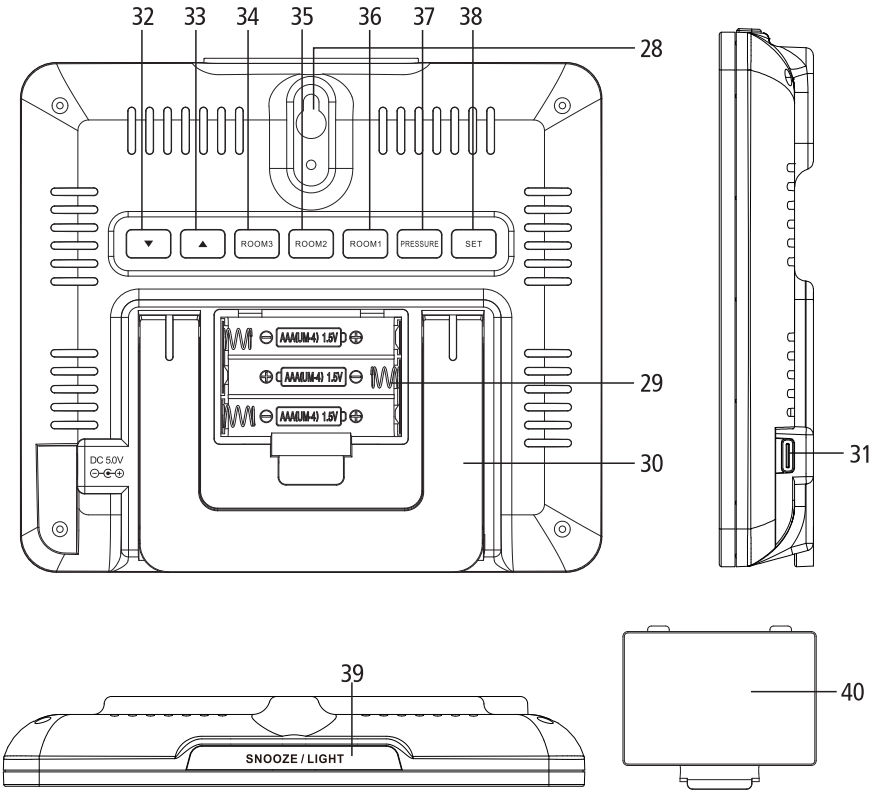

28. Hole for wall mounting
29. Battery compartment
30. Stand
31. Type C Interface
32. ▼ DOWN button
33. ▲ UP button
34. ROOM 3 button
35. ROOM 2 button
36. ROOM 1 button
37. Pressure button
38. SET button
39. SNOOZE/LIGHT button
40. Battery compartment cover

Outdoor Sensor

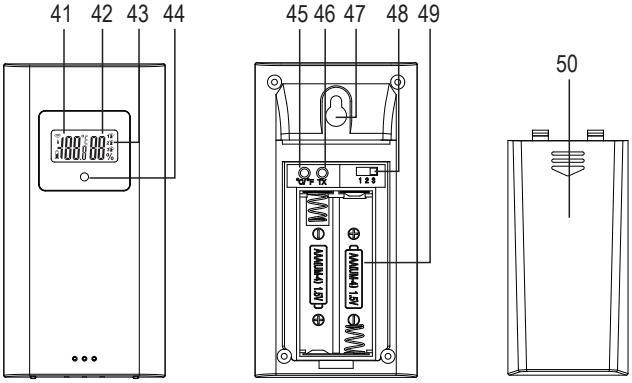

41. Temperature display
42. Humidity display
43. Selected channel
44. LED operating indicator
45. °C/°F button
46. TX button
47. Hole for wall mounting
48. Channel selection switch
49. Battery compartment
50. Battery compartment cover

TECHNICAL DATA

Main Station

Temperature measurement range: 0°C to 50°C
32°F to 122°F
Humidity measurement range: 20% to 95%
Radio-controlled clock: WWVB (US) / DCF77 (DE)
Frequency band: 60 kHZ (WWVB) / 77.5 kHZ (DCF77)
Batteries: 3 x 1.5V R03/LR03 (size AAA)

Main Adapter

Input voltage: 100-240V~
Input AC frequency: 50/60Hz
Output voltage: 5.0V ⎓
Output current: 1.0A
Output power: 5.0W

Outdoor Sensor

Temperature measurement range: -40°C to 60°C
-40°F to 140°F
Humidity measurement range: 20% to 95%
Wireless range: max. 100m (open area, no obstacles)
Batteries: 2 x 1.5V R03/LR03 (size AAA)
Waterproof level: IPX4

SCOPE OF DELIVERY

1 Main station
3 Outdoor sensors
1 Power cable
1 Set of operating instructions
4 Screws
4 Dowels

SAFETY INSTRUCTIONS

Important Safety Information for Users

⚠ WARNING! RISK OF INJURY!

Persons lacking physical, sensory or mental abilities or lack of experience and knowledge should be supervised or instructed by the person who knows the safety use of the device.
Cleaning and maintenance of the device should not be operated by children without supervision.
Keep packaging films out of the hands of children. There is a danger of suffocation.

Important Safety Information for Mains Supply

⚠ WARNING! RISK OF POWER

Before using the product, verify that the device (including, but not limited to, the mains supply and cable connection) isn't damaged. Never operate a damaged product.
Before using the product, make sure that the available mains voltage matches the operating voltage (100-240V~, 50/60Hz).
Make sure to plug the product into an easily accessible socket that can be easily reached in case of an emergency.
Pull out the mains adapter from the socket when it needs to be switched off completely.

SETTING UP

ATTENTION:

Do not expose the outdoor sensor or main station to direct sunlight. Place them on a horizontal, level surface or mount them on the vertical wall.
Make sure to put outdoor sensors under awnings to protect them from rain and direct sunlight.
The main station can be hung on a wall using the hole (23) on the back, or placed on a horizontal, level surface by flipping out the stand (26).

Notes: Main station is designed for indoor use only.

Power on

1. Place the main station and 3 outdoor sensors on a flat, level surface.
2. Connect the power supply and insert 3 new AAA batteries into the back of the main station. You will hear a short beep and see the weather icon blink. Press the " ▼ " button (32) or " ▲ " button (33) to set a forecast based on TV or internet data, which can help improve the accuracy of the weather forecast.Alternatively, you can press the "**PRESSURE**" button (37) to skip this step and set the weather manually later (refer to the Weather Forecast & Barometer Setting).
3. Insert 2 new AAA batteries into the battery compartment of the 3 outdoor sensors.
4. Connection process: The main station will automatically search for signals from the 3 outdoor sensors. This process may take a few minutes. The symbol (20) will blink under each outdoor channel symbol (18) during connection. If the signal is successfully received, the symbol (20) will stop blinking and display permanently.
5. Reception process: The radio tower symbol (5) will blink on the display as the main station searches for the WWVB (US) / DCF77 (DE) radio signal. This process may take 3-7 minutes. During the reception process, only the "SNOOZE/LIGHT" button (39) will function. If the radio signal reception is successful, the time (1), day of the week (6), and date (7) will be automatically set, and the radio tower symbol (5) will stop blinking and permanently appear on the display. If reception is unsuccessful and takes more than 7 minutes, the radio tower symbol (5) will disappear. In this case, you can set the time manually (refer to the Basic Settings).

During daylight-saving time, "DST" will appear on the display below the radio tower symbol (5)

Manually Set Outdoor Sensor

Open the battery compartment of the outdoor sensor, press the "TX" button (46) to transmit the measured data from the sensor to the main station. The LED light (44) will blink.

Press the "°C/°F" button (45) to select the temperature unit Celsius (°C) or Fahrenheit (°F).

Notes:

1. Recent data backup will be saved when the batteries of the main station are installed. When you unplug the adapter, the storage setting value will not be deleted.

2. Do not move the main station or the outdoor sensors during the signal connection and reception process.
3. The sensors must be set up within a maximum of 100m from the main station with no obstacles.

TROUBLESHOOTING TIPS

Signal Connection Issues

If the main station does not receive an outdoor sensor signal within 3 minutes, it will stop searching. The symbol (20) will disappear, and the corresponding channel will show values of "--%" and "--.-℃".

To re-connect the signal of a sensor, follow these steps:

1. Check the batteries of the sensor. If they are drained or weak, replace them with new ones. Alternatively, you can remove and reinsert the batteries.
2. Move the sensor closer to the main station.
3. Press and hold the corresponding "ROOM" button (34/35/36) for a few seconds until the symbol starts blinking again. The main station will start searching for the outdoor sensor signal, regardless of whether the signal from the outdoor sensor was received or not.

If the values displayed on the main station and the sensors are different, you can try the following steps to troubleshoot:

1. Remove the batteries from the corresponding sensor.
2. Press and hold the corresponding "ROOM1/2/3" button on the back of the main station until the signal reception icon (20) starts blinking.
3. Press and hold the corresponding "ROOM1/2/3" button (34/35/36) again until the value for the corresponding sensor disappears from the display.
4. Install new batteries in the corresponding sensor and press the "TX" button above the battery compartment.

Note: If the sensor value still does not appear on the main station, repeat the above steps 2-3 times or move the sensor closer to the main station.

RCC Signal Reception Issue

The automatic clock signal reception function (radio control) of the product may be affected by interference from signals in the end user's surrounding environment as well as too far from the signal transmission tower, which may result in not receiving the signal and unable to automatically adjust the time. In this case, the user needs to manually follow the steps in the instruction manual to set the clock and date.

Several factors can interfere with the reception of the RCC signal:

1. Devices such as computers, telephones, radios, and televisions can emit electromagnetic radiation that may affect signal reception.
2. Structural factors, such as reinforced concrete walls, thick brickwork, or long distances between units, can also interfere with signal reception. Strong building insulation (such as metal building materials), nearby mountains, or atmospheric interference can also be factors.
3. Low temperatures (below 0 C) can negatively impact the battery performance of the outdoor sensor, thus affecting wireless transmission..

Manually Activating RCC Signal Reception

RCC radio signal reception can be restarted manually by pressing and holding the " ▼ " button (32) for seconds until the radio tower symbol (5) start blinking on the display and the main station will start searching the **RCC** radio signal. If reception fails, the radio tower symbol (5) will disappear.

Switch on/off the Automatically WWVB Radio Signal Reception

The main station will attempt to receive the WWVB radio signal at 01:00, 02:00 and 03:00 every day. If the radio signal reception remains unsuccessful, the main station will attempt to receive the signal again at 04:00 and 05:00, and correct the time automatically if reception is successful. If you don't need this function, press and hold the " ▲ " button (33) and " ▼ " button (32) together for seconds to turn it off, until only the radio wave symbol display permanently. The main station will no longer search and receive the WWVB radio signal. It can be turned back on by once again pressing and holding the " ▲ " button (33) and " ▼ " button (32) together for seconds, until the radio wave symbol disappears.

Settings

Basic Settings

Press and hold the "SET" button (38) for 3 seconds to change the basic settings.
Press the "▲" UP button (33) and "▼" DOWN button (32) to change the respective blinking value.

TIP : Pressing and holding the "▲" UP button (33) and "▼" DOWN button (32) will quickly scan ahead or back through the numbers.

ATTENTION: When no buttons are pressed for approx. 30 seconds, the main station will return to normal time displaying mode.

Briefly pressing the "SET" button (38) will confirm the setting and switch to the next option in the clock settings.
This allows you to change the following settings in sequence.

- **Hour**
- **Minute**
- **Clock Format**

select from 24Hr or 12Hr
24Hr indicates 24-hour format (0:00 – 23:59)
12Hr indicates 12-hour format (1:00 – 12:59). In 12Hr mode, the time before 12:00 o'clock at noon will show AM in the display. The time from 12:00 o'clock in the afternoon until 11:59 at night will show PM in the display

- **Year**
- **Month**
- **Date**
- **Time Zone:**

!Note: Once the WWVB / DCF signal is detected, the main station will show the current time, date and day of the week.

If you are in an area where the WWVB/DCF radio signal can be received, but the local time differs from the received signal time, you can use the time zone setting to display the current local time on the clock. For example, if the local time in your area is 14:00 and the received signal time is 15:00, it means there is a time difference of -1 hour between your area and the transmitting tower area. In this case, you can adjust the time zone to -01, and the main station will display the local time of 14:00 after receiving the radio signal.

- **Language Setting**

Display the weekday (1) below the time display. It will flash and can be changed by pressing the " ▲ " button (33) and " ▼ " button (32) in the following sequence: GER (German), FRE (French), ITA (Italian), SPA (Spanish), DAN (Dutch), SWE (Swedish), and ENG (English). The default language for the DCF version is German, while the default language for the WWVB version is English.

- **Backlight**

Press any button to briefly activate the backlight when using battery power. The backlight will last for approximately 3 minutes. When the device is powered by the adapter, the backlight will remain on continuously. There are three levels of backlight to choose from.

- **Weather Forecast & Barometer Setting**

The main station computes the weather forecast based on changes in the barometer. Since no data related to barometric pressure changes is available when starting the unit, the weather forecast will be random at this time. The main station will be able to compute the forecast after a few days.

To enter the weather forecast and barometer setting mode, press and hold the "PRESSURE" button (37) for 3 seconds. Use the " ▲ " button (33) and " ▼ " button (32) to change the respective blinking value. Briefly press the "PRESSURE" button (37) to confirm the setting and switch to the next option. This allows you to change the following settings in sequence.

- **Weather forecast icon**

The main station calculates a weather forecast for the next 12 hours based on the barometer trend. This forecast cannot be compared to that of professional weather services supported by satellites and high-performance computers, but it provides an approximate indication of current developments. The graphic display cannot be set manually.

Available graphic forecasts are:

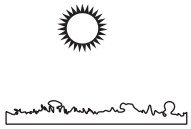	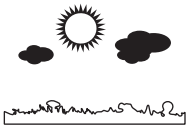		
SUNNY	CLOUDY	OVERCAST	DRIZZLE
HEAVY RAIN	STORMY	SNOW	

Temperature unit: Celsius (°C) or Fahrenheit (°F)

- **Barometer unit:** mb / hPa or inHg
- **Barometer value**
- Before setting the barometer value, please check the relative or the absolute pressure (refer to the Barometer).

The setting range of the relative is 849 ~ 1050 mb/hPa.

TIP: Pressing and holding the "▲" UP button (33) and "▼" DOWN button (32) will quickly scan ahead or back through the numbers.

ATTENTION: If no buttons are pressed for approximately 30 seconds, the main station will return to normal time displaying mode.

Alarm & Snooze

- **Alarm Setting**

In normal mode, press the 'SET' button briefly to display the alarm on/off status. The default status of the alarm is 'off', and the default alarm time is 06:00. Press the " ▲ " button (33) or " ▼ " button (32) to turn the alarm on/off. When the alarm is on, the alarm symbol (4) and alarm time will be displayed. When the alarm is off, the main station will display "OFF".

ATTENTION: When no buttons are pressed for approximately 5 seconds in this mode, the main station will return to normal time displaying mode.

To enter the alarm setting mode, press and hold the "SET" button (38) for several seconds until the alarm hour flashes. Use the " ▲ " button (33) or " ▼ " button (32) to set the hour.

Once the hour is set, press the "SET" button (38) again to switch to minute setting. The alarm minute will flash, and you can set it using the " ▲ " button (33) or " ▼ " button (32).

Confirm your settings by pressing the "SET" button (38) twice, and the display will return to normal time display mode.

ATTENTION: Note that if no buttons are pressed for approximately 30 seconds in this mode, the main station will automatically return to normal time display mode.

- **Snooze**

Press the "SNOOZE/LIGHT" button (39) when the alarm sounds to briefly deactivate the alarm. The bell symbol (4) and the snooze symbol (2) will blink on the display. After 5 minutes, the alarm will sound again. The snooze function can be repeated in 7 times. Press any buttons except the "SNOOZE/LIGHT" button (39) to turn the alarm sound off. The alarm will remain activated for the following day.

Information in base mode

Temperature, Humidity & Barometer Trend

The temperature trend symbol will appear beside temperature, when the continuous increase (or decrease) 1 ℃ or more within an hour and will maintain the direction for one hour even without any further change.

The humidity trend symbol will appear beside humidity, when the continuous increase (or decrease) exceeds 5% or more within an hour and will maintain the direction for one hour even without any further change.

The barometer trend symbol will appear beside weather forecast icon and as rising (or dropping), when the barometer changes by 1hPa or more within an hour and will maintain the direction for one hour even without any further change.

If the temperature, humidity or barometer keeps the same data (no more than above corresponding value) for more than 1 hour, trend symbol will display.

Max/Min Values

Press the " ▲ " UP button (33) to check the maximum values for temperature & humidity of station and outdoor sensors. The symbol MAX display on the station. Briefly press the " ▲ " UP button (33) again to show the minimum value with symbol MIN.

To delete the max/min values, press and hold the " ▲ " UP button (33) for 3 seconds at the max/min viewing and the stored values are clear up and new values start record.

Barometer

Press the "PRESSURE" button (37) to check the passed 12 hours barometer value.
Press the " ▼ " DOWN button (32) to select the relative (Rel) or absolute (Abs) pressure. The default setting is absolute pressure.

Comfort Level Rating

Based on the humidity and temperature, the product will rate with the following key:

TOO DRY: humidity below 30%
DRY: humidity between 31% to 44%
COMFORT: humidity between 45% to 65% and temperature between 20℃ to 25℃
WET: humidity between 66% to 84%
TOO WET: humidity higher than 85%

Low Battery Indicator

If the battery symbol (3) (21) appears, the batteries should be replaced as soon as possible. Please refer to the instructions in section Starting the Outdoor Sensor / Changing Batteries and Starting the Main Station / Changing Batteries.

Channel Name Setting

Setting Pre-set Names

The sensors can be placed in different rooms or outdoors. It is possible to assign a name to each sensor on the main station at (26). For example, a sensor placed in the bathroom could be named BATH. When setting the names, it is possible to select one of the pre-set names: BATH, BEDRM, KID1, KID2, YARD.

Language	GERMAN	FRENCH	ITALIAN	SPANISH	DUTCH	SWEDISH	ENGLISH
Pre-set Name 1	BAD	BAIN	BAGNO	BANO	BADEV	BADRM	BATH
Pre-set Name 2	BETT	SOMML	SONNO	DORMI	SOEVN	SOEMN	BEDRM
Pre-set Name 3	KIND1	ENF1	BAMB1	NINO1	BARN1	BARN1	KID1
Pre-set Name 4	KIND2	ENF2	BAMB2	NINO2	BARN2	BARN2	KID2
Pre-set Name 5	GARTN	JARDN	GIARD	JARDN	HAVE	TRADG	YARD

To select a name for channel 1, press the "ROOM 1" button (36) to view the different pre-set names. If you wish to select one of the names, wait for 5 seconds until the selected name no longer blinks. The name is now selected. Select the names for the other channels in the same way

Setting New Names

It is also possible to enter new name with up to 5 characters each. Up to 5 new names can be set. The newly set name will replace the previously pre-set name.
To set a new name, the letters A-Z, the special characters _ ,), (, +, --, *, /, ', and the numbers 0-9 are available.
To set a new name for channel 1, please proceed as follows:
Press the "ROOM 1" button (36) to choose the pre-set name which you want to re-name and then immediately press the " ▲ " UP button (33) to enter into the naming sensor mode. There is a symbol "_" flashing. Select the character by pressing the " ▲ " UP button (33) or " ▼ " DOWN button (32).
When the desired character appears, press the "ROOM 1" button (36) to confirm your setting and move to the next character. It is possible to delete characters by pressing the "SET" button (38). Once 5 characters have been entered, the display will automatically return to normal time displaying mode. If you have entered less than 5 characters, press the "ROOM 1" button (34) many times until no symbol "_" flashing in the area.
Set the names for channel 2 and 3 in the same way.

FCC Statement

This device complies with part 15 of the FCC Rules. Operation is subject to the following two conditions:

(1)This device may not cause harmful interference, and

(2)this device must accept any interference received, including interference that may cause undesired operation.

This equipment has been tested and found to comply with the limits for a Class B digital device, pursuant to part 15 of the FCC Rules.

These limits are designed to provide reasonable protection against harmful interference in a residential installation.

This equipment generates, uses and can radiate radio frequency energy and, if not installed and used in accordance with the instructions,

may cause harmful interference to radio communications. However, there is no guarantee that interference will not occur in a particular installation.

If this equipment does cause harmful interference to radio or television reception, which can be determined by turning the equipment off and on,

the user is encouraged to try to correct the interference by one or more of the following measures:

Reorient or relocate the receiving antenna.

.Increase the separation between the equipment and receiver.

.Connect the equipment into an outlet on a circuit different from that to which the receiver is connected.

.Consult the dealer or an experienced radio/TV technician for help.

Cations to this device not explicitly approved by manufacturer could Caution:

.Any changes or modivoid your authority to operate this equipment.RF Exposure Information

.The device has been evaluated to meet general RF exposure requirement.

.The device can be used in portable exposure condition without restriction.