AURIOL®

www.lidl-service.com

WEATHER STATION

DM8835

US-EN

SWEATHER STATION

Usage and safety instructions

IAN 310253

US

US-EN Usage and safety instructions

Table of contents

Table of contents ..... - 1 -
Preliminary note ..... - 2 -
Intended use ..... - 2 -
Scope of delivery ..... - 2 -
Specifications ..... - 2 -
Weather station ..... - 2 -
Outdoor sensor ..... - 2 -

⚠ IMPORTANT SAFETY INSTRUCTIONS ..... - 2 -
Important safety information for users ..... - 2 -
Important safety information for the batteries ..... - 3 -
Display and control panel ..... - 3 -
Outdoor sensor ..... - 4 -
Securely placing or mounting the weather station ..... - 5 -
Securely placing or mounting the outdoor sensor ..... - 5 -
Setup ..... - 5 -
Time zone adjustment ..... - 6 -
Reception problems ..... - 6 -
Restart/turn off radio reception ..... - 6 -
Light ..... - 6 -
12/24-hour time format ..... - 6 -
Temperature unit ..... - 6 -
Speed setting ..... - 6 -
Basic settings ..... - 6 -
Location table ..... - 7 -
Sunrise, sunset, moonrise and moonset times ..... - 8 -
Moon phase ..... - 8 -
Alarm ..... - 8 -
Snooze ..... - 8 -
Weather forecast ..... - 8 -
Barometer ..... - 9 -
12-hour air pressure history ..... - 9 -
Outdoor sensor/channel setting ..... - 9 -
Outdoor temperature tendency ..... - 10 -
Indoor humidity ..... - 10 -
Maximum and minimum values ..... - 10 -
Battery level indicator ..... - 10 -
Restart (RESET) ..... - 10 -
Cleaning instructions ..... - 10 -
Disposal of the electronic appliance ..... - 10 -
Disposal of the batteries ..... - 10 -
3 year limited warranty ..... - 10 -
Customer Service ..... - 11 -
Distributed by ..... - 11 -

WEATHER STATION

Preliminary note

READ ALL INSTRUCTIONS BEFORE USING!

Congratulations on the purchase of your new weather station. You have chosen a high quality product. The instruction manual is part of the product- it contains important information about safety, use and disposal. Read the manual with all usage and safety notes before using the weather station. Only use the weather station in the intended way and for the intended applications. If the weather station is given to someone else, include all documentation with the weather station. Please keep the packaging and the instruction manual for future reference.

Intended use

This electronic appliance is intended for time display and the described additional features. Any other use or modification of the electronic appliance does not comply with the intended uses. The manufacturer is not liable for damages caused by improper use or misuse. The device is not intended for commercial use.

Scope of delivery

- 1 x weather station
- 3 x battery 1.5 V AAA R03/LR03
- 1 x outdoor sensor
- 2 x battery 1.5 V AAA R03/LR603
- 3 x anchor/dowel
- 3 x screws
- 1 x instruction manual

Specifications

Weather station

- Operating temperature 32 – 122 °F
- Temperature display: +/- 2 °F
- Battery: 3 x 1.5 V AAA R03 / LR03

Outdoor sensor

- Operating temperature -4 – 122 °F
- Temperature display: +/- 2 °F
- Range: max. 109 yd
- Frequency: 433 MHz
- Transmission power: 0.024 W
- Protection offered by the case (outdoor sensor): IPX4 (Water resistant according to IEC norm 60529)
- Battery: 2 x 1,5 V AAA R03 / LR03

  ⎓ - Symbol for direct current

⚠ IMPORTANT SAFETY INSTRUCTIONS

Important safety information for users

⚠ **WARNING! RISK OF INJURY!**

This device may be used by persons (including **children** over 8 years of age) with reduced physical, sensory or mental abilities or lack of experience and knowledge, if they are supervised or instructed regarding the safe use of the device and understand the dangers that may arise. **Children** may not play with the device. Cleaning and user maintenance of the device may not be performed by children without supervision. Keep packaging films out of the hands of **children**. There is a danger of suffocation.

Important safety information for the batteries

WARNING! **HEALTH HAZARD!**
RISK OF EXPLOSION!

Keep batteries out of reach of small children. If a battery is swallowed, you must seek medical attention immediately. Batteries/rechargeable batteries must always be inserted in the correct polarity. If necessary, clean the battery and device contacts. Never attempt to recharge non-rechargeable batteries. Never short-circuit or attempt to open batteries. Never throw batteries into fire as they may explode.
If the device will not be used for an extended time period, remove the battery and store the device in a dry and dust-free area. Improper use of the battery can lead to explosion or leakage.
If the battery leaks, avoid contact with skin, eyes and mucous membranes. Use gloves. If you are exposed to battery acid, rinse the affected areas with plenty of clean water and immediately seek medical attention. Remove discharged batteries from the device as they present an increased risk of leakage.
Do not use unequal batteries (old and new, Alkaline and carbon, etc.) simultaneously.

SAVE THESE INSTRUCTIONS!

Display and control panel

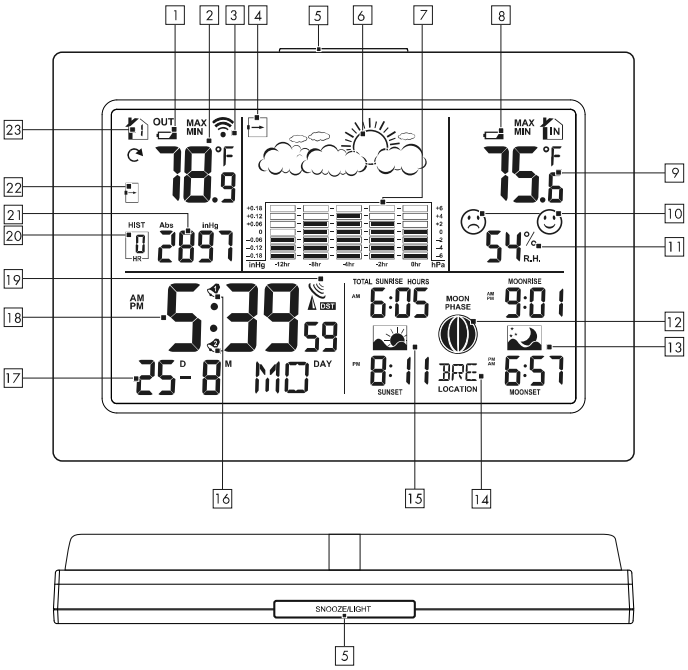

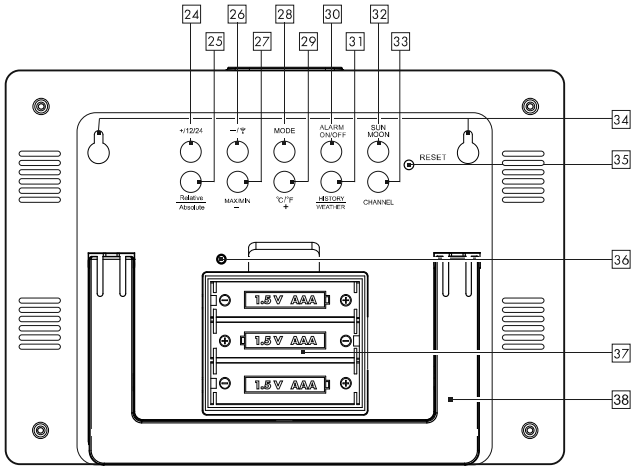

Outdoor sensor

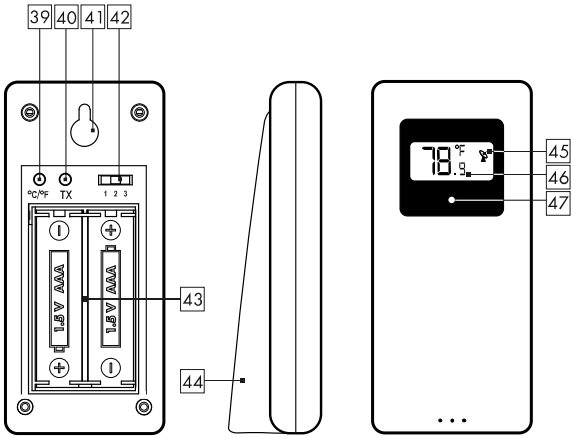

1	Battery indicator	25	RELATIVE/ABSOLUTE-air pressure-button
2	Outdoor temperature	26	-/ ▲ -button
3	Signal of the outdoor sensor	27	MAX/MIN - -button
4	Air pressure tendency	28	MODE-button
5	SNOOZE/LIGHT-button	29	°C/°F + button
6	Weather icon	30	ALARM/ON/OFF -button
7	Air pressure bar	31	HISTORY/WEATHER-button
8	Battery indicator	32	SUN/MOON-button
9	Indoor temperature	33	CHANNEL-button
10	Comfort icon	34	Hole for wall mounting (Weather station)
11	Indoor humidity	35	RESET-button
12	Moon phase	36	Buzzer
13	Moonrise and Moonset	37	Battery compartment (Weather station)
14	Location	38	Foldout stand (Weather station)
15	Sunrise and Sunset	39	°C/°F-button (Outdoor sensor)
16	Alarm symbol	40	TX-button

17	Date (month, day, day of the week)	41	Hole for wall mounting (Outdoor sensor)
18	Time display	42	Channel selection switch (Outdoor sensor)
19	Radio control indicator	43	Battery compartment (Outdoor sensor)
20	Air pressure for previous	44	Stand (Outdoor sensor)
21	Relative / absolute air pressure	45	Radio control indicator (Outdoor sensor)
22	Outdoor temperature tendency	46	Outdoor temperature / channel (Outdoor sensor)
23	Selected channel	47	LED indicator (Outdoor sensor)
24	+/12/24-button		

Securely placing or mounting the weather station

The weather station with outdoor sensor is not designed for operation in rooms with high humidity (i.e. bathroom). Use the included screws and anchors for wall mounting. Make sure that:

- sufficient ventilation is always guaranteed (don't place the device on shelves or where curtains or furniture block the ventilation holes, and ensure that there are at least 4 Inch of space on all sides);
- the device isn't placed on a thick carpet or bed during operation, no direct heat sources (i.e. radiators) influence the device;
- no direct sunlight reaches the device;
- contact with splashing or dripping water must be avoided (don't place any items filled with liquids, i.e. vases, onto or next to the device);
- the device doesn't stand near magnetic fields (i.e. speakers);
- no foreign objects or dust penetrate the housing;
- candles and other open flames must be kept away from this product at all times to prevent the spread of fire

Securely placing or mounting the outdoor sensor

Place the sensor in a location where it is protected from the weather, for example under an awning or carport. The sensor has an IPX4 rating and is therefore protected from water splashes. Use the included screws and anchors for wall mounting. Make sure that:

- the sensor hangs or stands upright;
- sufficient ventilation is always guaranteed (don't place the device on shelves or where curtains or furniture block the ventilation holes, and ensure that there are at least 4 Inch of space on all sides);
- no direct sunlight reaches the device;
- the device doesn't stand near magnetic fields (i.e. speakers);
- no foreign objects or dust penetrate the housing;

Setup

Insert batteries into the outdoor sensor 43 first and then insert batteries into the weather station 37.

Remove the protective film from the weather station and the outdoor sensor. Open the battery compartment of the outdoor sensor **43** and insert the included batteries in the correct polarity. The LED indicator **47** will briefly light up and the display will show the temperature. Close the battery compartment.
Open the battery compartment of the weather station **37** and insert the included batteries in the correct polarity. Close the battery compartment. The weather symbol **6** blinks and the weather station receives the signal from the outdoor sensor. This process may take several minutes to complete. During this time the signal **3** of the outdoor sensor will blink. If reception is successful, the selected channel **23** and the current outdoor temperature **2** will appear. After successful reception of the signal for the outdoor sensor, the reception of the WWVB time signal will begin and the radio control indicator **19** will blink on the display next to the time. All buttons except the **SNOOZE / LIGHT** button **5** are disabled during the reception process. If reception fails after 10 minutes, please set the time manually. The weather station will reattempt reception at 04:00 and 05:00 and, if reception is successful, will correct the set time.

Note: Please do not move the weather station or the sensor during the reception process.

If the reception attempt is successful, the radio control indicator **19** will appear permanently on the display and the correct time, date, day of the week and the times of sunrise, sunset, moonrise and moonset will be set automatically. **DST** will appear on the display next to the radio control indicator **19** during daylight saving time.

Time zone adjustment

If you are in a country, in which the clock displays the wrong time even though it can receive the time signal, please use the time zone adjustment to use your weather station in a time zone other than the standard time zone. Set the difference in hours (- 01 for example) to the desired time zone.
In normal time display mode, press and hold the **MODE** button **28** for 3 seconds. The time zone will blink and can be set by pressing the -/ ▲ -button **26** or the **+/12/24** -button **24**. Press the **MODE**-button **28**, to confirm your setting.
The hours blink and the weather station will display the changed time (for example 1 hour back) after a brief moment.

Reception problems

The time signal transmitter in Fort Collins, Colorado transmits on a frequency of 60 kHz. There are some obstacles and sources of interference, which may substantially hinder reception. If your weather station does not correctly receive the WWVB radio signal, please hang or place the weather station in a different location at your site. Please note that devices such as computers, telephones, radios and televisions may cause electromagnetic radiation which can interfere with the WWVB signal reception. Other possible detriments to reception are: strong building insulation (metal building materials), nearby mountains or atmospheric interference. It may also be necessary to replace the batteries.

Restart/turn off radio reception

Manually restart the radio signal reception by pressing and holding the -/▲-button **26** for 3 seconds.
The radio reception can be turned off by pressing and holding the -/ ▲ -button **26** for 3 seconds. The radio tower symbol **19** will blink. Press and hold the -/ ▲ -button **26** again for 3 seconds during the reception attempt. The radio tower symbol **19** will disappear. The weather station will start a new reception attempt at 04:00 a.m. o'clock and 05:00 a.m. o'clock and if the reception attempt is successful, the manually set time will be corrected.

Light

Briefly activate the backlight by pressing the **SNOOZE/LIGHT**-button **5**.

12/24-hour time format

Select the 12- or 24 hour time format by pressing the **+/12/24** -button **24**. AM will appear on the display in the morning, PM in the afternoon if the 12-hour time format is selected.

Temperature unit

Select the temperature unit Celsius (°C) or Fahrenheit (°F) by pressing the **°C/°F+** -button **29**.

Speed setting

Press and hold buttons to use the speed setting feature when setting numerical values.

Basic settings

The following values can be set: time zone -> hour -> minute -> second -> year -> month -> Date -> week language -> DST (daylight saving time) ON/OFF -> city -> exit. Press and hold the **MODE**-button **28** for 3 seconds while in normal time display mode. The time zone will blink and can be set by pressing the -/▲-button **26** or the **+/12/24** -button **24**. Press the **MODE**-button **28**, to confirm your setting. Set the hours, minutes, seconds, year, month, day, language of the day of the week display (GE=German, FR=French, ES=Spanish, IT=Italian, NE=Dutch, DA=Danish, RU=Russian, EN=English), the daylight saving time DST ON/OFF, your country and your city (see location table) in the same way. After changing the location, it will

take some time for the weather station to update the times for sunrise, sunset, moonrise and moonset.

Location table

New York	NYK	Tampa	TAM	Modesto	MOT
Los Angeles	LAS	Bakersfield	BFD	Birmingham	BHM
Chicago	CHI	Aurora	AUR	Tacoma	TAC
Houston	HTN	Honolulu	HON	Fontana	FTA
Phoenix	PHO	Anaheim	ANA	Rochester	RCT
Pennsylvania	PLA	Santa Ana	SAA	Oxnard	OND
Philadelphia	PLA	Corpus Christi	CCI	Moreno Valley	MVY
San Antonio	SAO	Riverside	RSE	Fayettevile	FTE
San Diego	SDO	Lexington	LTN	Aurora	ARA
Dallas	DAL	St. Louis	SLS	Glendale	GDE
San Jose	SJE	Stockton	STO	Yonkers	YKS
Austin	AUS	Pittsburgh	PIT	Huntington Beach	HBH
Jacksonville	JSE	Saint Paul	SPL	Montgomery	MGY
San Francisco	SFO	Cincinnati	CIN	Amarillo	AML
Columbus	COL	Anchorage	ANC	Little Rock	LRK
Indianapolis	IND	Henderson	HDS	Akron	AKR
Fort Worth	FWH	Greensboro	GSO	Columbus	CLS
Charlotte	CHA	Plano	PLA	Augusta	AUG
Seattle	SEA	Newark	NEW	Grand Rapids	GRS
Denver	DEN	Lincoln	LIN	Shreveport	SPT
El Paso	EPO	Toledo	TOL	Salt Lake City	SLC
Washington, D, C	WDC	Orlando	ORL	Huntsville	HSE
Boston	BOS	Chula Vista	CVA	Mobile	MOB
Detroit	DET	Irvine	IRV	Tallahassee	TAL
Nashville	NAS	Fort Wayne	FWE	Grand Prairie	GPE
Memphis	MEM	Jersey City	JCY	Overland Park	OPK
Portland	POR	Durham	DUR	Knoxville	KVE
Oklahoma City	OCY	Saint Petersburg	SPB	Port St. Lucie	PSL
Las Vegas	LVS	Laredo	LAR	Worcester	WCT
Louisville	LOU	Buffalo	BUF	Brownsville	BSE
Baltimore	BAL	Madison	MAD	Tempe	TEM
Milwaukee	MIL	Lubbock	LUB	Santa Clarita	SCA
Albuquerque	ALB	Chandler	CHA	Newport News	NNS
Tucson	TUC	Scottsdale	SCO	Cape Coral	CCL
Fresno	FRE	Glendale	GLD	Providence	PVE
Sacramento	SAC	Reno	REN	Fort Lauderdale	FLE
Mesa	MES	Norfolk	NOR	Chattanooga	CTA
Kansas City	KCY	Winston -Salem	WSM	Rancho Cucamonga	RCA
Atlanta	ATL	North Las Vegas	NLV	Oceanside	OCE
Long Beach	LBH	Irving	IRV	Santa Rosa	SRA
Colorado Springs	CSS	Chesapeake	CSE	Garden Grove	GGE
Raleigh	RAL	Gilbert	GIL	Vancouver	VCR
Miami	MIA	Hialeah	HIA	Sioux Falls	SFS
Virginia Beach	BBH	Garland	GLD	Ontario	ONT
Omaha	OMA	Fremont	FRM	McKinney	MKY
Oakland	OAK	Arlington	ATN	Elk Grove	EGE
Minneapolis	MIN	Baton Rouge	BRE	Jackson	JKN
Tulsa	TUL	Richmond	RMD	Pembroke Pines	PPS
Arlington	ARL	Boise	BOI	Salem	SAL
New Orleans	NOS	San Bernardino	SBD	Springfield	SFD
Wichita	WIC	Spokane	SKE		
Cleveland	CLD	Des Moines	DMS		

Sunrise, sunset, moonrise and moonset times

After setting your country and city, the weather station will calculate the approximate times for sunrise, sunset, moonrise and moonset.

Note: The calculated times are approximate. Differences can also result from your local terrain and weather.

Briefly display the approximate number of hours of sunlight for the current day by pressing **SUN/MOON**-button **32**. If you wish to see the sunrise or sunset times for another location or another date, press and hold the **SUN/MOON**-button **32** for 3 seconds. The country will blink and can be selected by pressing the **-/▲**-button **26** or the **+/12/24** -button **24**. Confirm your setting by pressing the **SUN/MOON**-button **32**. Set the city, year, month and day in the same way and confirm each setting by pressing the **SUN/MOON**-button **32.**

Moon phase

Your weather station is equipped with a moon phase display. The 8 phases of the moon are:

	New Moon		Full Moon
	Waxing Crescent		Waning Gibbous
	First Quarter		Third Quarter
	Waxing Gibbous		Waning Crescent

Alarm

The weather station has 2 alarms, which can be set separately. Press the **MODE**-button **28** to select alarm 1 or alarm 2. The corresponding alarm symbols will appear. When displaying alarm **1** or alarm **2**, press and hold the **MODE**-button **28**, to enter setting mode. The hours will blink on the display. Set the hours by pressing the **-/▲**-button **26** or the **+/12/24** -button **24** and confirm your setting by pressing the **MODE**-Taste **28**. Set the minutes in the same way. Press the **ALARM/ON/OFF**-button **30** while displaying the alarm you wish to activate. Press the **ALARM/ON/OFF**-button **30**, to activate **(on)** or deactivate **(oF)** the alarm. If alarm **1** is activated the symbol will appear. If alarm **2** is activate the symbol will appear. If no button is pressed within 5 seconds, the weather station will return to normal time display mode.

Snooze

Press the **SNOOZE/LIGHT**-button **5**, to temporarily deactivate the alarm. The bell symbol will blink on the display. After 5 minutes the alarm will sound again. Press any button except **SNOOZE/LIGHT**-button **5** to shut off the alarm.

Weather forecast

Note: The weather station will start the forecast approximately 6 hours after the current weather was entered.

The weather icons show a weather tendency for the next hours and not the current weather.
Should the forecast of your weather station be incorrect, you can adjust the display by pressing and holding the **HISTORY/WEATHER**-button **31** for 3 seconds. The weather icon will blink. You can now select the correct weather icon by pressing the **°C/°F +** -button **29** or the **MAX/MIN-** -button **27**. Confirm your selection by pressing the **HISTORY/WEATHER**-button **31**.

Please note: Set rain or downpour if it is snowing. After confirming your setting by pressing the HISTORY/WEATHER-button 31 the snow symbol will appear if the outdoor temperature is below 32°C.

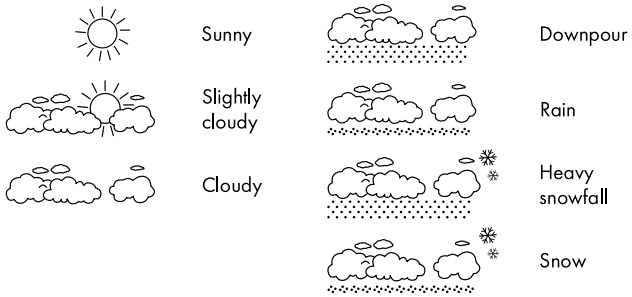

Barometer

Your weather station can show the air pressure tendency **4**.

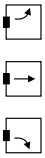

Air pressure rising

Air pressure constant

Air pressure falling

You can also select absolute or relative air pressure by pressing the **Relative/Absolute**-button **25**. Rel. or Abs. will appear on the display.

Note: The weather station measures the absolute air pressure. Your local weather service can supply you with the relative air pressure for your location, which you can input into the weather station.

To change the relative air pressure, press and hold the **Relative/Absolute**-button **25** for 3 seconds. The air pressure value will blink on the display and can be set by pressing the **°C/°F +** -button **29** or **MAX/MIN**-button **27**. Confirm your setting by pressing the **Relative/Absolute**-button **25**.

Select the air pressure unit Hectopascal (hPa) or Inches of mercury (inHg) by pressing and holding the **°C/°F + -button 29** for 3 seconds.

12-hour air pressure history

Press the **HISTORY/WEATHER**-button **31** to view the air pressure history for the last 12 hours.
0 – HR = current air pressure
- 1 HR = air pressure 1 hour ago
-2 HR = air pressure 2 hours ago... and so on

Outdoor sensor/channel setting

You can use the weather station with up to 3 outdoor sensors at the same time.
Open the battery compartment of the outdoor sensor **43** and select a channel (1-3) by using the Channel selection switch **42**. Press and hold the **CHANNEL**-button **33** for 3 seconds or until an audible signal sounds. The weather station will now attempt to receive the signal **3**.
Now press the **TX**-button **40** to manually transmit the temperature from the outdoor sensor to the weather station.
Close the battery compartment. Press the **°C/°F**-button **39** to select **°C**-Celsius or **°F**-Fahrenheit.

Note: The outdoor sensor must be within a maximum distance of 109 yd of the weather station with no obstructions.

If you are using mutliple outdoor sensors: Press the **CHANNEL**-button **33** to select the reception channel.
The rotation symbol ↻ on the display at **23** indicates that the weather station is rotating through channels 1-3.
Only active outdoor sensors are displayed. Press and hold the **CHANNEL**-button **33** to remove unused channels. When adding an additional outdoor sensor, the weather station will detect it automatically. You can also manually transmit the signal by pressing the **TX**-button **40**.

Outdoor temperature tendency

The temperature trend 22 is displayed upon successful reception from the outdoor sensor.

Outdoor temperature rising

Outdoor temperature constant

Outdoor temperature falling

Indoor humidity

The current indoor humidity 11 is shown on the display. The comfort icon 10 can show 3 levels of comfort:

	< 40 % DRY	40 – 60 % COMFORT	> 60 % HUMID
< 20 °C	☹	/	☹
20 – 26°C	☹	☺	☹
> 26 °C	☹	/	☹

Maximum and minimum values

The maximum and minimum temperature and humidity are stored as soon as the batteries are inserted.
Briefly press the Max/Min- -button 27 to display the maximum MAX, minimum MIN and current indoor temperature 9, outdoor temperature 2 and humidity 11 on the display. To delete the maximum and minimum values, press and hold the Max/Min- -button 27 for 3 seconds. An audible signal will sound and the stored values will be deleted. The weather station will immediately restart recording of the values.

Battery level indicator

If the batteries run too low to power the weather station, the outdoor sensor and signal transmission, the battery level indicator 1 will appear on the display. Replace the batteries in all devices as soon as possible. Restart the weather station.

Restart (RESET)

Press the RESET-button 35 to reset the weather station.

Cleaning instructions

Clean the product with a soft, dry and lint-free cloth. A glasses cleaning cloth is ideal.

Disposal of the electronic appliance

This weather station may not be disposed of with normal household waste. Dispose of the unit at an approved disposal facility or at your local recycling centre. Please observe the current rules and regulations when disposing of the appliance. Contact the disposal system if in doubt.

Disposal of the batteries

Please dispose of your batteries properly in containers especially set up at retailers. Batteries do not belong in household waste. Dispose of the batteries at an approved disposal facility or at your local recycling centre. Contact the disposal system if in doubt

3 year limited warranty

What does this warranty cover?

The warranty covers:

- Damage, breakage, or inoperability due to defect.
- Damage not caused by normal wear and tear or failure to follow the safety and maintenance instructions provided in the user manual.

What is not covered by the warranty?

The warranty does not cover damage caused by:

- Normal wear and tear of the product, including fragile parts (such as switches, glass, etc.);
- Improper use or transport;
- Disregarding safety and maintenance instructions;
- Accidents or acts of nature (eg., lightening, fire, water, etc.).
- Tampering with the product (such as removing cover, unscrewing screws etc.)

Consequential and incidental damages are also not covered under this warranty. However, some states do not allow the exclusion or limitation of incidental or consequential damages, so this limitation or exclusion may not apply to you.

What is the period of coverage and warranty resolution?

The warranty is for 3 years from the date of purchase. At our discretion, product will either be refunded or replaced.

What will we not do?

We will not:

- Start a new warranty period upon product exchange;
- Repair product.

How to process the warranty?

To initiate, please:

- Call customer service at 1 (844) 543-5872
- Visit the Website Customer Service Platform at www.lidl.com/contact-us
  or
- Visit a LIDL store for further assistance

To ensure the quickest warranty return process, please have the following available:

- The original sales receipt that includes the date purchased;
- The product and manual in the original package;
- A statement of the problem.

What must you do to keep the warranty in effect?

- Retain the original receipt;
- Follow all product instructions;
- Do not repair or modify the product.

How does state law relate to this warranty?

This warranty gives you specific legal rights, and you may also have other rights which vary from state to state. All implied warranties are limited by the duration and terms of this warranty. Some states do not allow limitations on how long an implied warranty lasts, so the above limitation may not apply to you.

Visit www.lidl-service.com to download this and many other manuals, product videos and software.

FCC Statement

This device complies with Part 15 of the FCC rules. Operation is subject to the following two conditions: 1) this device may not cause harmful interference, and 2) this device must accept any interference received, including interference that may cause undesired operation.

Note: This equipment has been tested and found to comply with the limits for a Class B digital device, pursuant to part 15 of the FCC Rules. These limits are designed to provide reasonable protection against harmful interference in a residential installation. This equipment generates uses and can radiate radio frequency energy and, if not installed and used in accordance with the instructions, may cause harmful interference to radio communications. However, there is no guarantee that interference will not occur in particular installation. If this equipment does cause harmful interference to radio or television reception, which can be determined by turning the equipment off and on, the user is encouraged to try to correct the interference by one or more of the following measures:

--Reorient or relocate the receiving antenna.

--Increase the separation between the equipment and receiver.

--Connect the equipment into an outlet on a circuit different from that to which the receiver is connected.

--Consult the dealer or an experienced radio/TV technician for help.

Changes or modifications not expressly approved by the party responsible for compliance could void the user's authority to operate the equipment.

FCC Radiation Exposure Statement

This device complies with FCC RF radiation exposure limits set forth for an uncontrolled environment. This transmitter must not be co-located or operating in conjunction with any other antenna or transmitter.