BOYA

Ultracompact 2.4GHz Dual-channel Wireless Microphone System

2.4GHz 迷你双通道无线麦克风系统

BY-XM6 RXU
BY-XM6 RXD
WMic5-RXD
WMic5-RXU
WMX-2-L-RX
WMX-2-C-RX

User Manual

用户手册

General Introduction

BOYA BY-XM6 systems are incredibly lightweight, ultracompact and easy-to-use wireless microphone systems for up to 2 people.

The microphone delivers exceptional, broadcast-quality sound to DSLR, mirrorless and video cameras, smartphones, tablets, computers, etc.

It is ideal for content creation, vlogging, mobile journalism, and more.

Available Kits

Model	In the box	
BY-XM6-S1	1×BY-XM6 TX	1×BY-XM6 RX
BY-XM6-S2	2×BY-XM6 TX	1×BY-XM6 RX
BY-XM6-S3	1×BY-XM6 TX	1×BY-XM6 RXD
BY-XM6-S4	2×BY-XM6 TX	1×BY-XM6 RXD
BY-XM6-S5	1×BY-XM6 TX	1×BY-XM6 RXU
BY-XM6-S6	2×BY-XM6 TX	1×BY-XM6 RXU

Product Structure

Wireless Transmitter BY-XM6 TX

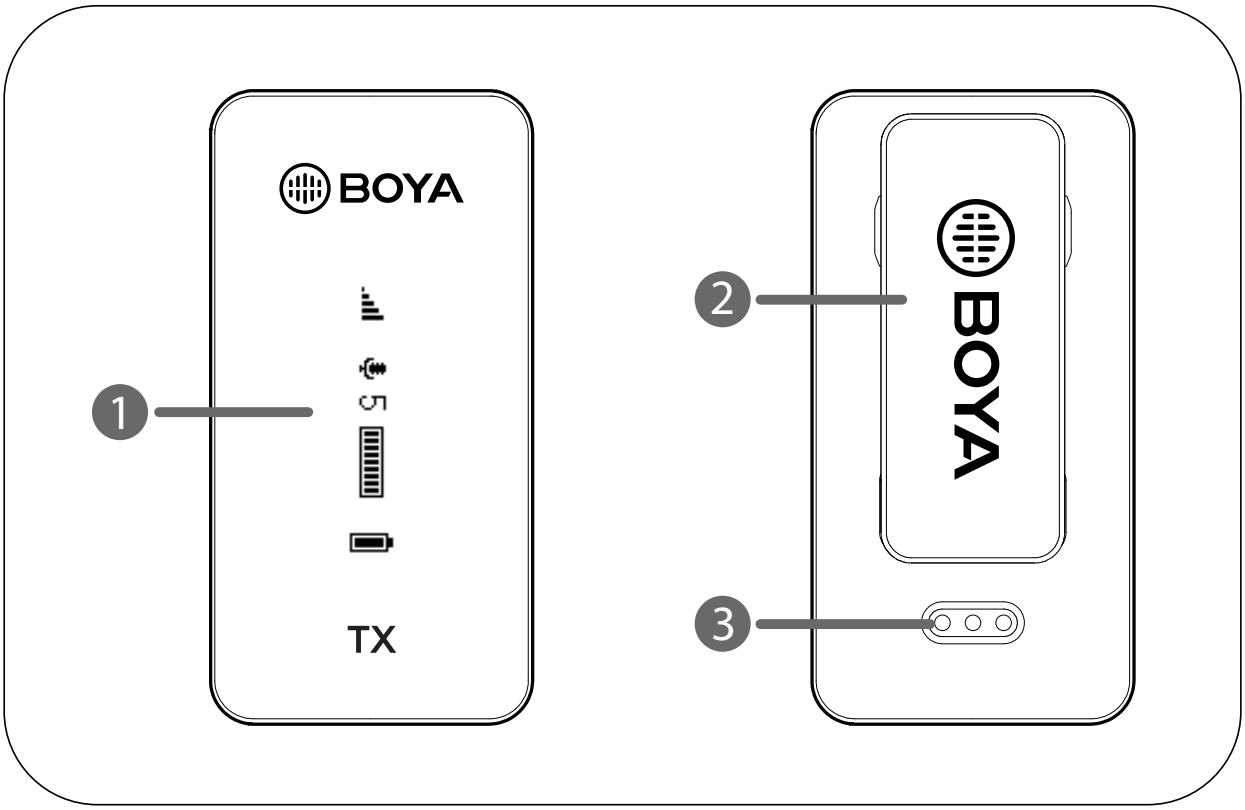

1. OLED display

- For more details, please refer to “OLED Display Operation Guide”.

2.Belt clip

3.Charging contacts

4. Power/Mute button

Function	Operation
Power ON	Long press
Power OFF	
Mute ON	Short press
Mute OFF	

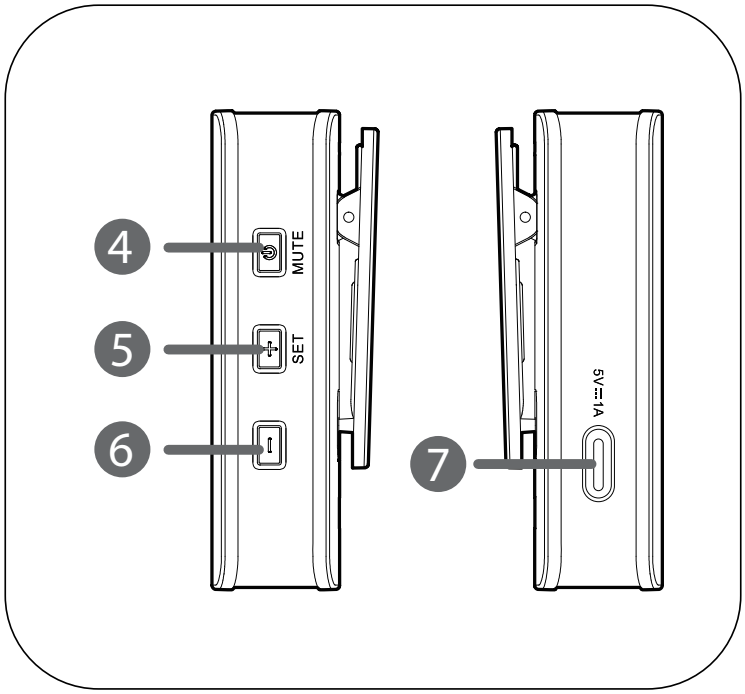

5. +/SET button

Function	Operation
+	On home screen, short press to adjust mic gain.
	On menu screen, short press to select different functions or values shown on the display.
SET	On home screen, long press to enter the menu screen.
	On menu screen, long press to enter the displayed menu. Then, long press again to confirm your option.

6. - button

- On home screen, short press to adjust mic gain.
- On menu screen, short press to select different functions or values shown on the display;
- long press to return to home screen.

7. USB-C charging port (DC 5V)

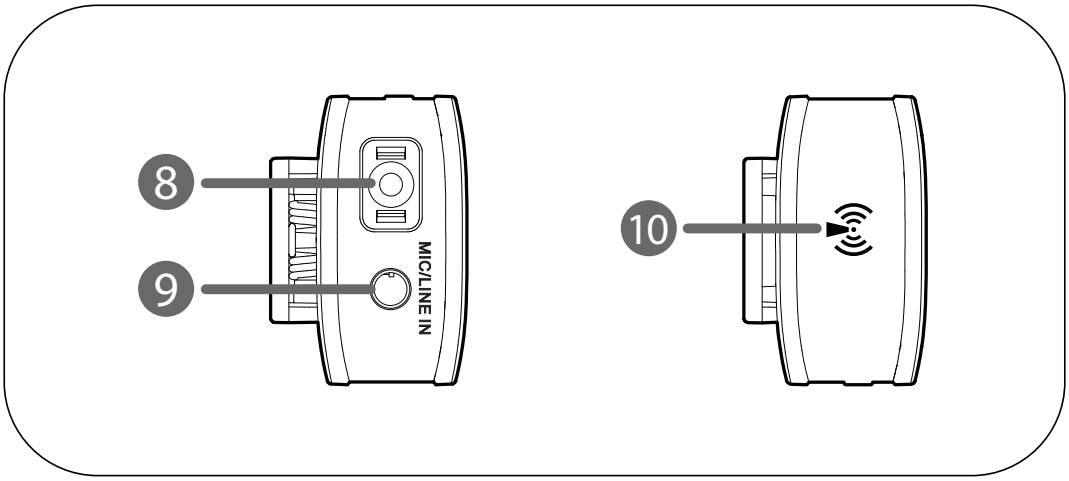

8. Built-in microphone

9. MIC/LINE IN jack

- It can be connected to the supplied 3.5mm lavalier microphone, or other 3.5mm TRS microphones or line-in devices.

10. Antenna

Wireless Receiver BY-XM6 RX

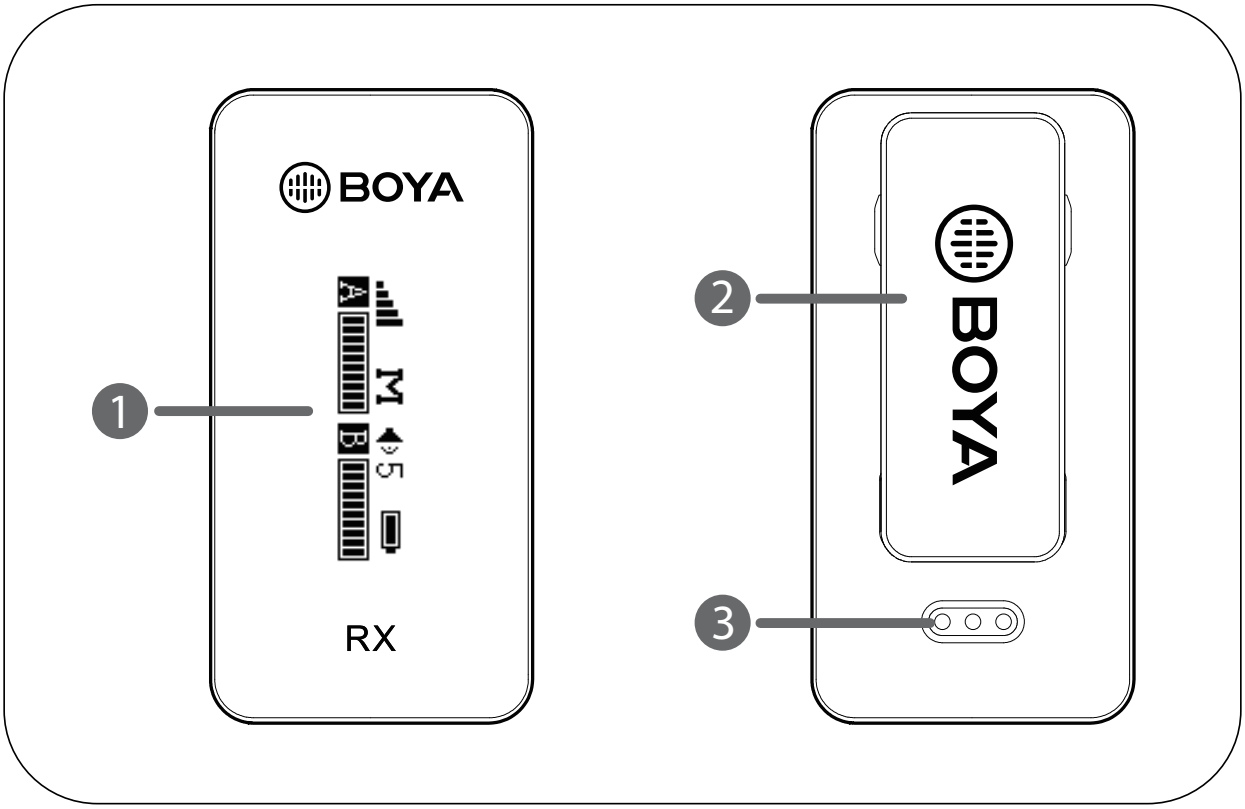

1. OLED display
- For more details, please refer to “OLED Display Operation Guide”.

2.Belt clip

3.Charging contacts

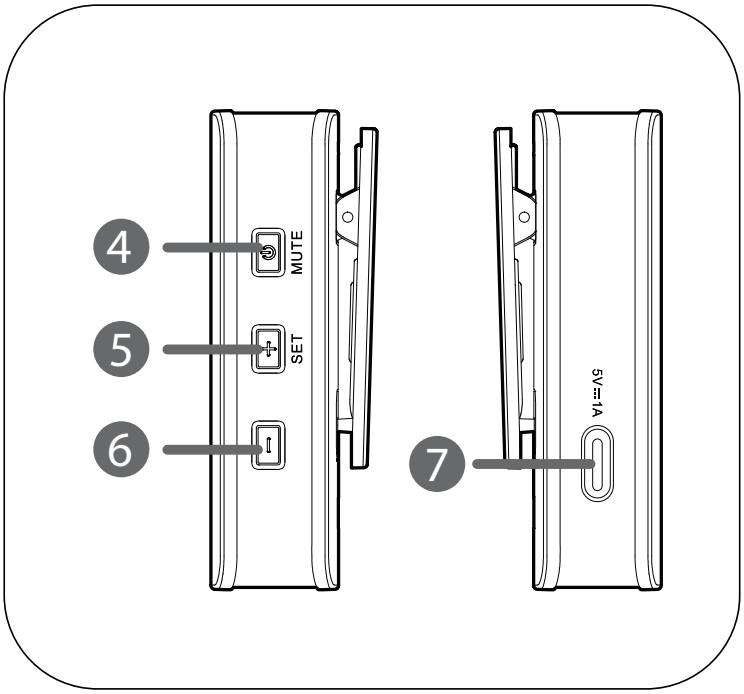

4. Power/Mute button

Function	Operation
Power ON	Long press
Power OFF	
Mute ON	Short press
Mute OFF	

5. +/SET button

Function	Operation
+	On home screen, short press to increase volume.
	On menu screen, short press to select different functions or values shown on the display.
SET	On home screen, long press to enter the menu screen.
	On menu screen, long press to enter the displayed menu. Then, long press again to confirm your option.

6. - button

- On home screen, short press to decrease volume.
- On menu screen, short press to select different functions or values shown on the display;
- long press to return to home screen.

7. USB-C charging port (DC 5V)

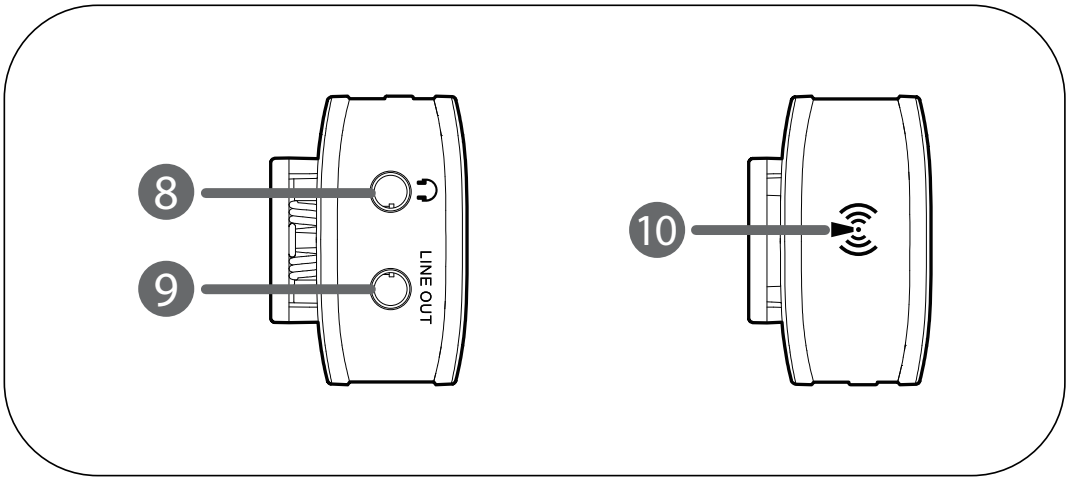

8. 3.5mm headphone output

- Connect headphones for audio monitoring.

9. LINE OUT jack

- Connect the BY-XM6 RX to a smartphone, tablet, camera, recorder or mixer with the supplied output cables.

10. Antenna

BY-XM6 RXD: Compact Receiver with Lightning Connector

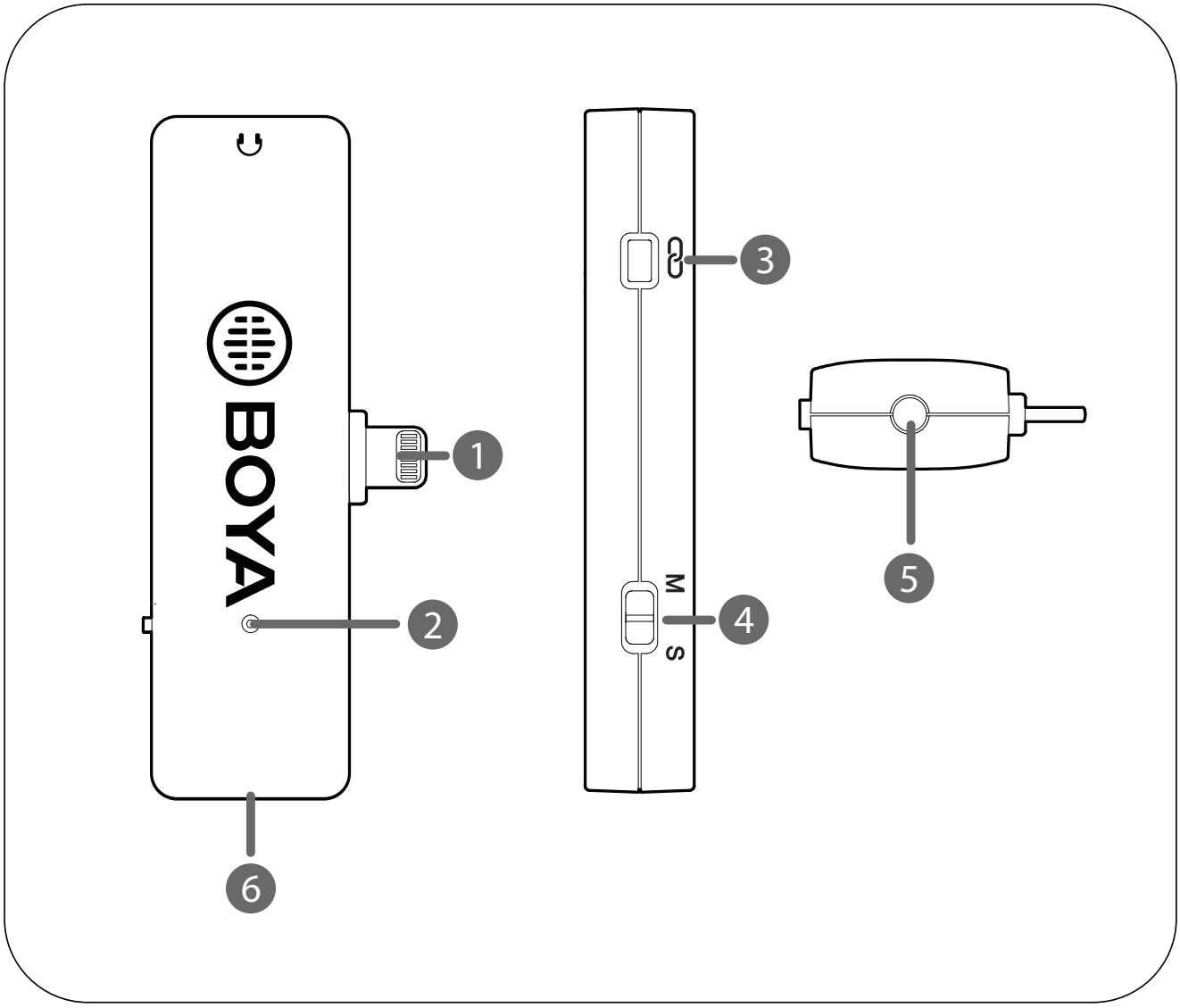

1. Lightning connector

- It can be connected to an iOS Lightning device.

2. Status indicator

Status	Indicator
Unpaired	Slowly flashing blue light
Pairing	Quickly flashing blue light
Paired Successfully	Solid blue light

3. Pair button

4. Mono/Stereo switch

- The output mode can be toggled between mono and stereo. When in mono mode, the audio from the left and right channel will be mixed. When in stereo mode, the audio from the left and right channel will be separated to the left and right of the stereo output.

5. 3.5mm headphone jack

- Connect headphones for audio monitoring.

6. Antenna

BY-XM6 RXU: Compact Receiver with USB-C Connector

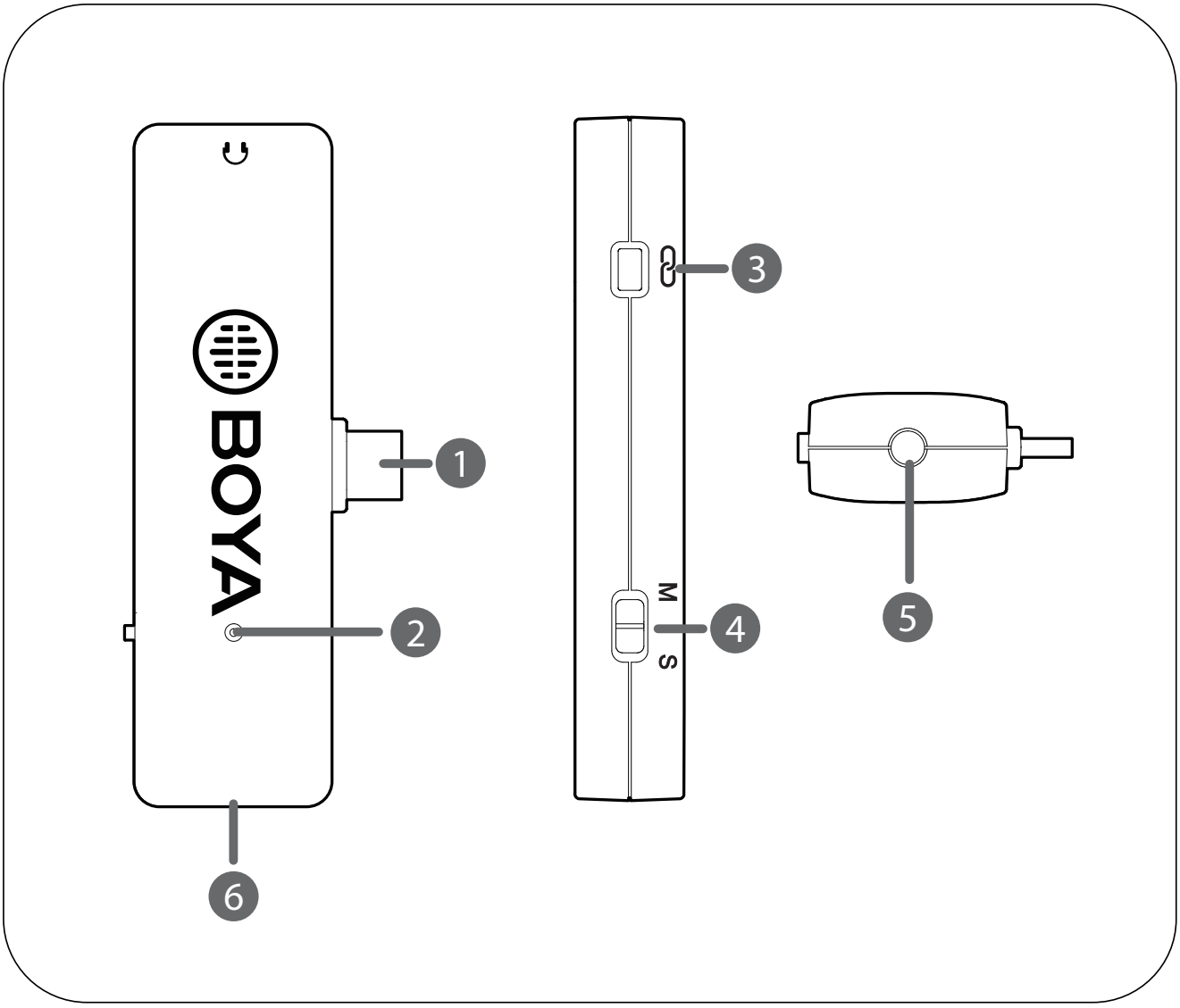

1. USB-C connector

- It can be connected to an Android smartphone, tablet or other USB-C devices.

2. Status indicator

Status	Indicator
Unpaired	Slowly flashing blue light
Pairing	Quickly flashing blue light
Paired Successfully	Solid blue light

3. Pair button

4. Mono/Stereo switch

- The output mode can be toggled between mono and stereo. When in mono mode, the audio from the left and right channel will be mixed. When in stereo mode, the audio from the left and right channel will be separated to the left and right of the stereo output.

5. 3.5mm headphone jack

- Connect headphones for audio monitoring.

6. Antenna

OLED Display Operation Guide

Wireless Transmitter BY-XM6 TX

Home screen

If no operation is performed within 20 seconds on other screens, the display will automatically return to home screen.

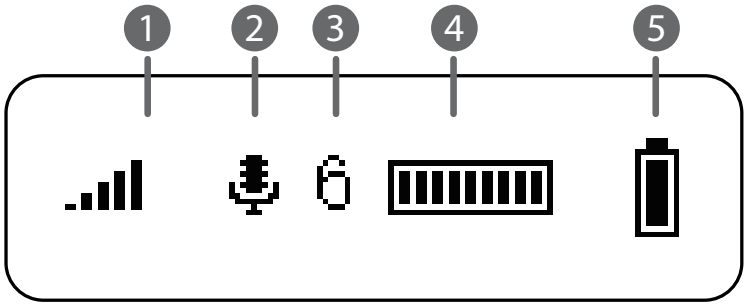

1. Pairing indicator

Paired successfully Disconnected Pairing

2. Input mode & Mute indicator

Mic in Line in

Mute ON

Mute ON (under Mic in mode) Mute ON (under Line in mode)

3. Mic gain

Displays the TX transmitter's mic gain level on home screen, press +/- button to adjust the microphone's input gain level.

4. Audio input level meter

Displays the audio input level.

5. **TX's battery level indicator**

Displays the TX battery level. Please recharge the device immediately when the indicator starts flashing.

Menu screen

⚠

On home screen, long press SET button to enter menu screen.
On menu screen, long press - button to return to home screen.

Connect Yes?

Connect Setting

Pair with the receiver. For details of operation, please refer to "Operation Guide".

Backlight On

Backlight Setting

Set backlight to always on or on for 10/30/60 seconds.
Default is "On".

Mute Enable

Mute Key Setting
Enable or disable mute key button function.
Default is “Enable”.

Mic Gain 6/6

Mic Gain Setting
Adjust the microphone’s input gain level (0~6).
Default is “5”.

Input Mic In

Input Mode Setting
The input mode can be selected to Mic In or Line In. When Mic In mode selected, the transmitter can be connected to the supplied lavalier microphone, or other microphones with a 3.5mm TRS output. When Line In mode selected, the transmitter can be connected to line-level output devices.
Default is "Mic In".

Language English

Language Setting
English or Chinese are available.
Default is English.

Restore Yes?

Restore Default Setting

Version V2.0

Version of the BY-XM6 TX

Wireless Receiver BY-XM6 RX

Home screen

⚠

If no operation is performed within 20 seconds on other screens, the display will automatically return to home screen.

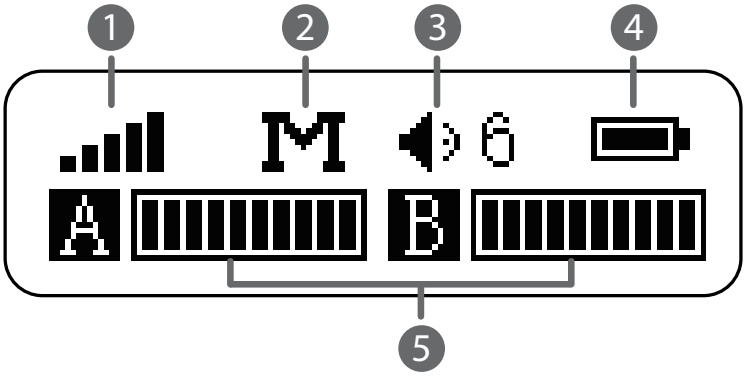

1. Pairing indicator

Paired successfully Disconnected Pairing

2. RX's output mode

M: Mono S: Stereo

3. Output volume & Mute indicator

on home screen, press +/- button to adjust the volume.

Mute ON Mute OFF

4. RX's battery level indicator

Displays the RX battery level. Please recharge the device immediately when the indicator starts flashing.

5. Audio input level meter

Displays the audio input level.

Menu screen

⚠

On home screen, long press SET button to enter menu screen.
On menu screen, long press - button to return to home screen.

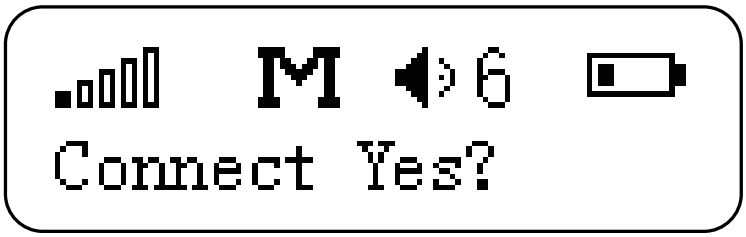

Connect Setting

Pair with the transmitter. For details of operation, please refer to "Operation Guide".

Backlight Setting

Set backlight to always on or on for 10/30/60 seconds.
Default is "On".

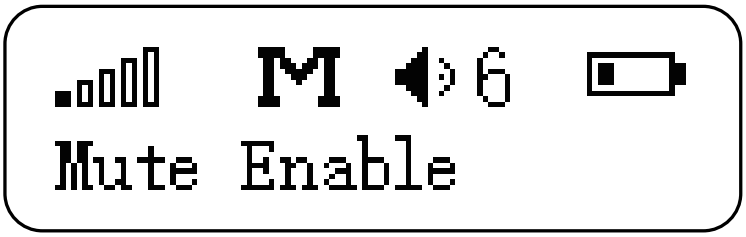

Mute Key Setting

Enable or disable mute key button function.
Default is “Enable”.

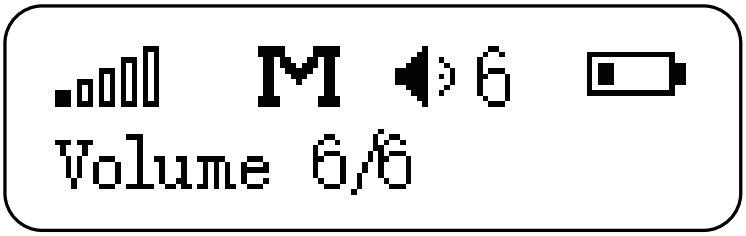

Output Volume Setting

Output volume can be set from 0 to 6.
Default is “5”.

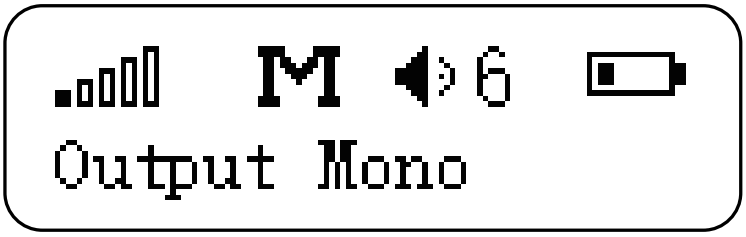

Output Mode Setting

The output mode can be set to either mono or stereo. When in mono mode, the audio from the transmitter, or transmitters will be mixed to both the left and right sides. When in stereo mode, the two transmitters' audio output will be separated to the left and right sides. Default is mono.

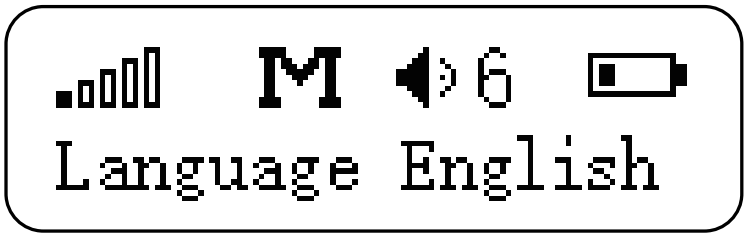

Language Setting
English or Chinese are available.
Default is English.

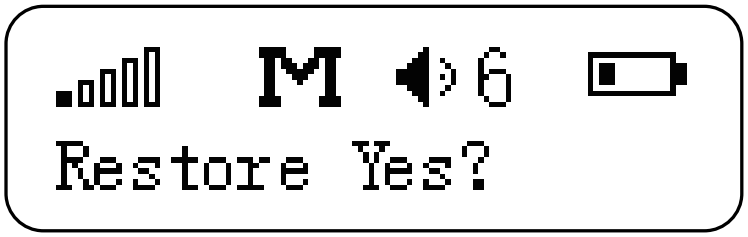

Restore Default Setting

Version of the BY-XM6 RX

Operation Guide

For the BY-XM6-S1/BY-XM6-S2 kit

1. Long press the power button to turn on the transmitter and the receiver.

2. Pairing

Before leaving factory, the system is pre-paired. Therefore, the connection will be established once they are powered on. If they are disconnected, please follow below steps:

① Long press the SET button to enter menu screen

② Use the + or -button to display the Connect setting menu on both transmitter and receiver.

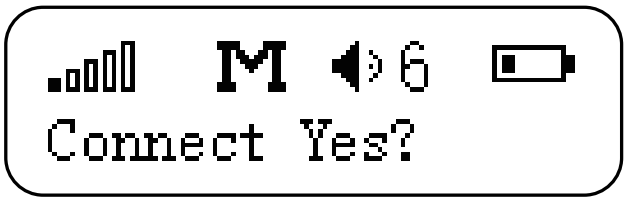

RX

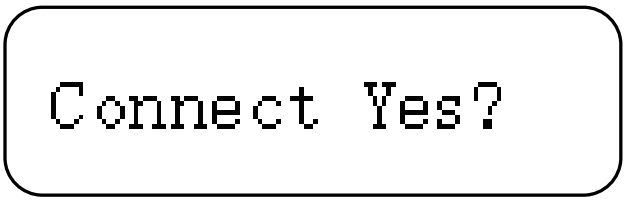

TX

③ Long press the SET button to select the menu.

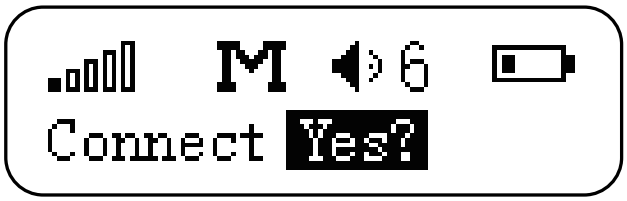

RX

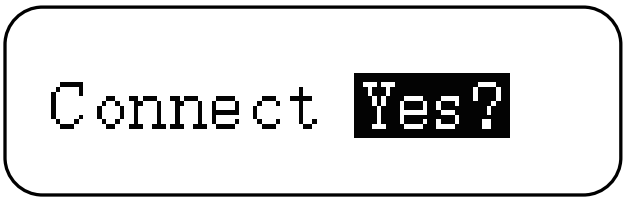

TX

④ Select Yes, and long press the SET button to confirm.

⑤ Transmitter and receiver will be successfully paired within 10s.

3. Connect the receiver to the mic input of a camera, recorder or mixer with the supplied 3.5mm TRS cable. Or connect the RX to a smartphone, tablet, or computer with the supplied 3.5mm TRS to TRRS cable.

4. You are ready to record.

For the BY-XM6-S3/BY-XM6-S4/BY-XM6-S5/BY-XM6-S6 kit

1. Long press the power button to turn on the transmitter.
2. Plug the RXD into an iOS device or the RXU into an USB-C device.
3. Pairing

Before leaving factory, the system is pre-paired. Therefore, the connection will be established once they are powered on. If they are disconnected, please follow below steps:

①Long press the TX's SET button to enter menu screen

②Use the + or -button to display the Connect setting menu

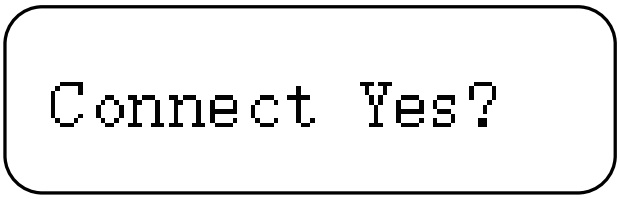

TX

③Long press the SET button to select the menu.

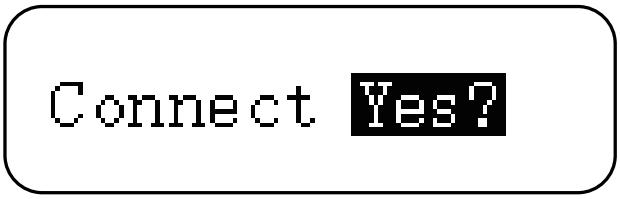

TX

④Select Yes, and long press the SET button to confirm. The transmitter enters pairing mode.

⑤Then, press and hold the Pair button of the RXD/RXU for 3 seconds to enable pairing mode. The indicator will flash blue rapidly.

⑥Transmitter and receiver will be successfully paired within 10s. The indicator of the receiver will turn solid blue, while the indicator on the transmitter will change to .

4. You are ready to record.

Specifications

BY-XM6 TX Transmitter

Transmission Type	2.4GHz Digital Frequency
Modulation	GFSK
Operating Range	Up to 328ft (100m) (without obstacle)
RF Output Power	＜10mW
Polar Pattern	Omnidirectional
Frequency Response	35Hz-18KHz
Maximum SPL	Built-in Microphone: 120dB SPL
	Lavalier Microphone: 110dB SPL
Sensitivity	Built-in Microphone: -39dB
	Lavalier Microphone: -39dB
SNR	> 84dB
Power Requirements	Built-in Li-ion Battery or USB-C DC 5V or Charging Contact
Built-in Battery Life	Approx. 7 hours
Antenna	PIFA Antenna
Audio Inputs	3.5mm TRS MIC/LINE IN Jack or Built-in Microphone
Weight	Approx. 32g(1.13oz)
Dimensions	62.1×31.6×16.5mm
Operating Temperature	–10°C to 50°C
Storage Temperature	–20°C to +55°C

BY-XM6 RX Receiver

Transmission Type	2.4GHz Digital Frequency
Modulation	GFSK
Operating Range	Up to 328ft (100m) (without obstacle)
Audio Output Connector	3.5mm Headphone Jack
	3.5mm TRS Output Jack
Audio Output Level	–60 dBV to -20dBV
Power Requirements	Built-in Li-ion Battery or USB-C DC 5V or Charging Contact
Built-in Battery Life	Approx. 7 hours
Antenna	PIFA Antenna
Weight	Approx. 32g(1.13oz)
Dimensions	62.1×31.6×16.5mm
Operating Temperature	–10°C to 50°C
Storage Temperature	–20°C to +55°C

BY-XM6 RXD Receiver

Transmission Type	2.4GHz ISM Frequency
Modulation	GFSK
Operating Range	Up to 328ft (100m) (without obstacle)
RF Output Power	＜10mW
Audio Output Connector	3.5mm Headphone Jack
	Lightning Connector
Power Requirements	Supplied by iOS Devices
Antenna	PIFA
Weight	14.5g (0.51oz)
Dimensions	75.6x23.15x12mm

BY-XM6 RXU Receiver

Transmission Type	2.4GHz ISM Frequency
Modulation	GFSK
Operating Range	Up to 328ft (100m) (without obstacle)
RF Output Power	＜10mW
Audio Output Connector	3.5mm Headphone Jack
	USB-C Connector
Power Requirements	Supplied by USB-C Devices
Antenna	PIFA
Weight	14.5g (0.51oz)
Dimensions	75.6x23.15x12mm

Features

- 2.4GHz wireless transmission technology
- Ideal for content creation, vlogging, mobile journalism, and more
- Delivers exceptional, broadcast-quality sound
- Ultracompact clip-on transmitter and dual-channel receiver
- Easy-to-use OLED display
- Real-time headphone monitoring
- Operating range of up to 100m
- High-quality built-in microphone
- Lavalier microphone included
- Selectable mono/stereo output

Packing List

BY-XM6-S1 (1×BY-XM6 TX + 1×BY-XM6 RX)

1× BY-XM6 TX Transmitter
1× BY-XM6 RX Receiver
2× USB-C Charging Cable
1× Lavalier Microphone
1× Mic Clip for Lavalier Microphone
1× Foam Windscreen for Lavalier Microphone
1× Fur Windshield for Built-in Microphone
1× 3.5mm TRS to TRS Output Cable for Cameras
1× 3.5mm TRS to TRRS Output Cable for Smartphones

BY-XM6-S2 (2×BY-XM6 TX + 1×BY-XM6 RX)

2× BY-XM6 TX Transmitter
1× BY-XM6 RX Receiver
3× USB-C Charging Cable
2× Lavalier Microphone
2× Mic Clip for Lavalier Microphone
2× Foam Windscreen for Lavalier Microphone
2× Fur Windshield for Built-in Microphone
1× 3.5mm TRS to TRS Output Cable for Cameras
1× 3.5mm TRS to TRRS Output Cable for Smartphones

BY-XM6-S3 (1×BY-XM6 TX + 1×BY-XM6 RXD)

1× BY-XM6 TX Transmitter

1× BY-XM6 RXD Receiver

1× USB-C Charging Cable

1× Lavalier Microphone

1× Mic Clip for Lavalier Microphone

1× Foam Windscreen for Lavalier Microphone

1× Fur Windshield for Built-in Microphone

BY-XM6-S4 (2×BY-XM6 TX + 1×BY-XM6 RXD)

2× BY-XM6 TX Transmitter

1× BY-XM6 RXD Receiver

2× USB-C Charging Cable

2× Lavalier Microphone

2× Mic Clip for Lavalier Microphone

2× Foam Windscreen for Lavalier Microphone

2× Fur Windshield for Built-in Microphone

BY-XM6-S5 (1×BY-XM6 TX + 1×BY-XM6 RXU)

1× BY-XM6 TX Transmitter

1× BY-XM6 RXU Receiver

1× USB-C Charging Cable

1× Lavalier Microphone

1× Mic Clip for Lavalier Microphone

1× Foam Windscreen for Lavalier Microphone

1× Fur Windshield for Built-in Microphone

BY-XM6-S6 (2×BY-XM6 TX + 1×BY-XM6 RXU)

2× BY-XM6 TX Transmitter

1× BY-XM6 RXU Receiver

2× USB-C Charging Cable

2× Lavalier Microphone

2× Mic Clip for Lavalier Microphone

2× Foam Windscreen for Lavalier Microphone

2× Fur Windshield for Built-in Microphone

概述

感谢您选择BOYA!

博雅BY-XM6 系统是迷你双通道无线麦克风系统，提供出色的广播级音质，适用于单反、无反相机、摄像机、手机、平板电脑等设备，是内容创作、Vlog拍摄、街头采访等场景的理想选择。

BY-XM6组合套装

型号	套装内容
BY-XM6-S1	1×BY-XM6 TX　1×BY-XM6 RX
BY-XM6-S2	2×BY-XM6 TX　1×BY-XM6 RX
BY-XM6-S3	1×BY-XM6 TX　1×BY-XM6 RXD
BY-XM6-S4	2×BY-XM6 TX　1×BY-XM6 RXD
BY-XM6-S5	1×BY-XM6 TX　1×BY-XM6 RXU
BY-XM6-S6	2×BY-XM6 TX　1×BY-XM6 RXU

产品结构

无线发射器BY-XM6 TX

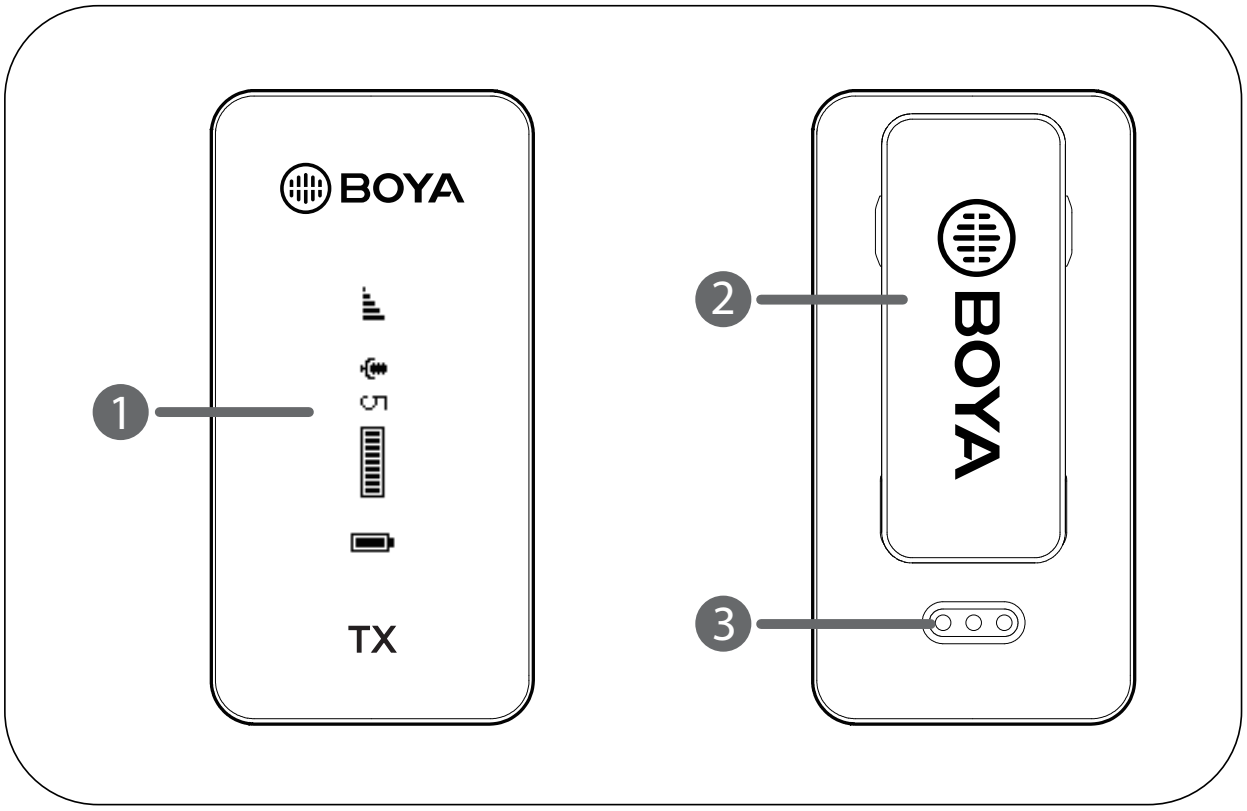

1. OLED显示屏

   – 详情参考“OLED屏幕操作指南”。

2. 背夹

3. 充电触点

4. 电源键/静音键

功能	操作
开机	长按
关机	
静音开启	短按
静音关闭	

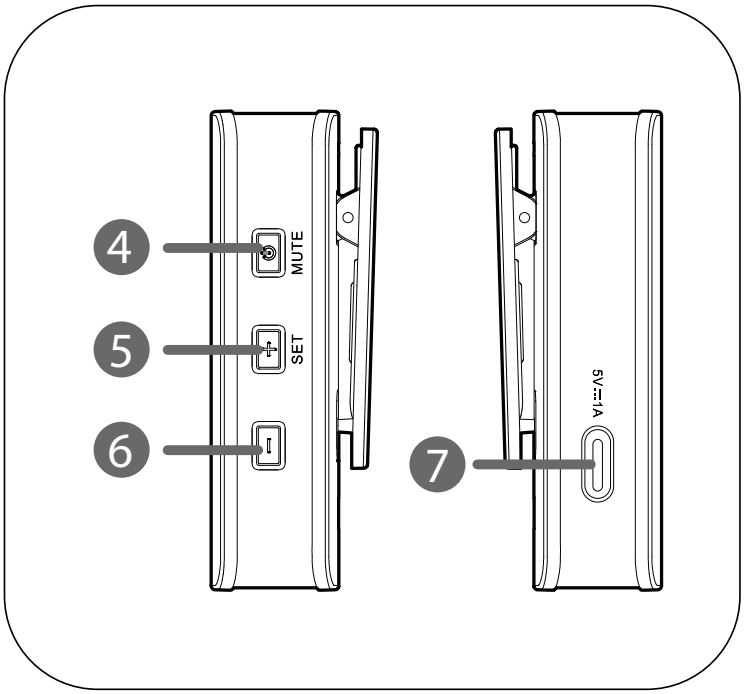

5. +/SET键

功能	操作
+	在主界面上，短按+键调节麦克风增益；
	在菜单界面上，短按+键调整各参数值或功能。
SET	在主界面上，长按设置键进入菜单界面；
	在菜单界面，长按设置键进入选定界面，再次长按保存设定。

6. – 键

– 在主界面上，短按–键调节麦克风增益；

– 在菜单界面上，短按–键调整各参数值或功能；

– 长按–键回到主界面。

7. USB–C充电口（直流电5V）

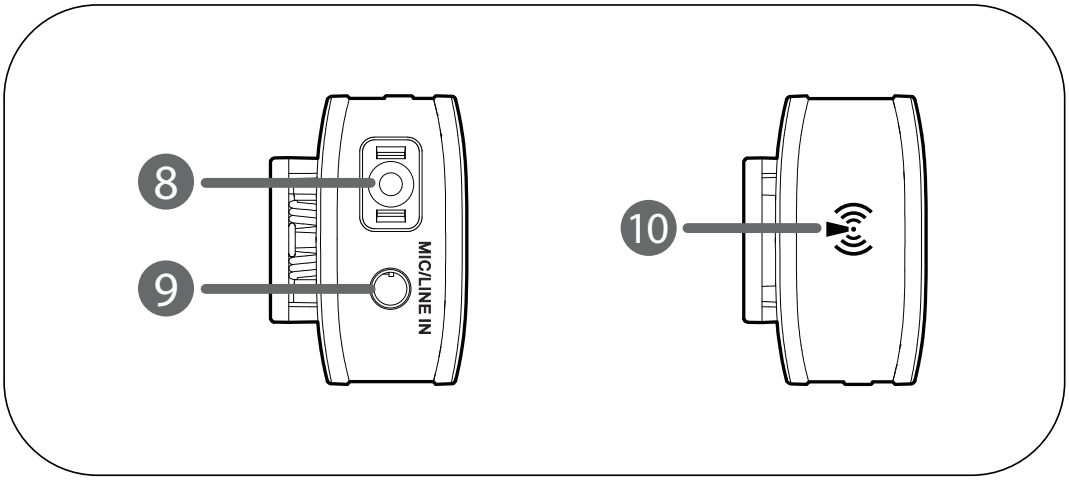

8. 内置麦克风

9. 麦克风/线性输入孔

– 可接入随附的3.5 mm领夹麦或其他 3.5 mm TRS 麦克风或线路输入设备。

10. 天线

无线接收器BY-XM6 RX

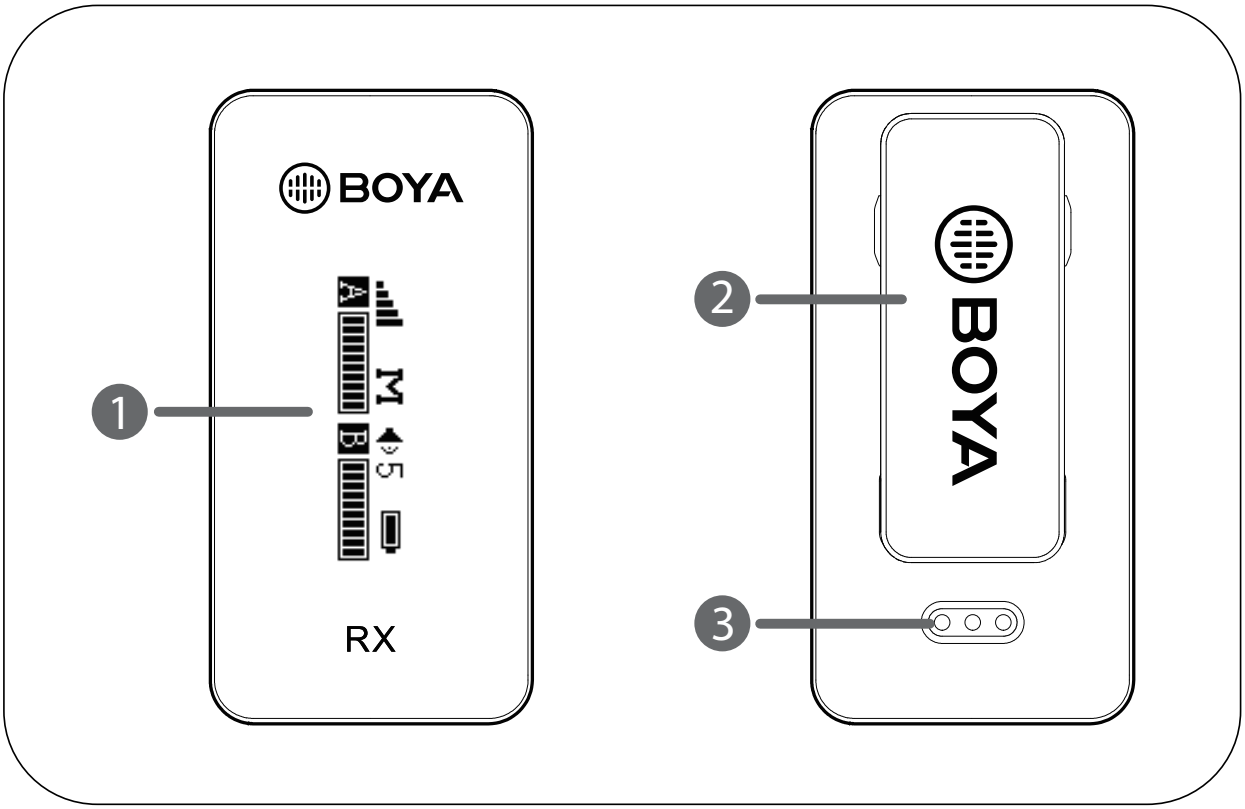

1. OLED显示屏

   – 详情参考“OLED屏幕操作指南”。

2. 背夹

3. 充电触点

4. 电源键/静音键

功能	操作
开机	长按
关机	
静音开启	短按
静音关闭	

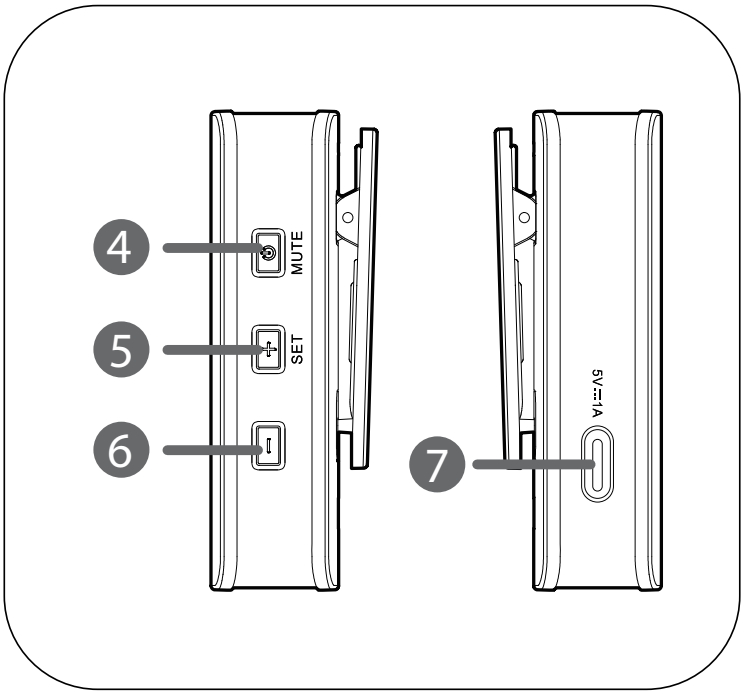

5. +/SET键

功能	操作
+	在主界面上，短按+键调节麦克风增益；
	在菜单界面上，短按+键调整各参数值或功能。
SET	在主界面上，长按设置键进入菜单界面；
	在菜单界面，长按设置键进入选定界面，再次长按保存设定。

6. – 键

– 在主界面上，短按–键减小音量；

– 在菜单界面上，短按–键调整各参数值或功能；

– 长按–键回到主界面。

7. USB–C充电口（直流电5V）

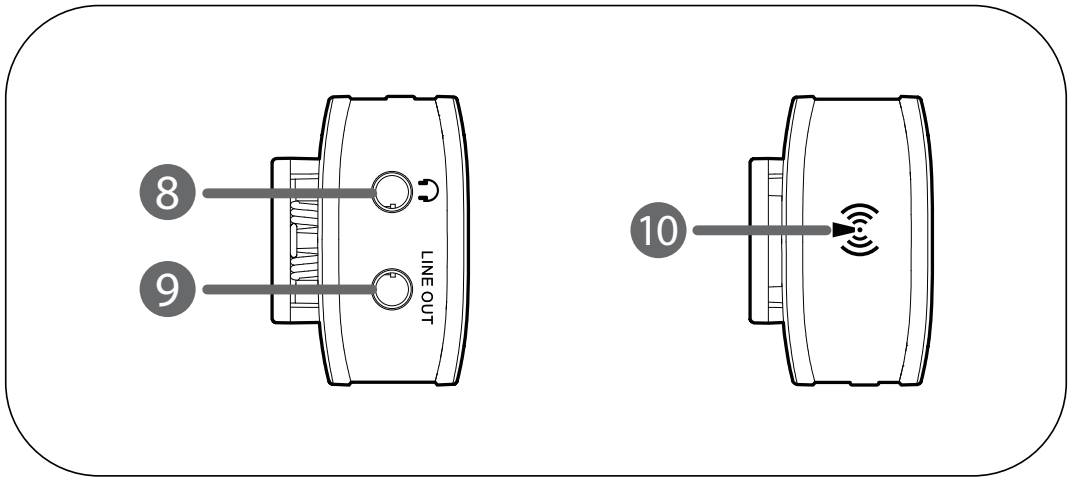

8. 3.5mm耳机插孔

– 接入耳机进行音频监听。

9. LINE OUT线性输出孔

– 使用随附输出线，将 BY–XM6 RX 连接至手机、平板电脑、相机、录音笔或混音器等设备。

10. 天线

BY-XM6 RXD：迷你接收器（带Lightning接口）

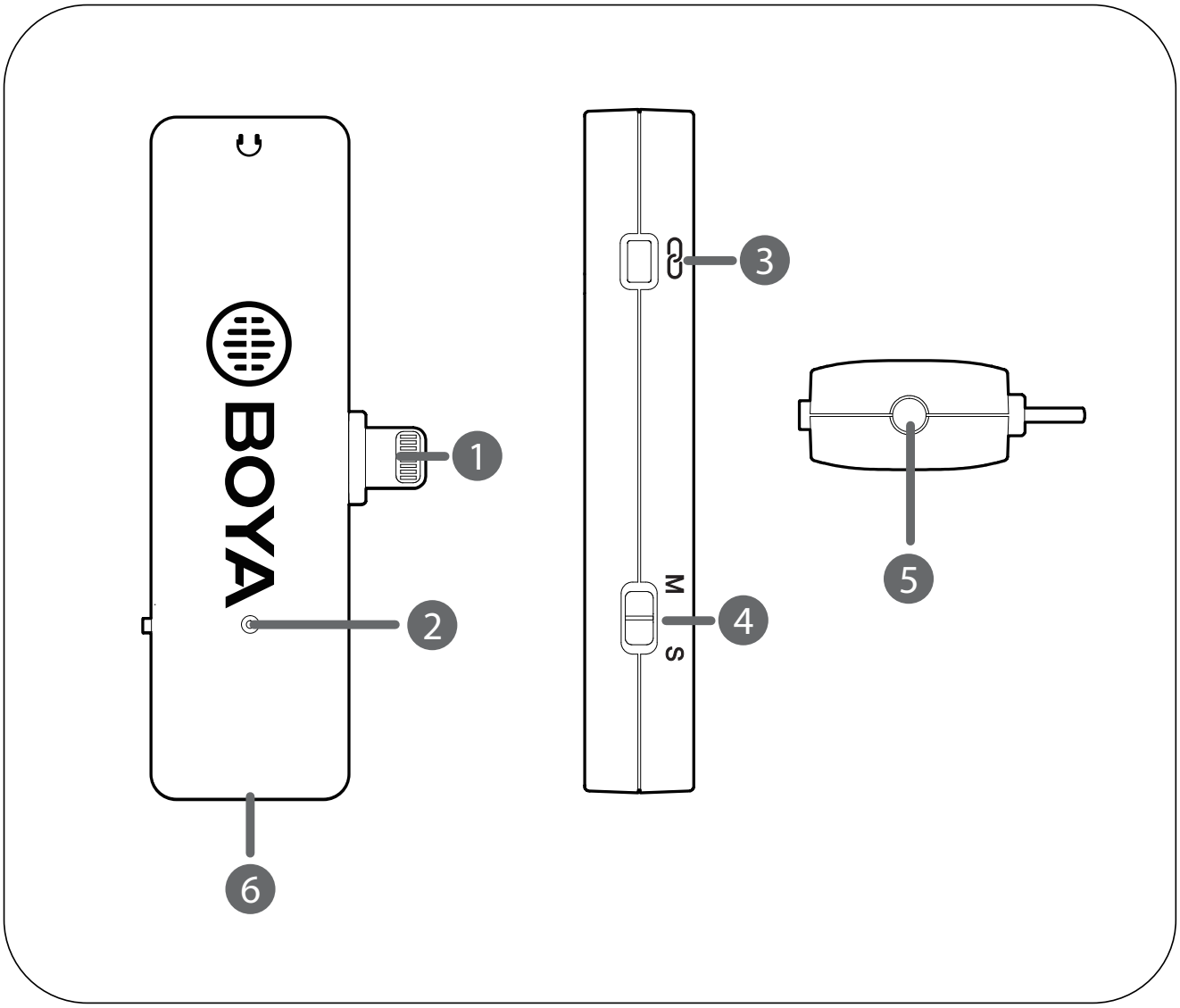

1. Lightning接口

– 可接入iOS设备。

2. 状态指示灯

状态	指示灯
未联机	蓝灯慢闪
对码中	蓝灯快闪
联机成功	蓝灯常亮

3. 对码键

4. 单声道/立体声切换键

– 输出模式可以设置为单声道或立体声模式。 在单声道模式下，左右声道的音频将混合输出。 在立体声模式下，左右声道的音频将分开输出。

5. 3.5mm耳机插孔

– 接入耳机进行音频监听

6. 天线

BY-XM6 RXU：迷你接收器（带USB-C接口）

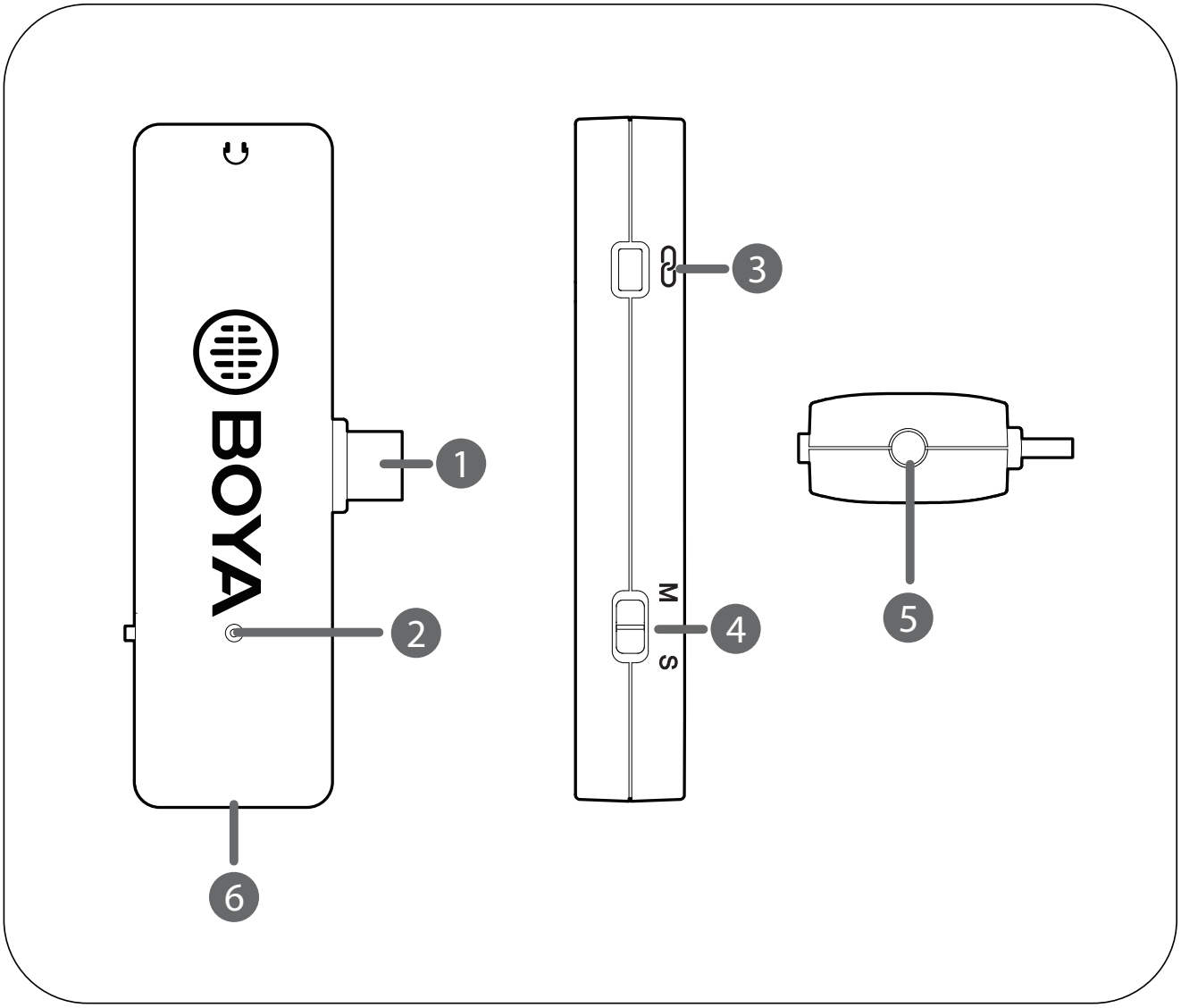

1. USB-C接口

– 可接入安卓手机、平板或其他USB-C设备。

2. 状态指示灯

状态	指示灯
未联机	蓝灯慢闪
对码中	蓝灯快闪
联机成功	蓝灯常亮

3. 对码键

4. 单声道/立体声切换键

– 输出模式可以设置为单声道或立体声模式。 在单声道模式下，左右声道的音频将混合输出。 在立体声模式下，左右声道的音频将分开输出。

5. 3.5mm耳机插孔

– 接入耳机进行音频监听

6. 天线

OLED屏幕操作指南

无线发射器BY-XM6 TX
主界面

⚠

若超过20秒不操作，显示屏会自动跳转回主界面上。

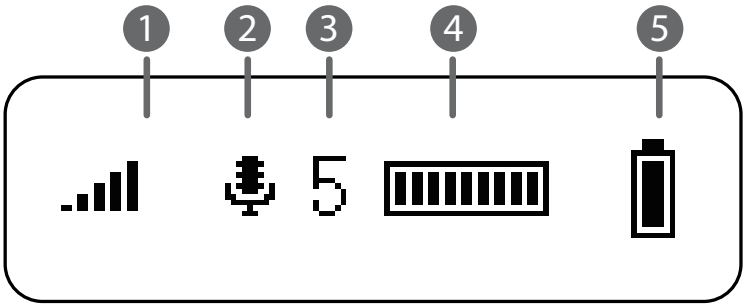

1. 配对状态标识

联机成功　未联机　对码中

2. 输入模式、静音状态指示

麦克风输入　线路输入

静音模式

静音开启（麦克风输入模式下）静音开启（线路输入模式下）

3. 麦克风增益显示

在主界面上，短按+/–键可调节麦克风增益。

4. 实时输入电平指示

显示实时输入电平大小。

5. 发射器电量指示

显示发射器电量情况，若图标为空格且开始闪烁，请及时进行充电。

菜单界面

⚠

在主界面上，长按+/SET键，可进入菜单页面；
在菜单界面，长按–键，可返回到主界面。

连接请求	是?

连接设置

与接收器配对, 具体操作请参考“操作指南”。

背光时间	常亮

背光时间设置

背光灯时间可设置为常亮、10秒、30秒、或60秒，默认设置为“常亮”。

静音按键　　开启

静音按键功能设置

开启或关闭静音按键功能，默认设置为“开启”。

麦克风增益　　5/6

麦克风增益设置

麦克风增益调节范围（0~6），默认设置为“5”。

输入　　麦克风

输入模式设置

麦克风输入模式：可接入3.5mm领夹麦克风或其他3.5mm TRS麦克风。（系统默认设置）

线路输入模式：可接入线路输入设备。

语言设置　　中文

语言设置

English/中文可供选择，默认设置为“English”。

恢复默认　　是?

恢复默认设置

版本号　　V2.0

BY-XM6 TX版本号

无线接收器BY-XM6 RX

主界面

⚠

若超过20秒不操作，显示屏会自动跳转回主界面上。

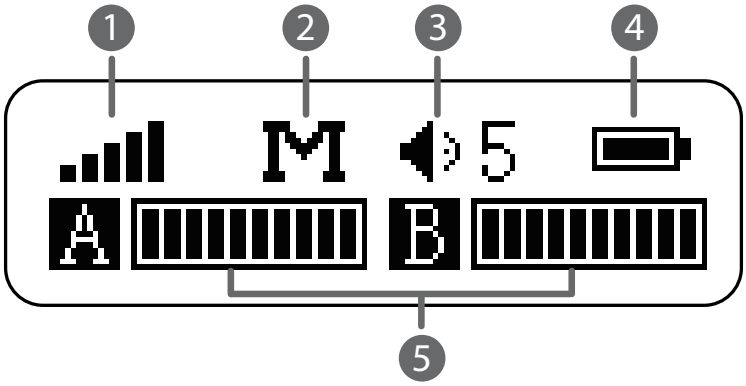

1. 配对状态标识

联机成功　未联机　对码中

2. 接收器输出模式

M：单声道　S：立体声

3. 输出音量、静音状态指示

在主界面上，短按+/–键可调节音量大小。

静音开启　静音关闭

4. 接收器电量指示

显示接收器电量情况，若图标为空格且开始闪烁，请及时进行充电。

5. 实时输入电平指示

显示实时输入电平大小。

菜单界面

⚠

在主界面上，长按+/SET键，可进入菜单页面；
在菜单界面，长按–键，可返回到主界面。

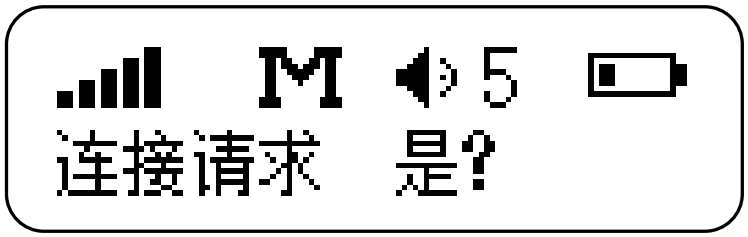

连接设置

与发射器配对, 具体操作请参考“操作指南”。

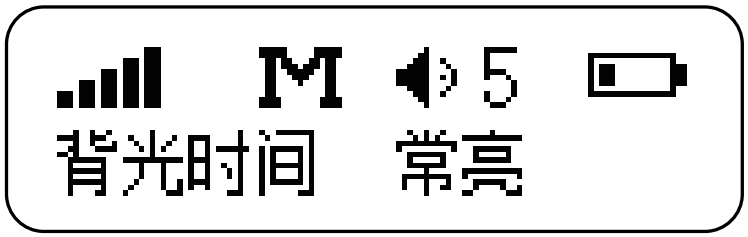

背光时间设置

背光灯时间可设置为常亮、10秒、30秒、或60秒，默认设置为“常亮”。

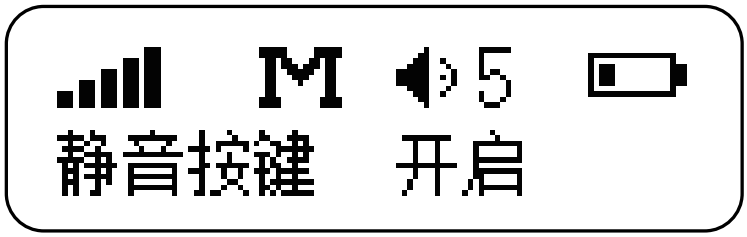

静音按键功能设置

开启或关闭静音按键功能，默认设置为“开启”。

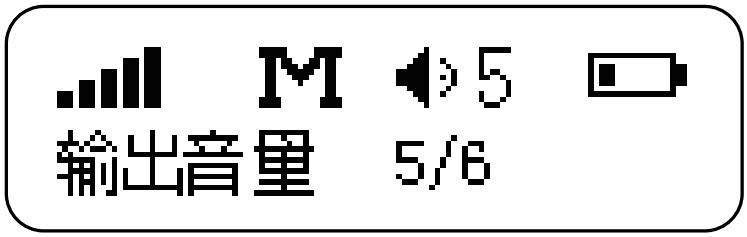

输出音量设置

输出音量调节范围（0~6），默认设置为“5”。

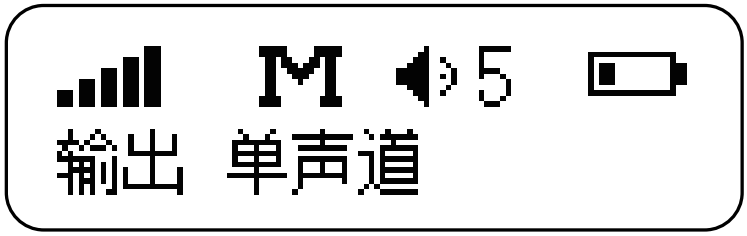

输出模式设置

输出模式可以设置为单声道或立体声。当在单声道模式，音频将混合到左右两边。在立体声模式下，两个发射器的音频输出将左右分开。默认设置为“单声道”。

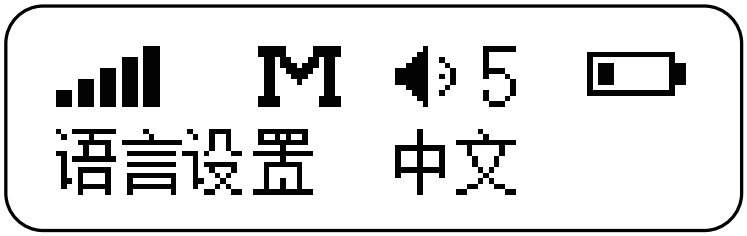

语言设置

English/中文可供选择，默认设置为“English”。

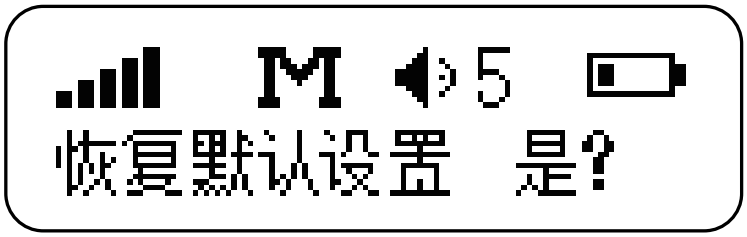

恢复默认设置

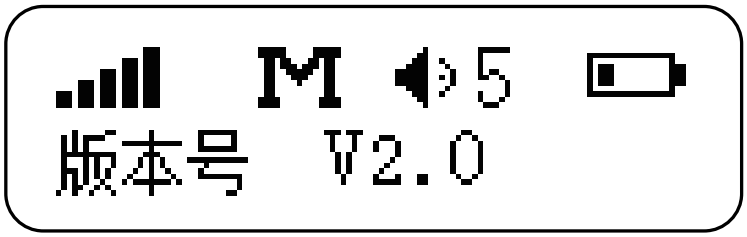

BY-XM6 RX版本号

操作指南

BY-XM6-S1/BY-XM6-S2套装：

1. 长按电源键，将发射器、接收器开机。

2. 配对

发射器和接收器出厂前已配对成功。因此，产品开机之后会自动联机。

若无成功连接，请进行如下配对操作：

① 长按SET键进入菜单界面

② 使用+或–按钮在发射器和接收器上选择“连接请求”菜单

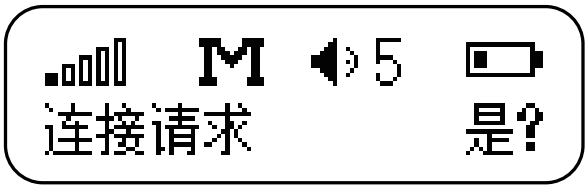

接收器

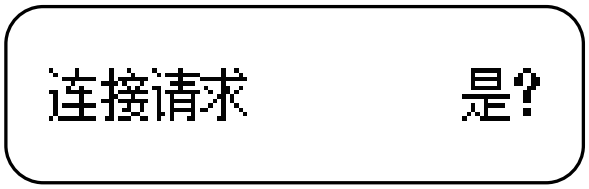

发射器

③ 长按SET键进入菜单

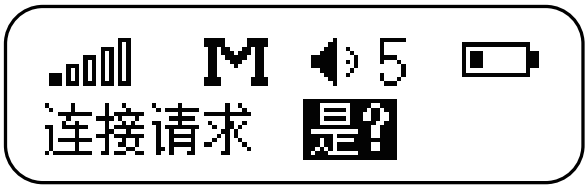

接收器

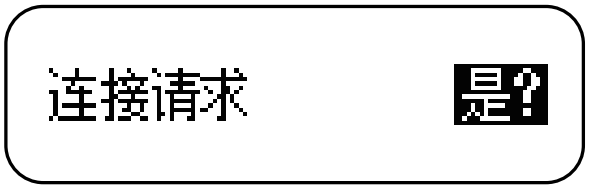

发射器

④ 选择是，长按SET键确认

⑤ 发射器和接收器将在 10 秒内完成配对

3. 使用随附的 3.5mm TRS转 TRS转接线将接收器连接至相机、录音笔或混音器等设备。 或者使用随附的3.5mm TRS 转 TRRS转接线将 接收器连接至手机、平板电脑等移动设备。

4. 开始录制。

BY-XM6-S3/BY-XM6-S4/BY-XM6-S5/BY-XM6-S6套装：

1. 长按电源键3秒，启动发射器。
2. 将RXD插入iOS设备或将RXU插入USB-C设备。
3. 发射器和接收器配对。

发射器和接收器出厂前已配对成功。因此，产品开机之后会自动联机。若无成功连接，请进行如下配对操作：

①长按发射器SET键进入菜单界面

②使用+或-按钮在发射器上选择“连接请求”菜单

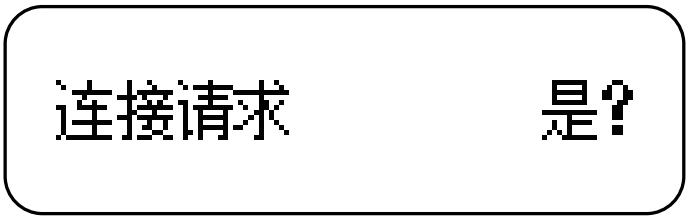

发射器

③长按SET键进入菜单

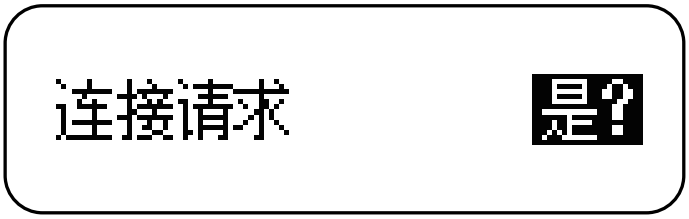

发射器

④选择是，长按SET键确认，发射器进入对码状态

⑤长按RXD/RXU对码键3秒，使接收器进入对码状态，指示灯呈蓝灯快闪。

⑥发射器和接收器将在10秒内完成配对。配对成功后，接收器指示灯呈蓝灯常亮，发射器 图标变为状态 。

4. 开始录制。

参数

BY-XM6 TX 发射器

传输方式	2.4GHz数字频段
信号调制	高斯频移键控
操作距离（无障碍）	最远至100米
射频输出功率	＜10mW
极性模式	全向型
频率响应	35Hz-18KHz
最大声压级	内置麦克风：120dB SPL
	领夹麦克风：110dB SPL
灵敏度	内置麦克风：-39dB
	领夹麦克风：-39dB
信噪比	> 84dB
供电方式	内置锂电池 / USB-C直流电5V /充电盒触点充电
内置电池续航时间	约7小时
天线	PIFA天线
音频输入源	3.5mm TRS麦克风/线性输入，或内置麦克风
重量	约32g
尺寸	62.1×31.6×16.5mm
工作温度	−10°C ~ 50°C
贮存温度	−20°C ~ +55°C

BY-XM6 RX 接收器

传输方式	2.4GHz数字频段
信号调制	高斯频移键控
操作距离（无障碍）	最远至100米
音频输出口	3.5mm耳机插孔 / 3.5mm TRS输出孔
音频输出电平	−60 dBV至−20dBV
供电方式	内置锂电池 / USB-C直流电5V /充电盒触点充电
内置电池续航时间	约7小时
天线	PIFA天线
重量	约32g
尺寸	62.1×31.6×16.5mm
工作温度	−10°C ~ 50°C
贮存温度	−20°C ~ +55°C

BY-XM6 RXD接收器

传输方式	2.4GHz ISM频段
信号调制	GFSK
操作距离（无障碍）	最远至100米
RF输出功率	＜10mW
音频输出口	3.5mm耳机插孔
	Lightning接口
供电方式	iOS设备供电
天线类型	PIFA
重量	14.5g
尺寸	75.6x23.15x12mm

BY-XM6 RXU接收器

传输方式	2.4GHz ISM频段
信号调制	GFSK
操作距离（无障碍）	最远至100米
RF输出功率	＜10mW
音频输出口	3.5mm耳机插孔
	USB-C接口
供电方式	USB-C设备供电
天线类型	PIFA
重量	14.5g
尺寸	75.6x23.15x12mm

特点

- 2.4GHz无线传输技术
- 视频内容创作、移动新闻等的理想选择
- 提供卓越的广播级音质
- 超紧凑型夹式发射器和双通道接收器
- 具有易于操作的OLED 显示屏
- 实时耳机监听功能
- 工作范围可达 100m
- 高品质内置麦克风
- 配备领夹麦克风
- 可自由切换单声道/立体声输出模式

包装清单

BY-XM6-S1（1×BY-XM6 TX + 1×BY-XM6 RX）

1× BY-XM6 TX发射器
1× BY-XM6 RX接收器
2× USB-C充电线
1× 领夹麦
1× 麦克风夹子
1× 领夹麦防风海绵
1× 内置麦克风防风毛套
1× 3.5mm TRS转TRS相机输出线
1× 3.5mm TRS转TRRS手机输出线

BY-XM6-S2（2×BY-XM6 TX + 1×BY-XM6 RX）

2× BY-XM6 TX发射器
1× BY-XM6 RX接收器
3× USB-C充电线
2× 领夹麦
2× 麦克风夹子
2× 领夹麦防风海绵
2× 内置麦克风防风毛套
1× 3.5mm TRS转TRS相机输出线
1× 3.5mm TRS转TRRS手机输出线

BY-XM6-S3 (1×BY-XM6 TX + 1×BY-XM6 RXD)

1× BY-XM6 TX发射器

1× BY-XM6 RXD接收器

1× USB-C充电线

1× 领夹麦

1× 麦克风夹子

1× 领夹麦防风海绵

1× 内置麦克风防风毛套

BY-XM6-S4 (2×BY-XM6 TX + 1×BY-XM6 RXD)

2× BY-XM6 TX发射器

1× BY-XM6 RXD接收器

2× USB-C充电线

2× 领夹麦

2× 麦克风夹子

2× 领夹麦防风海绵

2× 内置麦克风防风毛套

BY-XM6-S5 (1×BY-XM6 TX + 1×BY-XM6 RXU)

1× BY-XM6 TX发射器

1× BY-XM6 RXU接收器

1× USB-C充电线

1× 领夹麦

1× 麦克风夹子

1× 领夹麦防风海绵

1× 内置麦克风防风毛套

BY-XM6-S6 (2×BY-XM6 TX + 1×BY-XM6 RXU)

2× BY-XM6 TX发射器

1× BY-XM6 RXU接收器

2× USB-C充电线

2× 领夹麦

2× 麦克风夹子

2× 领夹麦防风海绵

2× 内置麦克风防风毛套

FCC Warning

This device complies with part 15 of the FCC Rules. Operation is subject to the following two conditions:(1) This device may not cause harmful interference, and (2) this device must accept any interference received, including interference that may cause undesired operation.

Any Changes or modifications not expressly approved by the party responsible for compliance could void the user's authority to operate the equipment.

This equipment has been tested and found to comply with the limits for a Class B digital device, pursuant to part 15 of the FCC Rules. These limits are designed to provide reasonable protection against harmful interference in a residential installation. This equipment generates uses and can radiate radio frequency energy and, if not installed and used in accordance with the instructions, may cause harmful interference to radio communications. However, there is no guarantee that interference will not occur in a particular installation. If this equipment does cause harmful interference to radio or television reception, which can be determined by turning the equipment off and on, the user is encouraged to try to correct the interference by one or more of the following measures:

- Reorient or relocate the receiving antenna.
- Increase the separation between the equipment and receiver.
- Connect the equipment into an outlet on a circuit different from that to which the receiver is connected.
- Consult the dealer or an experienced radio/TV technician for help.

The device has been evaluated to meet general RF exposure requirement. The device can be used in portable exposure condition without restriction.

IC Caution:
Radio Standards Specification RSS-Gen, issue 5
- English:
This device contains licence-exempt transmitter(s)/receiver(s) that comply with Innovation, Science and Economic Development Canada's licence-exempt RSS(s). Operation is subject to the following two conditions:
This device may not cause interference.
This device must accept any interference, including interference that may cause undesired operation of the device.

RF exposure statement:

The device has been evaluated to meet general RF exposure requirement. The device can be used in portable exposure condition without restriction.

- French:
Cet appareil contient des émetteurs / récepteurs exemptés de licence conformes aux RSS (RSS) d'Innovation, Sciences et Développement économique Canada. Le fonctionnement est soumis aux deux conditions suivantes:
Cet appareil ne doit pas causer d'interférences.
Cet appareil doit accepter toutes les interférences, y compris celles susceptibles de provoquer un fonctionnement indésirable de l'appareil.

Déclaration d'exposition RF:

L'appareil a été évalué pour répondre aux exigences générales d'exposition aux RF. L'appareil peut être utilisé dans des conditions d'exposition portable sans restriction.

www.boya-mic.com

V01

SHENZHEN JIAYZ PHOTO INDUSTRIAL., LTD.

The BOYA logo is a trademark which is registered and owned by Shenzhen Jiayz Photo Industrial., Ltd.

深圳市长丰影像器材有限公司

地址:广东省深圳市龙华区观澜街道大富社区硅谷动力智能终端产业园A16栋

TEL: 400 6131096
Email: sales@boya-mic.com
www.boya-mic.com / www.jiayz.com