SEVENOAK

SKM-W1

Ultracompact 2.4GHz Wireless Microphone System

2.4GHz迷你无线麦克风套装

© 2021 Sevenoak inc.Visit us on the web at www.sevenoak.biz

Statement

Thank you for purchasing Sevenoak!

Please read this manual carefully before using and strictly operate and store in accordance with the instructions. Please save the manual for future reference.
If the user manual can not help you to solve problems, please ask your retailer for further assistance or email us: **www.sevenoak.biz**.

Cautions

1. Please do not dismantle the outer case.
2. Don't place this unit close to heat sources such as heater, oven, or other devices that produce heat.
3. Please do not replace the battery on your own.
4. Only use a soft, dry cloth to clean the product.
5. When using and storing, please pay attention to dust and moisture.

Introduction

The Sevenoak SKM-W1 is an ultracompact and portable 2.4GHz wireless lavalier microphone system. Used with different detachable adapters, it is compatible with multiple devices such as smartphones, tablets and cameras. The SKM-W1 is ideal for live video streaming, Vlog creation, and other audio capturing applications.

Features

2.4GHz wireless transmission technology
Ideal for live video streaming, Vlog creation, etc
Built-in professional microphone
Detachable adapter for multi-device compatibility
Mute function & gain control
Compact and easy to carry

Packing List

SKM-W1 RX
×1

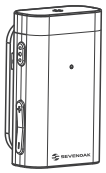

SKM-W1 TX
×1

Fur Windshield
×1

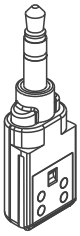

3.5mm
TRS Adapter
×1

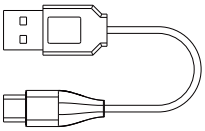

11.8" (30cm) Type-C
to USB-A Charging Cable
×2

Carrying Case
×1

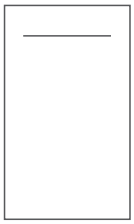

Warranty Card
×1

User Manual
×1

Product Structure

1. SKM-W1 TX

The SKM-W1 TX is an ultracompact and easy-to-use wireless lavalier transmitter. It features the functions of mute and gain control. With a high-quality built-in microphone, it can realize the best possible wireless transmission.

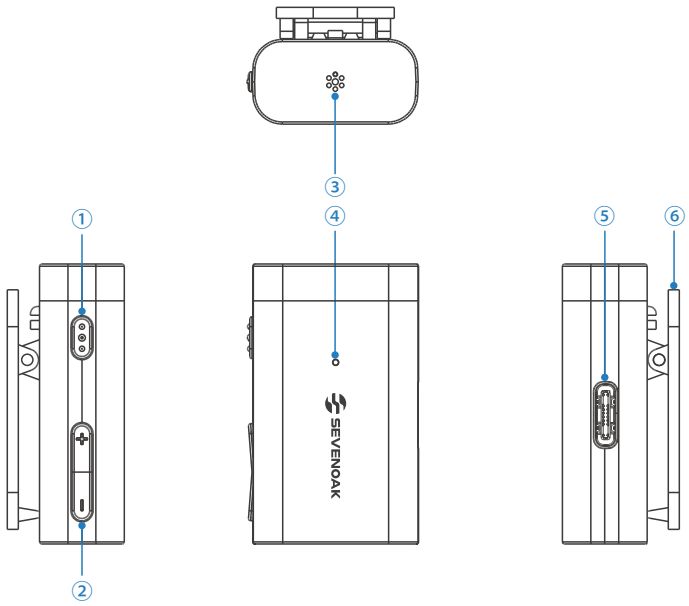

① Power/Mute Button

Function	Operation
Power ON/OFF	Press and hold the button for 3 seconds
Mute ON/OFF	Press the button

② +/-Button

Adjusts gain for microphone level input.
The setting is retained even after the power is turned off.

③ Built-in Microphone
④ Indicator

Mode	Indicator Status
Unpaired	Slowly flashing blue light
Pairing	Quickly flashing blue light
Paired Successfully	Solid blue light
Mute ON	Slowly flashing red light
Low Battery	Quickly flashing red light
Charging	Solid red light
Fully Charged	Light off

⑤ Type-C Charging Port
⑥ Belt Clip

2. SKM-W1 RX

SKM-W1 RX is an ultracompact wireless receiver. Used with different detachable adapters, it is compatible with multiple devices such as smartphone and camera.

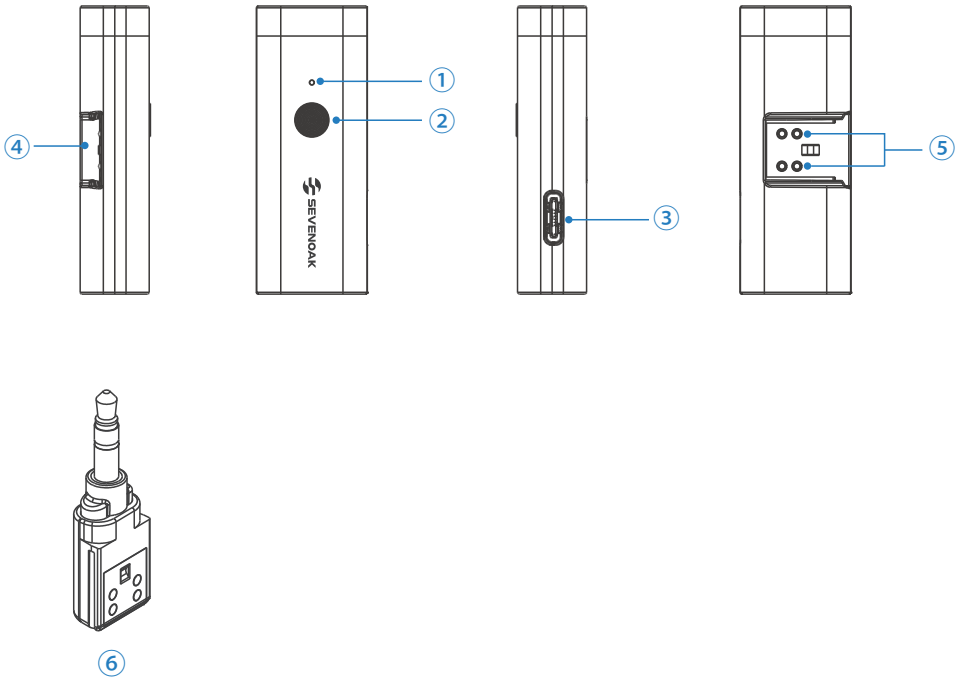

① Indicator

Mode	Indicator Status
Unpaired	Slowly flashing blue light
Pairing	Quickly flashing blue light
Paired Successfully	Solid blue light
Low Battery	Quickly flashing red light
Charging	Solid red light
Fully Charged	Light off

② Power Button

Press and hold the button for 3 seconds to turn on/off the SKM-W1 RX.

③ Type-C Charging Port

④ Adapter Slot

⑤ Contacts

⑥ 3.5mm TRS Adapter

For DSLR, camcorder, recorder and other devices with a 3.5mm TRS jack.

Optional Accessories

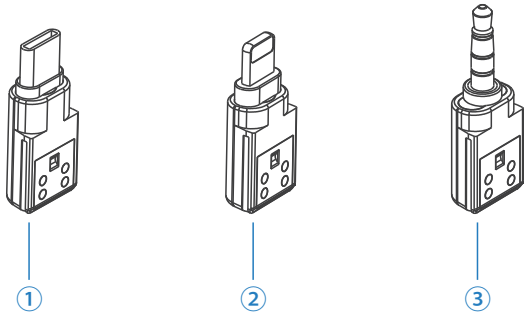

① TYPE-C Adapter

For most Android phones and other Type-C devices.

② MFi Certificated Lightning Adapter

For iPhone, iPad, iPod.

③ 3.5mm TRRS Adapter

For smartphone, laptop, tablet and other devices with a 3.5mm TRRS jack.

Note: Lightning adapter, 3.5mm TRRS adapter and Type-C adapter are not included, please purchase separately if needed.

Accessories Installation

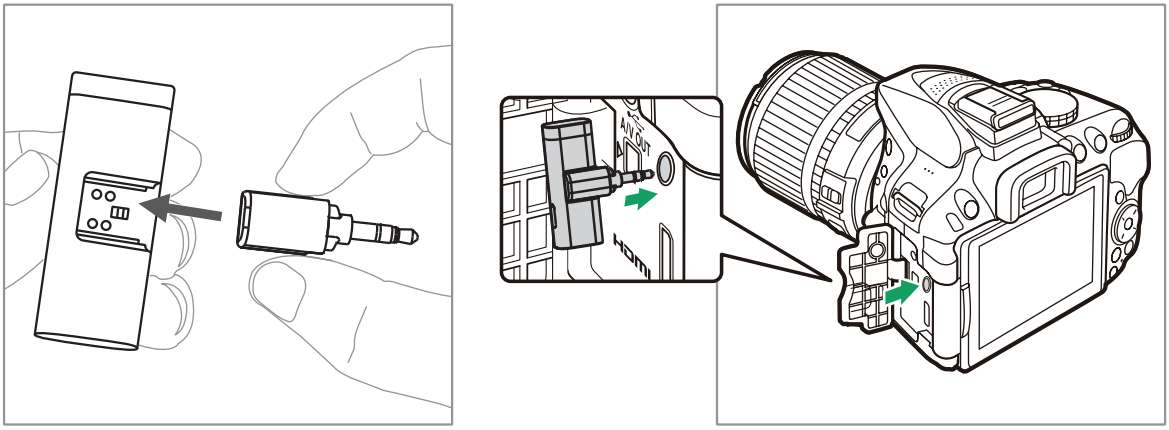

Operation Guide

1. Press and hold the Power button for 3 seconds to turn on the transmitter TX.
2. Insert the right adapter into the receiver RX according to your needs (Please refer to "Accessories Installation" for detailed operation). Press and hold the Power button for 3 seconds to turn on the receiver RX.
3. Transmitter and Receiver pairing
   Before leaving factory, the system has been paired successfully. If they are disconnected or unpaired, please see below for pairing instructions:
   ① With the system powered on, double-click the Power button of the receiver. The receiver indicator will flash rapidly in blue.
   ② When the receiver indicator flashes rapidly in blue, double-click the Power button of the transmitter to enter pairing mode. When paired successfully, the indicators will be in a solid blue state.
4. Connect the receiver to your camera.
5. You are ready to record.

Note: Due to 2.4GHz wireless frequency, signal can be easily attenuated. Please try to avoid obstacles, such as walls and buildings, and avoid close proximity to devices with 2.4GHz signal, such as high-power wifi antennas, smartphones with wifi in use, radios, etc.

FCC Warning

This device complies with part 15 of the FCC Rules. Operation is subject to the following two conditions:(1) This device may not cause harmful interference, and (2) this device must accept any interference received, including interference that may cause undesired operation.

Any Changes or modifications not expressly approved by the party responsible for compliance could void the user's authority to operate the equipment.

This equipment has been tested and found to comply with the limits for a Class B digital device, pursuant to part 15 of the FCC Rules. These limits are designed to provide reasonable protection against harmful interference in a residential installation. This equipment generates uses and can radiate radio frequency energy and, if not installed and used in accordance with the instructions, may cause harmful interference to radio communications. However, there is no guarantee that interference will not occur in a particular installation. If this equipment does cause harmful interference to radio or television reception, which can be determined by turning the equipment off and on, the user is encouraged to try to correct the interference by one or more of the following measures:

- Reorient or relocate the receiving antenna.
- Increase the separation between the equipment and receiver.
- Connect the equipment into an outlet on a circuit different from that to which the receiver is connected.
- Consult the dealer or an experienced radio/TV technician for help.

The device has been evaluated to meet general RF exposure requirement. The device can be used in portable exposure condition without restriction.

FCC ID: 2ARN3-SKM-W1TX

Specifications

Transmission Type	2.4GHz
Polar Pattern	Built-in Microphone: Omnidirectional
Frequency Response	20Hz-16kHz
SNR	＞80dB
Sensitivity	-42dB
Operating Range	30m (without obstacle)
RF Output Power	3.16mW
Battery Life	TX: About 4 Hours RX: About 4 Hours
Battery Capacity	TX: 85mAh RX: 65mAh
Charging Port	Type-C
Dimensions	TX: 38×23.1×16mm RX: 48×18.4×11.7mm
Weight	TX: 8g RX: 11g
Operating Temperature	0˚C to 50˚C
Storage Temperature	-20˚C to +55˚C

声明

感谢您选择七棵橡树！

请在使用前仔细阅读本手册，并严格按照说明进行操作和存储。请妥善保存好说明书以供将来参考。 如果用户手册不能帮助您解决某些问题，请向零售商寻求帮助或给我们发送电子邮件：www.sevenoak.biz。

注意事项

1.请勿擅自拆开机壳；
2.请勿将本机靠近热源，如加热器、烤箱或其他产生热量的设备；
3.电池不可自行更换；
4.请使用柔软的干布清洁本设备；
5.在使用和储存时，请注意防尘和防潮。

简介

七棵橡树SKM-W1是一款小巧便携的2.4GHz无线领夹式麦克风系统。搭配不同类型可拆卸转接头，可兼容智能手机、平板电脑、相机等多种设备。七棵橡树SKM-W1适用于手机直播、视频内容创作等应用场景。

特点

2.4GHz信号传输技术
手机直播、视频创作的理想选择
内置专业数字硅麦
搭配不同转接头，可实现多设备兼容性
具备静音、增益调节功能
体积小巧，便于携带

包装清单

SKM-W1 RX
×1

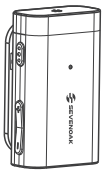

SKM-W1 TX
×1

防风毛套
×1

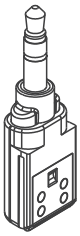

3.5mm
TRS 转接头
×1

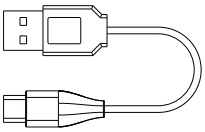

30cm Type-C
转 USB-A充电线
×2

拉链包
×1

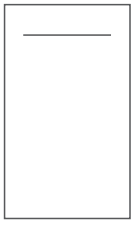

保修卡
×1

用户手册
×1

产品结构

1.领夹式发射器（SKM-W1 TX）

SKM-W1 TX是一款小巧便携的领夹式无线发射器，具有一键静音、增益调节等功能，产品内置高品质数字硅麦，无须外接麦克风，操作简便，可实现最佳的无线传输效果。

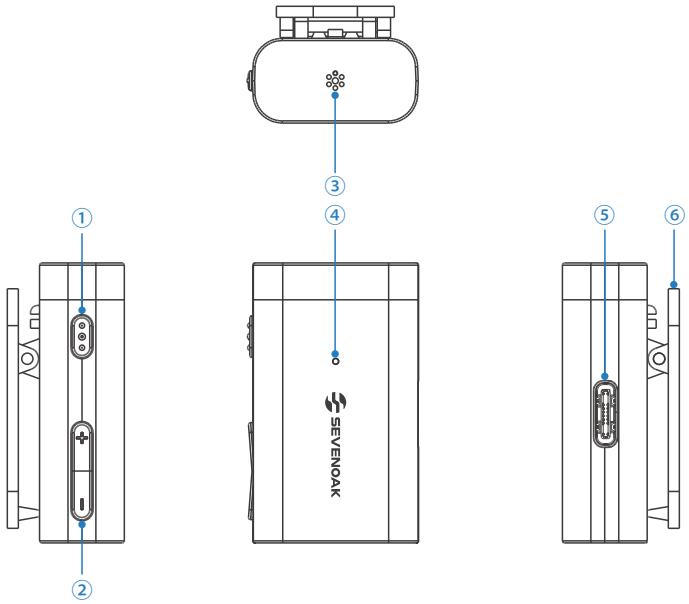

① 电源/静音键

功能	操作
开/关机	长按电源键3秒
静音开启/关闭	短按电源键

② +/-键

麦克风增益调节。
即使在电源关闭后，该参数设定仍然保留。

③ 内置麦克风

④ 指示灯

模式	指示灯状态
未联机状态	蓝灯慢闪
对码中状态	蓝灯快闪
联机成功状态	蓝灯常亮
静音开启状态	红灯慢闪
低电量状态	红灯快闪
充电状态	红灯常亮
充满电状态	红灯熄灭

⑤ 充电孔（标准Type-C接口）

⑥ 背夹

2. 便携式接收器（SKM-W1 RX）

SKM-W1 RX是一款超紧凑型无线接收器。搭配不同可拆卸转接头使用，可与智能手机和相机等多种设备兼容。

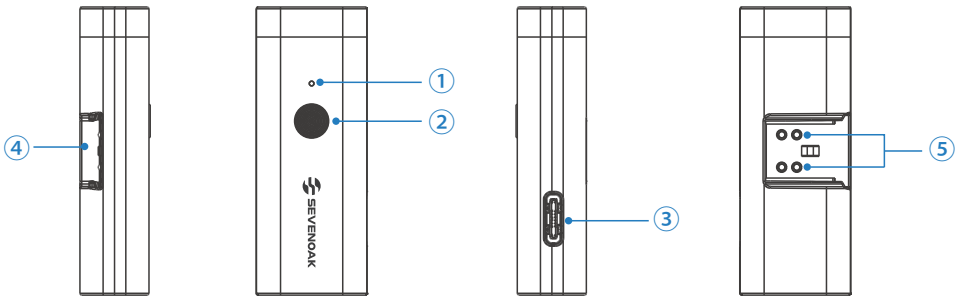

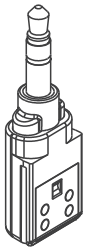

① 指示灯

模式	指示灯状态
未联机状态	蓝灯慢闪
对码中状态	蓝灯快闪
联机成功状态	蓝灯常亮
低电量状态	红灯快闪
充电状态	红灯常亮
充满电状态	红灯熄灭

② 电源键

长按电源键3秒，使产品开机/关机。

③ 充电孔（标准Type-C接口）

④ RX转接头卡槽

⑤ 触点

⑥ 3.5mm TRS转接头

适配单反、摄像机、录音笔以及其他带3.5mm TRS插孔的设备。

3. 可选配组件

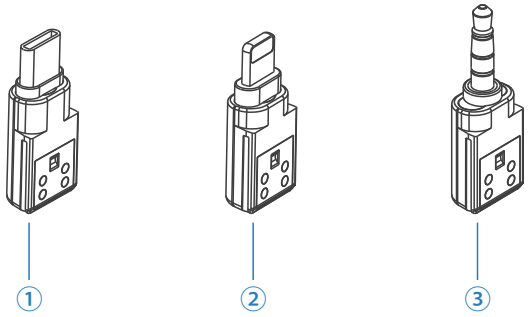

① TYPE-C转接头

适配主流安卓手机以及其他TYPE-C设备。

② MFi认证Lightning转接头

适配 iPhone, iPad, iPod等苹果设备。

③ 3.5mm TRRS转接头

适配手机、笔记本、平板以及其他带3.5mm TRRS插孔的设备。

注意：Lightning转接头、3.5mm TRRS转接头、Type-C转接头不包括在内，请根据需要自行购买。

配件安装指南

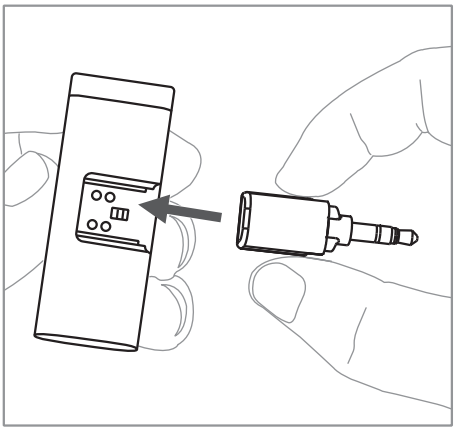

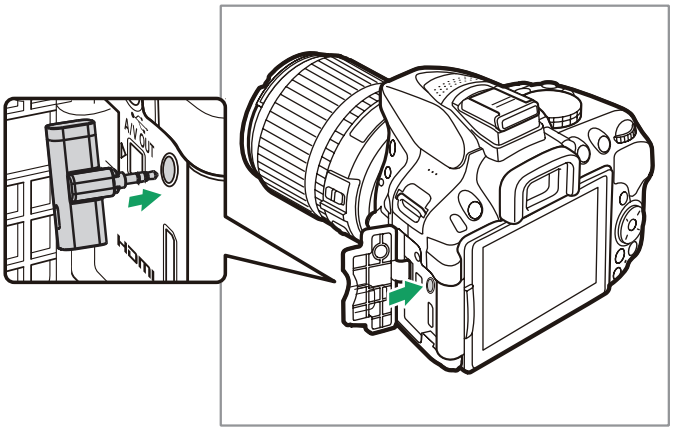

操作指南

1.长按电源键3秒，启动发射器。

2.参考“配件安装指南”，根据需要将正确的转接头插入接收器。长按电源键3秒，启动接收器。

3.发射器和接收器配对。

发射器和接收器在出厂默认设置是已配对成功，若无成功连接，请进行下一步配对操作：

①在发射器和接收器开机状态下，双击接收器电源键，接收器指示灯呈蓝灯快闪;

②在接收器指示灯呈蓝灯快闪状态时，双击发射器电源键，发射器和接收器会在10秒内完成对码。当配对成功，指示灯呈蓝灯常亮。

4.将接收器连接至相机。

5. 可以开始录音。

注意: 由于在2.4GHz频谱下，信号很容易受干扰，请尽量避开墙壁和建筑物等障碍物，避免接近2.4GHz频率的设备，如大功率WiFi天线、正在使用WiFi的智能手机、收音机等。

参数

传输类型	2.4GHz
拾音模式	内置麦克风：全向型
频率响应	20Hz–16KHz
信噪比	＞80dB
灵敏度	–42dB
操作范围	30米（无障碍）
射频输出功率	3.16mW
电池续航	TX: 约4小时 RX: 约4小时
电池容量	TX: 85mAh RX: 65mAh
充电接口	Type–C
尺寸	TX: 38×23.1×16mm RX: 48×18.4×11.7mm
重量	TX: 8g RX: 11g
操作温度	0℃ – 50℃
储存温度	–20℃ – 55℃

SHENZHEN JIAYZ PHOTO INDUSTRIAL., LTD.
The SEVENOAK logo is a trademark which is registered and owned by
Shenzhen Jiayz Photo Industrial., Ltd.
深圳市长丰影像器材有限公司 地址: 广东省深圳市龙华区观澜街道大富
社区硅谷动力智能终端产业园A16栋
TEL: 400 6131096
E-mail: sales@sevenoak.biz
www.sevenoak.biz

© 2021 Sevenoak inc.Visit us on the
web at www.sevenoak.biz