Open Energy for All

Data Transfer Stick

USER MANUAL

DTS-WiFi-G3
DTS-4G-G3
DTS-WL-G3

Legal Notice

Hoymiles has made every effort to ensure the accuracy and completeness of this manual. However, this manual may be changed and revised due to product enhancements or user feedback.

Hoymiles reserves the right to modify this manual without prior notice at any given time. The latest version of this manual can be found by visiting the Hoymiles official website *(www.hoymiles.com)* or scanning the QR Code below.

Warranty

Follow the installation instructions in this manual to ensure warranty compliance and reliability. The current warranty conditions can be accessed at *www.hoymiles.com*.

Contact Us

If you have technical queries or any questions concerning our products, please contact our support through the Hoymiles service portal:

Germany
service.de@hoymiles.com

Spain
service.es@hoymiles.com

France
service.fr@hoymiles.com

Italy
service.it@hoymiles.com

Netherlands
service.nl@hoymiles.com

Norway
service.no@hoymiles.com

Poland
service.pl@hoymiles.com

Finland
service.fi@hoymiles.com

Austria
service.at@hoymiles.com

Rest of the EU
service.eu@hoymiles.com

Brazil
service.br@hoymiles.com

Spanish-speaking countries
service.mx@hoymiles.com

USA
service.us@hoymiles.com

Canada
service.ca@hoymiles.com

Australia & New Zealand
service.au@hoymiles.com

Asia & Pacific
service.asia@hoymiles.com

Germany
+49 6994322186

France
+33 159131589

Netherlands
+31 852736388

Poland
+48 918821656

Brazil
+55 1148585231

North America
+1 8449964537

hoymiles.com

Revision History

V202502	This issue marks the initial official release.

Contents

1 About This Manual 1

1.1 Purpose 1

1.2 Audience 1

1.3 Validity 1

2 Safety Instructions 2

2.1 Safety Symbols 2

2.2 Additional Symbols 2

2.3 Safety Instructions 3

2.4 EU Directive Compliance 3

3 Product Introduction 4

3.1 Overview 4

3.2 Features 4

3.3 Applications 4

3.4 Dimensions 5

3.5 Technical Specifications 5

4 Installation 6

4.1 Wi-Fi/4G DTS Installation 6

4.2 WLAN DTS Installation 6

5 Indicators and Button 7

5.1 Indicators Status 7

5.2 Button Instruction 7

6 Network Configuration 8

1 About This Manual

1.1 Purpose

This manual contains important instructions regarding the installation and operation of the Hoymiles Data Transfer Stick (DTS). Please carefully read this manual before the installation, operation, and maintenance.

1.2 Audience

This document is only for qualified personnel. Only qualified personnel who have been trained or mastered relevant skills can install and maintain the product under the guidance of this document.

1.3 Validity

The DTS is only compatible with Hoymiles hybrid energy storage inverters and AC-coupled energy storage inverters. This document is valid for the following DTS models:

- DTS-WiFi-G3
- DTS-4G-G3
- DTS-WL-G3

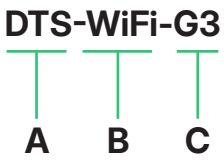

Item	Meaning	Description
A	Product name	DTS: Data Transfer Stick
B	Communication method	WiFi: Connects to the S-Miles Cloud via Wi-Fi 4G: Connects to the S-Miles Cloud via 4G WL: Connects to the S-Miles Cloud via WLAN
C	Generation	G3: The third generation

© 2024 Hoymiles Power Electronics Inc. All rights reserved.

2 Safety Instructions

2.1 Safety Symbols

Safety symbols are used in this manual as follows:

Symbol	Description
DANGER	This symbol indicates potential risks that, if not avoided, may lead to death or serious physical injury.
WARNING	This symbol indicates potential risks that, if not avoided, may lead to personal injury or device damage.
CAUTION	This symbol indicates potential risks that, if not avoided, may lead to device malfunctions or financial losses.
NOTICE	This symbol indicates potential risks that, if not avoided, may lead to minor injury or damage to the equipment.
NOTE	This symbol indicates an important step or tip that leads to the best results but is not safety or damage-related.

2.2 Additional Symbols

The product label contains the following symbols with their meanings described below:

Icon	Explanation
CE	**CE mark** The product complies with the requirements of the applicable EU directives.
FC	**FCC mark** The product complies with the FCC standard.
	Observe the documentation Read and understand all documentation supplied with the product.
	Treatment Electrical equipment that has reached the end of life must be collected separately and returned to an approved recycling facility to comply with the European Directive 2002/96/EC on Waste Electrical and Electronic Equipment and its implementation as national law. Return any devices you no longer need to an authorized dealer or an approved collection and recycling facility.

© 2024 Hoymiles Power Electronics Inc. All rights reserved.

2.3 Safety Instructions

The DTS has been designed and tested in compliance with international safety standards, and thus requires careful installation and operation. Installers must carefully read and strictly follow the safety instructions in this section. Failure to do so may result in:

- Injury or death to the installers or operators
- Damage to the DTS

DANGER!

Do not attempt to repair the device yourself. If you encounter any device issues, or need repair or warranty information, please contact us.

WARNING!

- Do not use Hoymiles products in a way that is not suggested by the manufacturer. Doing so may cause death or injury to persons or damage to the equipment.
- Read all instructions and warnings in the technical description and on the DTS before installing or using the device.
- Do not use the device in locations where wireless devices are not allowed.
- Keep the device away from water, fire, moisture, and hot environments to prevent damage.

CAUTION!

- Do not try to repair the DTS without approval from Hoymiles. If the DTS is damaged, send the DTS back to your installer for repair or replacement. Disassembling the DTS without approval from Hoymiles will invalidate the remaining warranty period.
- Hoymiles confirms that the product described in this guide meets the essential requirements and relevant provisions of the EU directives.

Radio Technology	2.4 G Wi-Fi
Radio Spectrum	Wi-Fi: 2412 to 2484 MHz Bluetooth LE: 2402 to 2480 MHz
Maximum Transmission Power	Wi-Fi: 15 dBm Bluetooth LE: 13.5 dBm

These technical parameters apply only to EU countries.

NOTICE

- Electrical installations: Perform all electrical installations in accordance with national and local regulations.
- To ensure optimal reliability and meet warranty conditions, install the DTS according to the instructions in this guide.
- This product is not a network device but can connect to a home router via Wi-Fi, leveraging the router's security functions to counter potential cybersecurity risks like DoS attacks.

2.4 EU Directive Compliance

This product complies with the following EU directives and can be used without restrictions in the European Union:

- Directive 2014/53/EU (RED) and 2009/125/EC: Relating to the provision of electrical equipment within certain voltage limits on the market (Low Voltage Directive).
- Directive 2011/65/EU and 2015/863/EU (RoHS): Restricting the use of certain hazardous substances in electrical and electronic equipment.

More detailed information can be found at https://www.hoymiles.com/.

© 2024 Hoymiles Power Electronics Inc. All rights reserved.

3 Product Introduction

3.1 Overview

DTS-G3 is the third-generation data transfer stick of Hoymiles, which is small and easy to install.

DTS-G3 supports communication methods including Wi-Fi, 4G and LAN, enabling the inverter to connect to the router or base station, and transmit data to the S-Miles Cloud for real-time monitoring and remote control. In addition, DTS-G3 supports Bluetooth for short-range communication between the inverter and App, offering users convenient control of power on/off, power adjustment, mode setting, and configuration parameters viewing via the App.

3.2 Features

- Plug and play
- Stable and reliable data transmission
- Supports Bluetooth local configuration
- IP66 protection

3.3 Applications

- **DTS-WiFi-G3**

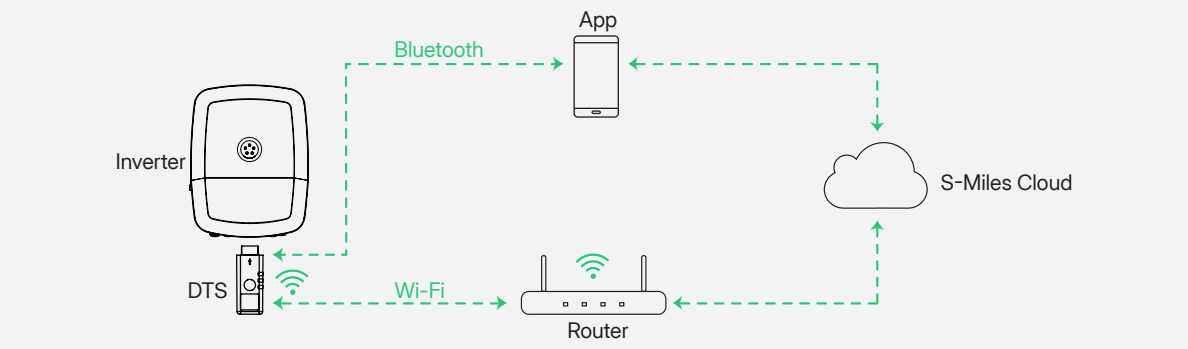

- **DTS-4G-G3**

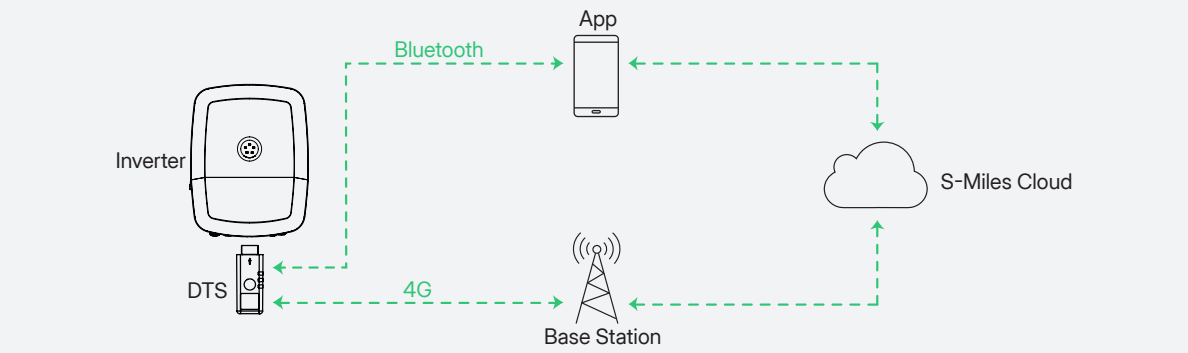

- **DTS-WL-G3**

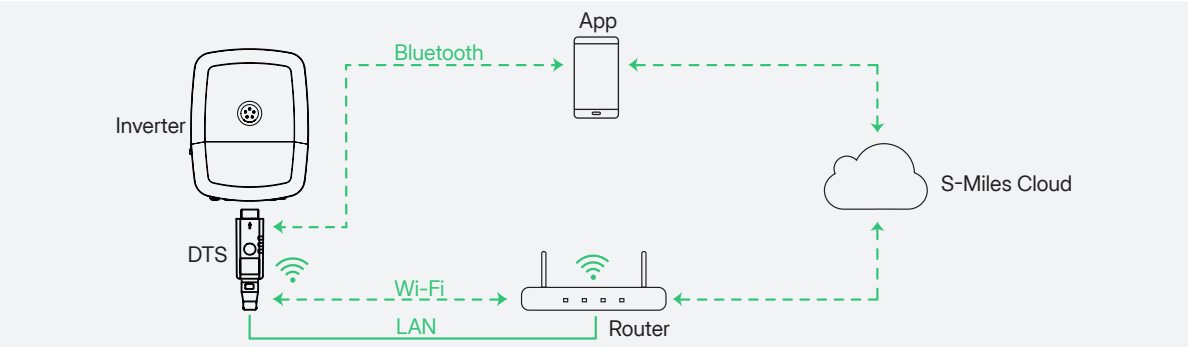

* DTS Interface: Connect and communicate with the inverter.
  Inverter Interface: Connect and communicate with the DTS.

© 2024 Hoymiles Power Electronics Inc. All rights reserved.

3.4 Dimensions

- **DTS-WiFi-G3 / DTS-4G-G3**

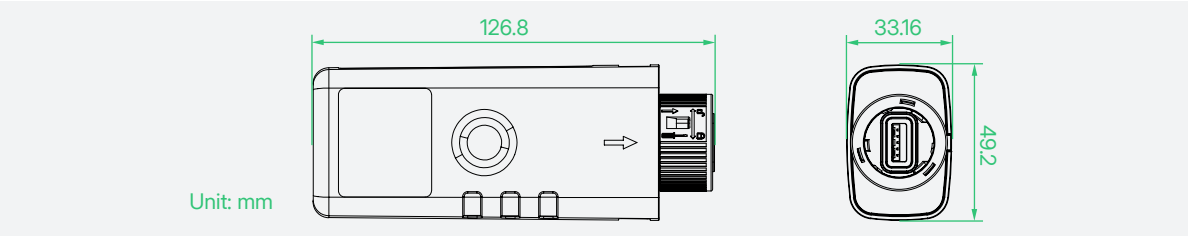

- **DTS-WL-G3**

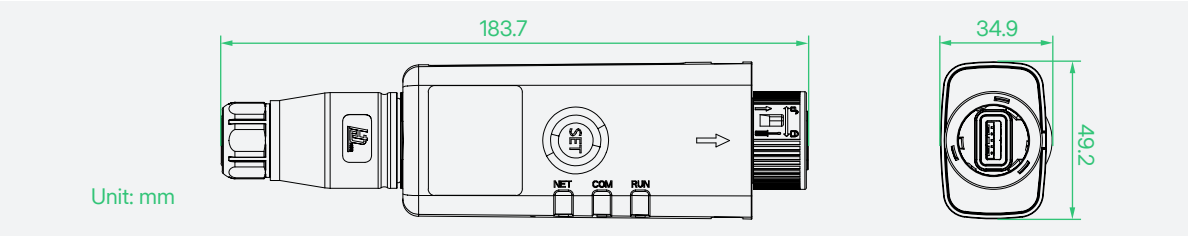

3.5 Technical Specifications

Model	DTS-WiFi-G3	DTS-4G-G3	DTS-WL-G3
Communication			
Max. inverter supported	10		
Data upload cycle (min)	5		
Indicator	LED × 3		
Connection interface	USB		
4G standard	/	4G: LTE-FDD / LTE-TDD 3G: WCDMA / HSDPA / HSUPA / HSPA+ 2G: GSM / GPRS / EDGE	/
Wi-Fi standard	IEEE 802.11 b/g/n @2.4 GHz		
LAN standard	/	/	10/100 Mbps adaptive; Max. length of network cable: 100 m
Bluetooth standard	Bluetooth 5.0		
Configuration method	BLE App		
General			
Operating voltage (V)	5		
Power consumption (W)	≤ 5		
Dimensions (mm)	49.2 × 126.8 × 33.16	49.2 × 126.8 × 33.16	49.2 × 183.7 × 34.9
Weight (g)	105		
Protection degree	IP66		
Installation method	Plug and play		
Environment			
Operating temperature range (°C)	-25 to +65		
Relative humidity	0 to 95%, no condensing		
Operating altitude (m)	≤ 4000		
Certifications and Standards			
Certificate	CE; NTC; PTA; RED18031; MIC; NBTC		

© 2024 Hoymiles Power Electronics Inc. All rights reserved.

4 Installation

4.1 Wi-Fi/4G DTS Installation

Step 1 Remove the DTS port cover on the bottom of the inverter.

Step 2 Insert the DTS into the DTS port. Listen for a click as they engage.

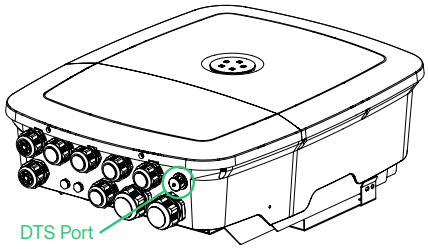

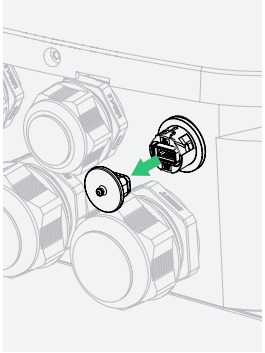

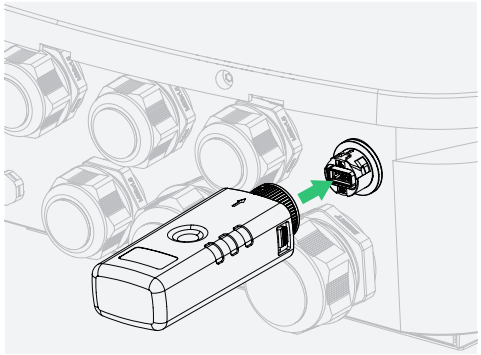

4.2 WLAN DTS Installation

Step 1 Turn the end of the DTS counterclockwise, and separate the DTS into four parts.

Step 2 Plug the LAN cable into the network port on the part 1.

Step 3 Slide part 2, 3 and 4 over the cable in sequence, and tighten all parts.

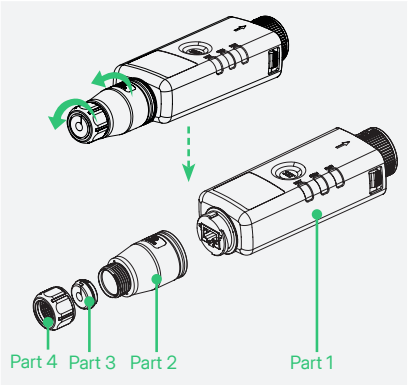

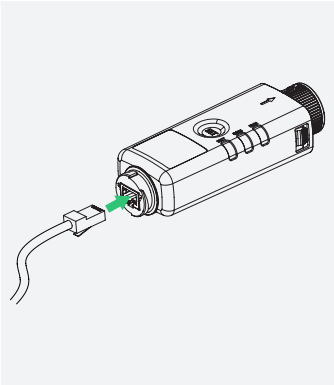

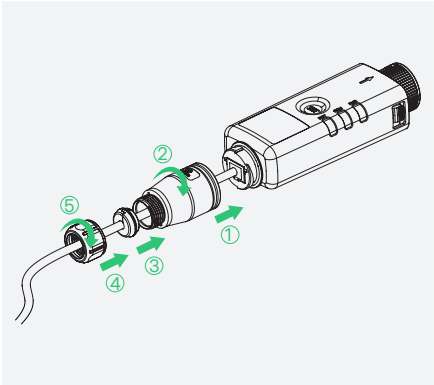

Step 4 Remove the DTS port cover on the bottom of the inverter.

Step 5 Insert the DTS into the DTS port. Listen for a click as they engage.

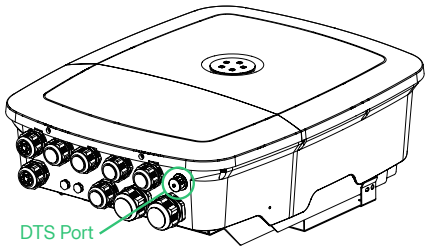

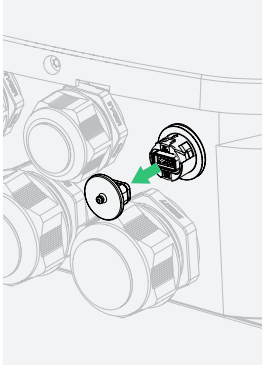

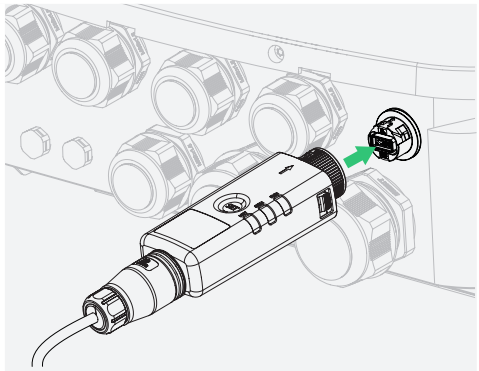

NOTICE

For both types of devices, if you need to remove the DTS, turn the lock ring counterclockwise, and unplug it.

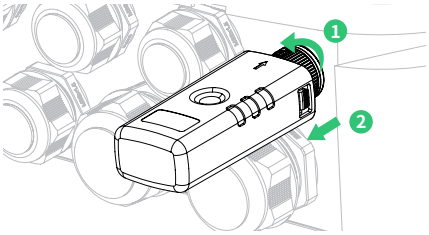

© 2024 Hoymiles Power Electronics Inc. All rights reserved.

5 Indicators and Button

5.1 Indicators Status

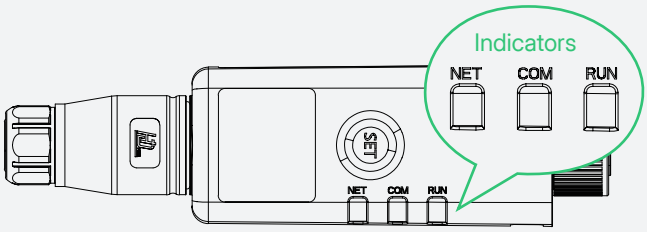

Indicator	Status	Indication
NET	On	The network is connected, and communication with the S-Miles Cloud is normal.
	Off	Network not connected
	Blinking	The network is connected, but communication with the S-Miles Cloud is abnormal.
COM	On	Communication with the inverter is normal.
	Off	Communication with the inverter is abnormal.
RUN	On	Connected to external power supply
	Off	Not connected to external power supply

5.2 Button Instruction

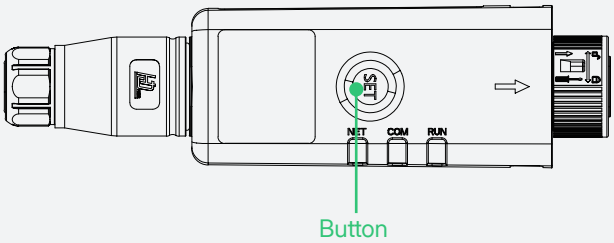

Operation	Function
Press two times	Reboot software
Press for 5s to 10s	Reset password

© 2024 Hoymiles Power Electronics Inc. All rights reserved.

6 Network Configuration

NOTICE

- The screenshots provided here are for reference only. The actual screens may vary.
- For additional details of App operation, see *S-Miles Installer App Operating Guide*.

Step 1 Scan the QR code below, or search for "S-Miles Installer" on the App Store (iOS) or Google Play Store (Android) to download the app.

Step 2 Open and log in to the app using your credentials.

Step 3 Tap **O&M** > **Network Config** . The app will scan for the Bluetooth of nearby devices.

Step 4 On the Via Bluetooth part, tap the DTS to be connected.

Step 5 Enter the PIN code (only required for the first connection, by default is 123456), and tap **Confirm**.

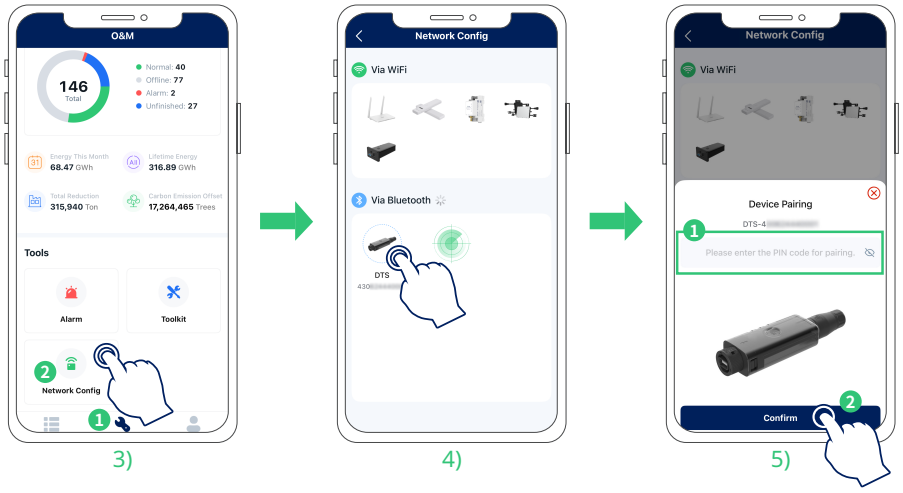

3) 4) 5)

Step 6 Connect to the network.

- ***Ethernet Mode*** (Only applicable to DTS-WL-G3): DTS and router are connected via LAN cable. Select **Ethernet** and tap **Send to DTU**.
- ***Wi-Fi Mode***: Select **Wi-Fi**. Enter the router's Wi-Fi name and password, and tap **Send to DTU**.

Step 7 When the connection is successful, tap **Finish**.

6) 7)

© 2024 Hoymiles Power Electronics Inc. All rights reserved.

FCC Statement
Any Changes or modifications not expressly approved by the party responsible for compliance could void the user's authority to operate the equipment.
This device complies with part 15 of the FCC Rules. Operation is subject to the following two conditions:
(1) This device may not cause harmful interference, and
(2) This device must accept any interference received, including interference that may cause undesired operation.

FCC Radiation Exposure Statement:

This equipment complies with FCC radiation exposure limits set forth for an uncontrolled environment .This equipment should be installed and operated with minimum distance 20cm between the radiator& your body.

Note : This equipment has been tested and found to comply with the limits for a Class B digital device, pursuant to part 15 of the FCC Rules. These limits are designed to provide reasonable protection against harmful interference in a residential installation. This equipment generates,uses and can radiate radio frequency energy and, if not installed and used in accordance with the instructions, may cause harmful interference to radio communications. However, there is no guarantee that interference will not occur in a particular installation. If this equipment does cause harmful interference to radio or television reception, which can be determined by turning the equipment off and on, the user is encouraged to try to correct the interference by one or more of the following measures: —Reorient or relocate the receiving antenna.
—Increase the separation between the equipment and receiver.
—Connect the equipment into an outlet on a circuit different from that to which the receiver is connected.
—Consult the dealer or an experienced radio/TV technician for help.

ISED RSS Warning/ISED RF Exposure Statement
ISED RSS Warning:
This device complies with Innovation, Science and Economic Development Canada licence-exempt RSS standard(s). Operation is subject to the following two conditions: (1) this device may not cause interference, and (2) this device must accept any interference, including interference that may cause undesired operation of the device.

Le présent appareil est conforme aux CNR d'ISED applicables aux appareils radio exempts de licence.L'exploitation est autorisée aux deux conditions suivantes:
(1) l'appareil ne doit pas produire de brouillage, et
(2) l'utilisateur de l'appareil doit accepter tout brouillage radioélectrique subi, même si le brouillage est susceptible d'en compromettre le fonctionnement.

ISED RF exposure statement:
This equipment complies with ISED radiation exposure limits set forth for an uncontrolled environment. This equipment should be installed and operated with minimum distance 20cm between the radiator& your body.This transmitter must not be co-located or operating in conjunction with any other antenna or transmitter.
Le rayonnement de la classe b repecte ISED fixaient un environnement non contrôlés.Installation et mise en œuvre de ce matériel devrait avec échangeur distance minimale entre 20 cm ton corps.Lanceurs ou ne peuvent pas coexister cette antenne ou capteurs avec d'autres.

© 2024 Hoymiles Power Electronics Inc. All rights reserved.