Blast Control Unit Installation | UTM-00202

Rev 5 | 2019

APPROVER: 2019/04/09

Herman van der Walt yyyy/mm/dd

APPROVED

TABLE OF CONTENTS

1 USERS OF THIS MANUAL 3
1.1. Purpose of this manual 3
1.2. End User 3
1.2.1. Requirements 3
1.3. Training 3
1.4. Information 3
2 BLASTWEB SYSTEM PRODUCT SAFETY 4
2.1. DetNet Safety Philosophy 4
2.2. User Safety 4
2.3. Transportation, Storage and Handling 4
2.4. Maintenance Schedule 4
2.5. Information in case of emergency 4
2.6. Warning, Caution, and Note Statements 5
2.7. DISCLAIMER 5
2.8. RF compliance - FCC (USA) and ICES (Canada) 6
2.8.1. Unauthorised Changes 6
2.8.2. Radio Interference 6
2.8.3. FCC Class A digital device notice 6
2.8.4. Labelling Requirements for the Host device 6
2.8.5. CAN ICES-3 (A) / NMB-3 (A) 6
3 INSTALLING BLAST CONTROL UNIT 7
3.1. Mounting BCU to the Pole underground 7
3.2. Connecting Main Power 7
3.3. Connecting Communication Network 9
3.3.1. Ethernet Communication Network 9
3.4. Copper Communication Network: 10
3.5. Connecting Auxiliary Relay 11
3.5.1. Connecting of the Auxiliary relays 12
3.6. Connecting Blasting Network 12
3.7. Allocating BCU ID 13
3.8. Allocating BCU IP Address 13

DetNet South Africa Copyright © 2019

1 USERS OF THIS MANUAL

DetNet endeavours to upgrade BlastWeb software annually to comply with new challenges and needs faced by Centralized Blasting users in the market. As new software becomes available, the DetNet version control policy requires that all control equipment be upgraded to ensure support is provided on the latest software version installed on Surface Blast Controllers as deployed on customer sites.

1.1. Purpose of this manual

The purpose of this manual is to provide a step-by-step guideline explaining how to successfully perform an installation of a BCU.

NOTE	**This manual is only to be used for the BlastWeb System and the applicable software version as displayed.**

1.2. End User

1.2.1. Requirements

- Only trained personnel, and personnel found competent, are allowed to operate the system.
- Users of the system shall be aware of the recommended procedures for using the BlastWeb BCU System as per manufacturer's recommendations.
- These recommendations do not supersede the method as required by local mine, explosives or statutory regulations/procedures/codes of practise regarding the use of detonators. In such cases, the MOST STRINGENT set of rules between the mine, explosives or local regulations/procedures/codes of practise and the manufacturer must be followed.

1.3. Training

Training and software upgrades shall only be performed by a DetNet SA subject matter expert.
Contact the DetNet head office for additional information.

WARNING	**ALL USERS OPERATING THE BCU SYSTEM SHALL HAVE SUCCESSFULLY COMPLETED THE SPECIFIC TRAINING BEFORE PERFORMING ANY WORK WITH THE DEVICE(S).**

1.4. Information

Refer to http://www.detnet.com/ for additional detail and documentation.

DetNet South Africa Copyright © 2019

2 BLASTWEB SYSTEM PRODUCT SAFETY

WARNING	**ELECTRONIC DETONATORS ARE TOTALLY DIFFERENT TO CONVENTIONAL ELECTRIC DETONATORS AND ABSOLUTELY NO CONNECTION WITH CONVENTIONAL ELECTRIC DETONATORS OR ANY OTHER ELECTRONIC DETONATORS IS POSSIBLE AS IT CAN LEAD TO UNINTENDED INITIATION. ALL USERS OPERATING THE ELECTRONIC INITIATION SYSTEM SHALL HAVE SUCCESSFULLY COMPLETED THE SPECIFIC TRAINING BEFORE PERFORMING ANY WORK WITH THE DEVICE(S). DO NOT USE ANY DEVICES OTHER THAN THOSE SPECIALLY DESIGNED FOR THIS TYPE OF ELECTRONIC DETONATOR.**

2.1. DetNet Safety Philosophy

DetNet safety philosophy is to design, manufacture and provide control equipment, detonators and accessories to the highest safety standards.

- SmartKeys remains in possession of the accountable person, and should only be used to authorize the blast process at such a time as stipulated by the Mine after completion of the required Risk Assessment.
- All products must conform to local and international standards before it is sold for use.
- DetNet complies to ISO 9001, SANS 551:2009, CEN/TS 13763-27 which is acceptable to countries we operate in; in countries not subscribing to the above marks, we advise users to engage with DetNet to ensure that all equipment comply to local regulations.

2.2. User Safety

Safety is ensured when the user supplements the product's in-built safety systems through adequate training in the safe use of the product:

- Induction training
- Refresher training

DetNet continuously upgrades software to make our products more user friendly and to ensure that users stay abreast on latest developments, it is important that users get trained on the relevant changes before their equipment is updated.

2.3. Transportation, Storage and Handling

BlastWeb equipment must be transported, stored, handled and used in conformity with all federal, state, provincial and local laws and regulations. Control equipment and accessories should be handled with due care and not dropped, mishandled, subjected to excessive vibration or exposed to any chemical agents. Connectors should be kept clean and the equipment must be kept in a safe environment to avoid misappropriation or misuse.

2.4. Maintenance Schedule

All equipment in the field will need to be returned to DetNet, or its repair centres, for service at the following intervals:

- Handheld Equipment (Tagger, etc.) – 18 Months.
- Other equipment (Excluding accessories) – 24 Months.

2.5. Information in case of emergency

Refer to http://www.detnet.com/ for additional detail and documentation.

DetNet South Africa Copyright © 2019

2.6. Warning, Caution, and Note Statements

WARNING, ***CAUTION***, and ***NOTE*** statements are used throughout this manual to emphasise important and critical information. Observe these statements to ensure safety and to prevent product damage. The statements are *defined as follows:*

WARNING	**A WARNING MEANS THAT INJURY OR DEATH IS POSSIBLE IF THE INSTRUCTIONS ARE NOT OBEYED.**

Warnings draw special attention to anything that could injure or kill the reader/user. *Warnings* are generally placed before the step in the procedure they relate to. Warning messages are repeated wherever they apply.

CAUTION	**A CAUTION MEANS THAT DAMAGE TO EQUIPMENT IS POSSIBLE.**

Cautions draw special attention to anything that could damage equipment or cause the loss of data and will normally describe what could happen if the caution is ignored. *Cautions* are generally placed before the step in the procedure they relate to.

NOTE	**Notes are added to provide additional information.**

Notes are used to emphasise important information by visually distinguishing this from the rest of the text. Notes can contain any type of information except safety information, which is always placed in cautions or warnings.

Refer to http://www.detnet.com/ for additional detail and documentation.

2.7. DISCLAIMER

This document forms part of the User Manual for the BlastWeb System and is considered to be confidential. This document contains restricted information for company and channel partners' application only.
Should any of the restricted information contained in this document be disclosed to any third party either intentionally or unintentionally, DetNet South Africa will not be held responsible, accountable or liable for any resulting event and or issue.

DetNet South Africa Copyright © 2019

2.8. RF compliance - FCC (USA) and ICES (Canada)

2.8.1. Unauthorised Changes

DetNet South Africa has not approved any changes or modifications to this device by the user. Any changes or modifications could void the user's authority to operate the equipment.

DetNet South Africa *n'approuve aucune modification apportée à l'appareil par l'utilisateur, quelle qu'en soit la nature. Tout changement ou modification peuvent annuler le droit d'utilisation de l'appareil par l'utilisateur.*

2.8.2. Radio Interference

This device complies with Part 15 of the FCC Rules and Industry Canada licence-exempt RSS standard(s). Operation is subject to the following two conditions: (1) this device may not cause interference, and (2) this device must accept any interference, including interference that may cause undesired operation of the device.

Le présent appareil est conforme aux CNR d'Industrie Canada applicables aux appareils radio exempts de licence. L'exploitation est autorisée aux deux conditions suivantes: (1) l'appareil ne doit pas produire de brouillage, et (2) l'utilisateur de l'appareil doit accepter tout brouillage radioélectrique subi, même si le brouillage est susceptible d'en compromettre le fonctionnement.

2.8.3. FCC Class A digital device notice

This equipment has been tested and found to comply with the limits for a Class A digital device, pursuant to part 15 of the FCC Rules. These limits are designed to provide reasonable protection against harmful interference when the equipment is operated in a commercial installation. This equipment generates, uses and can radiate radio frequency energy and, if not installed and used in accordance with the instructions, may cause harmful interference to radio communications. Operation of this equipment in a residential area is likely to cause harmful interference in which case the user will be required to correct the interference at his own expense.

2.8.4. Labelling Requirements for the Host device

The host device shall be properly labelled to identify the modules within the host device. The certification label of the module shall be clearly visible at all times when installed in the host device, otherwise the host device must be labelled to display the FCC ID and IC of the module, preceded by the words "Contains transmitter module", or the word "Contains", or similar wording expressing the same meaning, as follows:
Contains FCC ID: 2ARNH-0743337A

L'appareil hôte doit être étiqueté comme il faut pour permettre l'identification des modules qui s'y trouvent. L'étiquette de certification du module donné doit être posée sur l'appareil hôte à un endroit bien en vue en tout temps. En l'absence d'étiquette, l'appareil hôte doit porter une étiquette donnant le FCC ID et le IC du module, précédé des mots « Contient un module d'émission », du mot « Contient » ou d'une formulation similaire exprimant le même sens, comme suit :
Contains IC: 24476-0743337A

2.8.5. CAN ICES-3 (A) / NMB-3 (A)

This Class A digital apparatus complies with Canadian ICES-003.

Cet appareil numérique de classe A est conforme à la norme canadienne ICES-003.

DetNet South Africa Copyright © 2019

3 INSTALLING BLAST CONTROL UNIT

3.1. Mounting BCU to the Pole underground

The recommended height of the pole should be equal to the average height of a human which is 1.8m.
The maximum diameter of the pole is 82mm
The Blast Control Unit weighs approximately 50kg
For mounting the BCU to the pole, see pictures attached below.

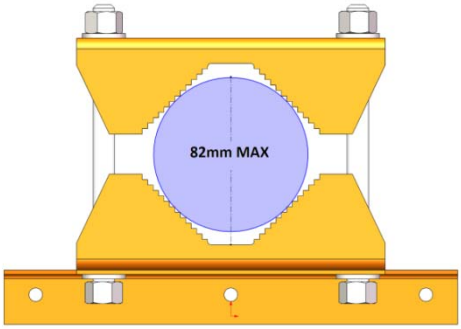

3.2. Connecting Main Power

The Blast Control Unit supports 115Vac, 230Vac and 525Vac.
Ensure that the Main Input Supply is switched OFF at the source before connecting the Main power supply cable.
Ensure that the Power Supply Units' mains switch BCU is switched OFF.

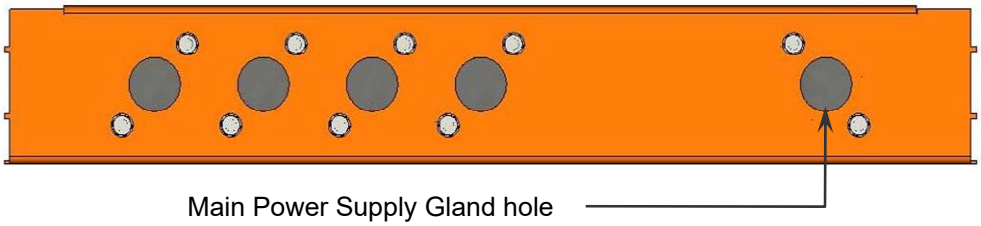

Pull the Main Power Supply cable through front connection rail and connect it to the cable gland directly below the Din connector rail.

Connect Earth to the Yellow and Green connection block on the left of the Main Power supply Switch.
Connect Neutral and Live to the right-hand top terminals of the Power Supply Main Input Switch Phase 1 will be on the left-hand terminal (opposite the blue wire at the bottom of the switch) and Phase 2 on the right-hand terminal (opposite the brown wire at the bottom of the switch).

DetNet South Africa Copyright © 2019

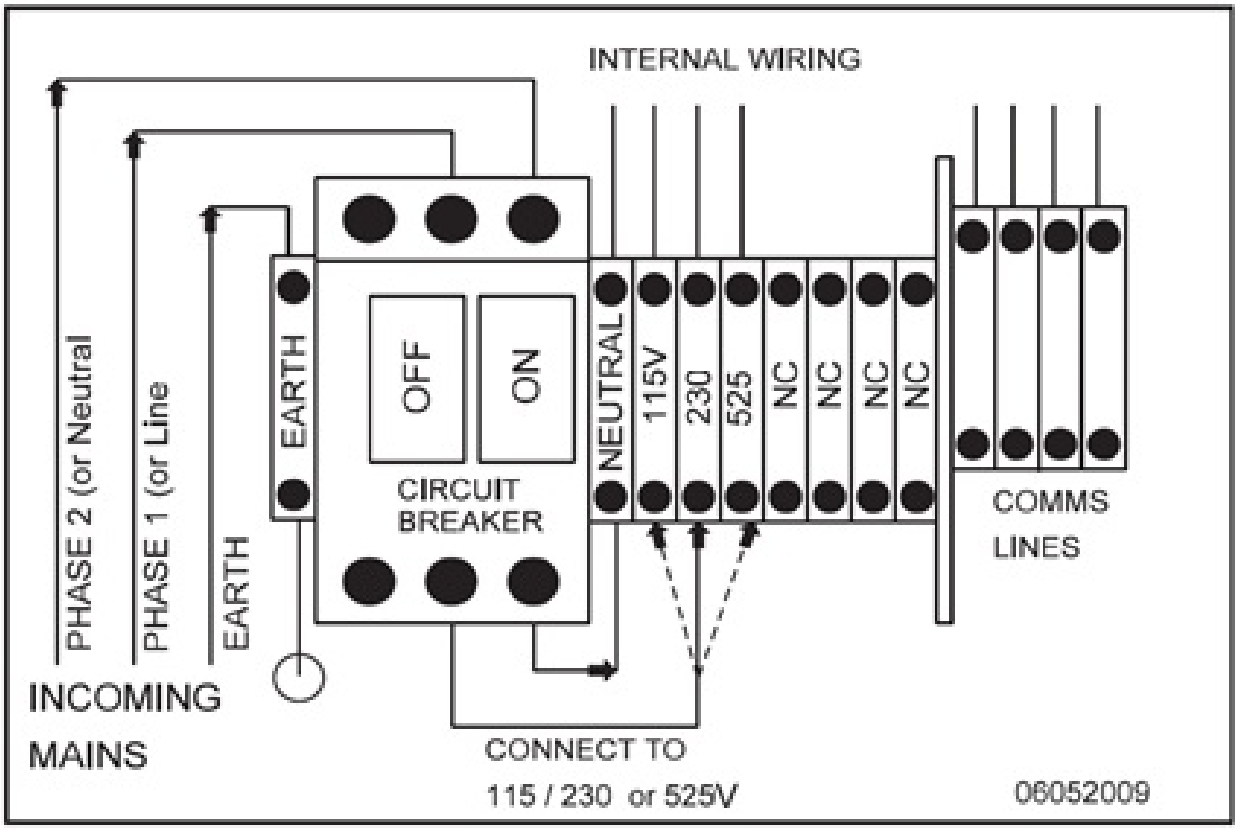

On the Din Rail, next to the Power Supply Main Input Switch, change the live wire (Brown) in the bottom of the connection block opposite the correct voltage supply line: the supply voltage wires at the top of the connector is colour coded as follows: Red - 110V; Brown - 220V and Black - 525V. Refer to the wiring diagram on the cover plate.

Connect the battery terminals, because the unit is shipped with terminals disconnected to prevent the battery power from being drained.
Switch the Main Power Supply On at the source and then switch the Power Supply's Main Input Switch On at the BCU.
Perform a proper test to verify that the correct voltages are available at all relevant points by pressing the debug button and checking the voltages displayed at the relevant points.

DetNet South Africa Copyright © 2019

3.3. Connecting Communication Network

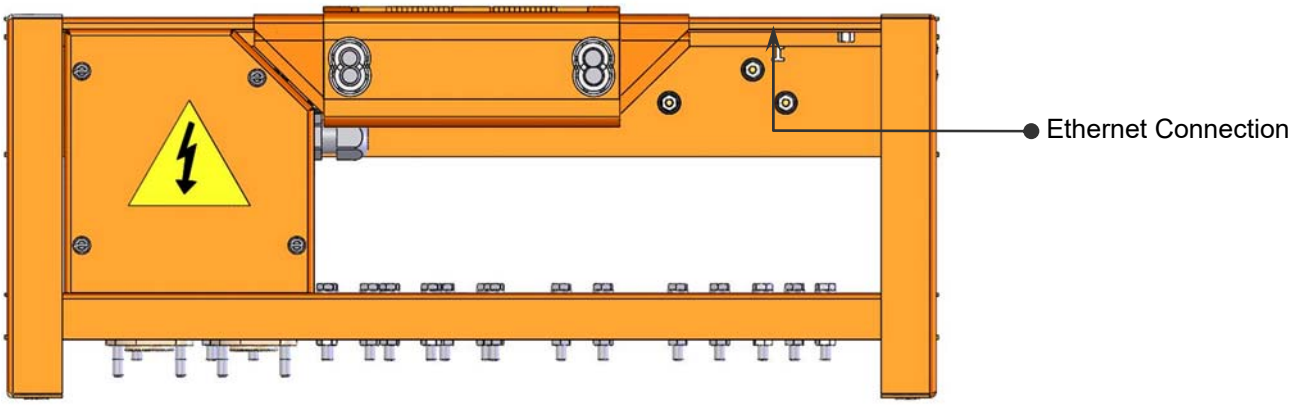

3.3.1. Ethernet Communication Network

Pull the Ethernet cable through the back-connection rail.
Find the Ethernet RJ 45 connector (Belgin) below the Power Supply Unit on the opposite side of the Relay Box.

Remove the Belgin coupling cap by unscrewing it. Insert the Ethernet male connector into the RJ 45 female connector plug.
Observe that the “Link” LED on the UI is ON, indicating that the Ethernet line is connected correctly. Also observe that the “Data” LED on the UI flashes continuously indicating communication with the Surface Blast Controller.
Also observe that the Comms LED is ON indicating communication between the BCU and the Surface Blast Controller.

DetNet South Africa Copyright © 2019

3.4. Copper Communication Network:

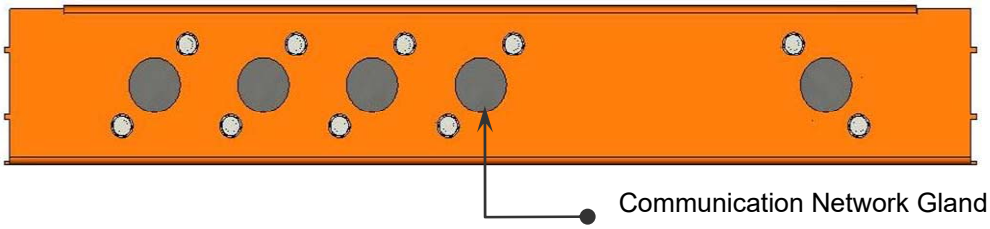

Pull the Copper cable through cable gland and earth it by clamping the armouring in the gland.
Allow approximately 50cm of twisted pair cable to be pulled through to the front.
Push the twisted pair cable through the foam gasket underneath the Din connection rail.
Connect the wire pair opposite the wires on the Din Rail connection block found to the left of the Power Supply Main Input Switch protection plate.

Note that in the case of voice comms. modules, two extra wires will be present and the communication lines must be connected as follows:

- Data comms on the red and Black wires on the left of the DIN connection block, and
- Voice comms on the yellow and red wires on the right of the DIN connection block.

These connections are not polarity sensitive and can be connected in any order.

DetNet South Africa Copyright © 2019

3.5. Connecting Auxiliary Relay

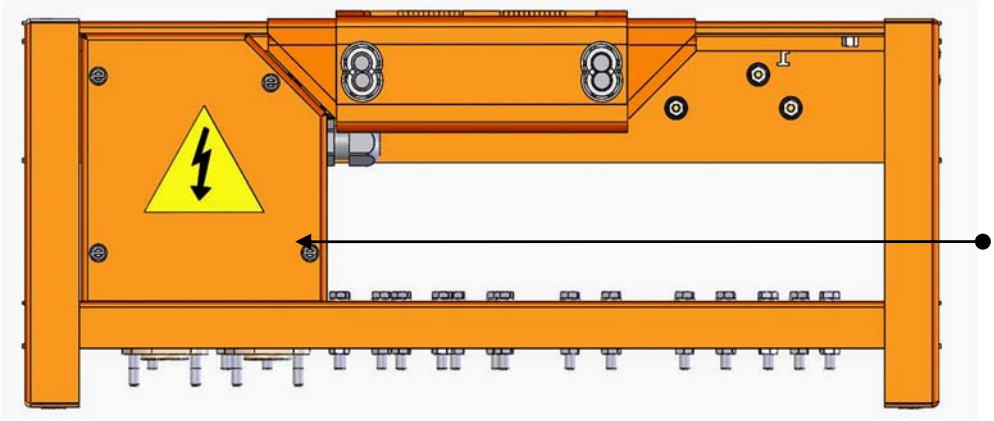

Relay 1 and Relay 2

NOTE	**When switching external devices from the Blast Control Unit, the external device should consume a max of 600Vac, 25A**

DetNet South Africa Copyright © 2019

3.5.1. Connecting of the Auxiliary relays

The two auxiliary relays can be connected to perform various functions such as controlling the water, air and electricity supply inside the stope during blasting and off-peak times. (When the blast command is sent to initiate blasts it will open relay one. When the blast voltage is raised it will trigger the second relay.)
If required, these relays can also be controlled from the Surface Blast Controller.
Each relay can switch 600Vac, 25A (MAX).
Two cable glands are provided for the secure connection of an armoured cable.
The housing for the relays is located on the bottom at the back or left-hand side of the BCU as indicated in the picture above. Connections are available for both the relays as well as Earth.
The relays are Normally Open by default.

3.6. Connecting Blasting Network

Connection rail is marked from 1 to 6

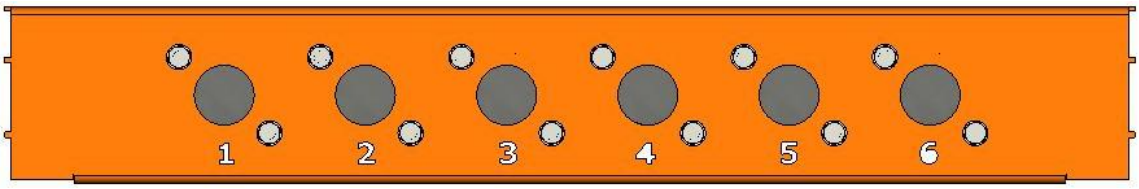

Pull the Copper cable through Cable glands and ensure that the armouring is properly earthed.
Allow approximately 10cm of cable pair to be pulled through to the screw terminals.

DetNet South Africa Copyright © 2019

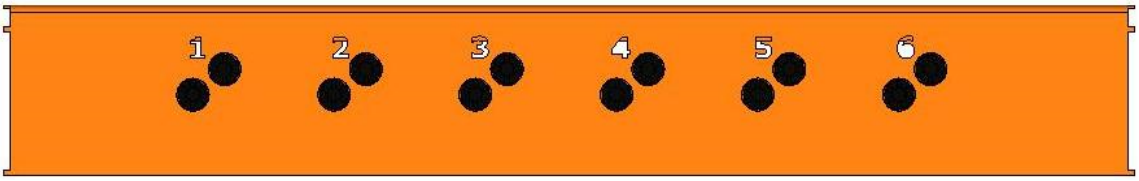

Connect the Blast Network to the corresponding screw terminals on the top connection rail.
Loosen the screw terminal, thread the cable through the hole and twist the ends towards the right-hand side to increase surface area to ensure proper connection then tighten the terminal screw properly. Ensure that the wires do not touch the body of the BCU, or each other, which shall cause a short.
Ensure that the Wire terminals are properly tightened to ensure no loose connections causing high leakage.

3.7. Allocating BCU ID

All BCU installed underground must be allocated their unique ID number which can be from 257 to 65000.
The ID numbers must be planned and reflected in BCU layout of the mine for all personnel who replace BCU and install new BCU to be aware of existing ID's before they allocate BCU ID.
To allocate BCU ID press the INFO soft key and insert password (9949) and press enter.
Then Click on the BOX CHANGE soft key
Then type in the new ID number and press ACCEPT soft key or press enter key.

3.8. Allocating BCU IP Address

All BCU installed underground must be allocated their unique IP address numbers when using Ethernet (Fiber) communication network.
The IP address are planned by mine IT department depending on whether they will isolate the network to the mine network.
All IP addresses must be planned and reflected in BCU layout of the mine for all personnel who replace BCU and install new BCU to be aware of existing ID's before they allocate BCU IP address.
To allocate BCU IP address, press the INFO soft key and insert password (9949) and press enter.
Then Click on the IP CHANGE soft key
Then type in the new IP address and press ACCEPT soft key or press enter key.
IP address should be three digit and if for instance the IP address is 192.168.1.2 the user will type on BCU as follows: 192.168.001.002 etc.

DetNet South Africa Copyright © 2019

Refer to the diagrams below for the screens displayed:

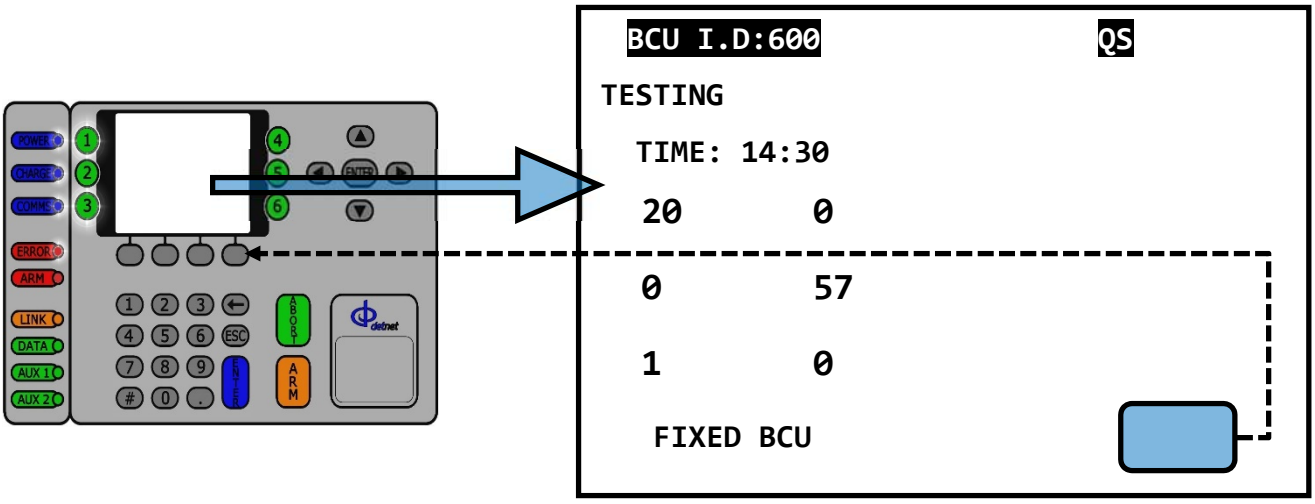

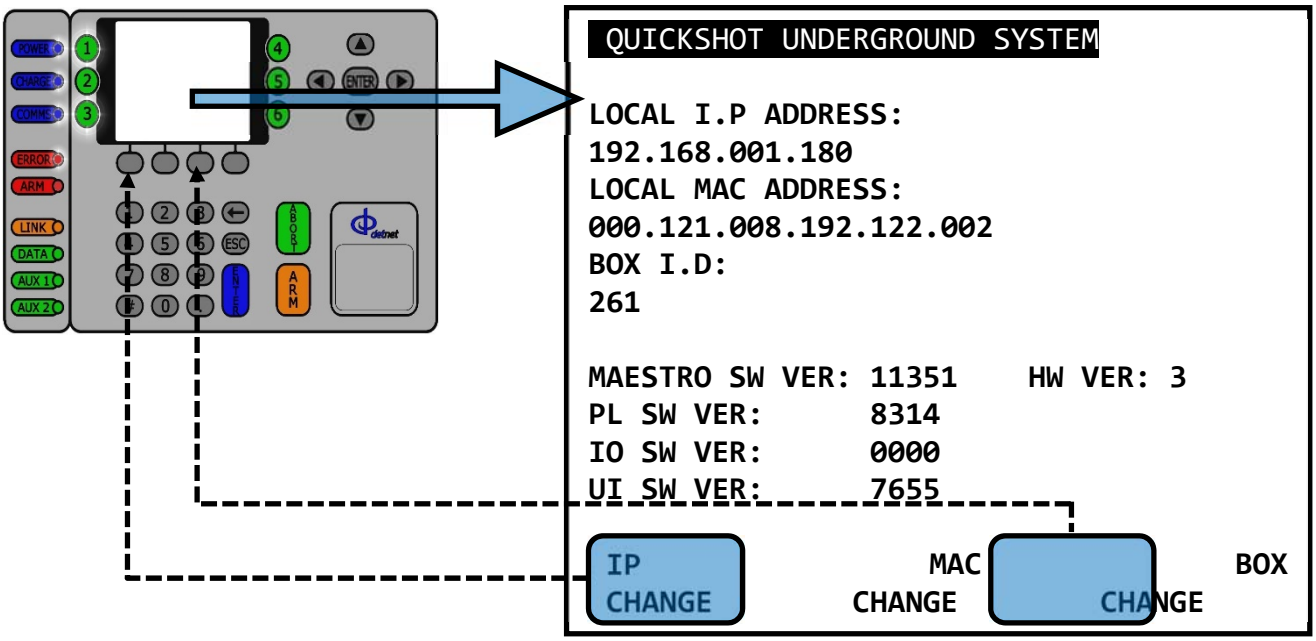

DetNet South Africa Copyright © 2019