Manual

SECOLO Security Lock SL1001

and

SECOLO Security Lock SL1000

Security Lock SL1001

Security Lock SL1000

VERSION 1.3

FMTec GmbH

6700 Bludenz / Austria

www.fmtec.eu

Functional Units of the Security Lock

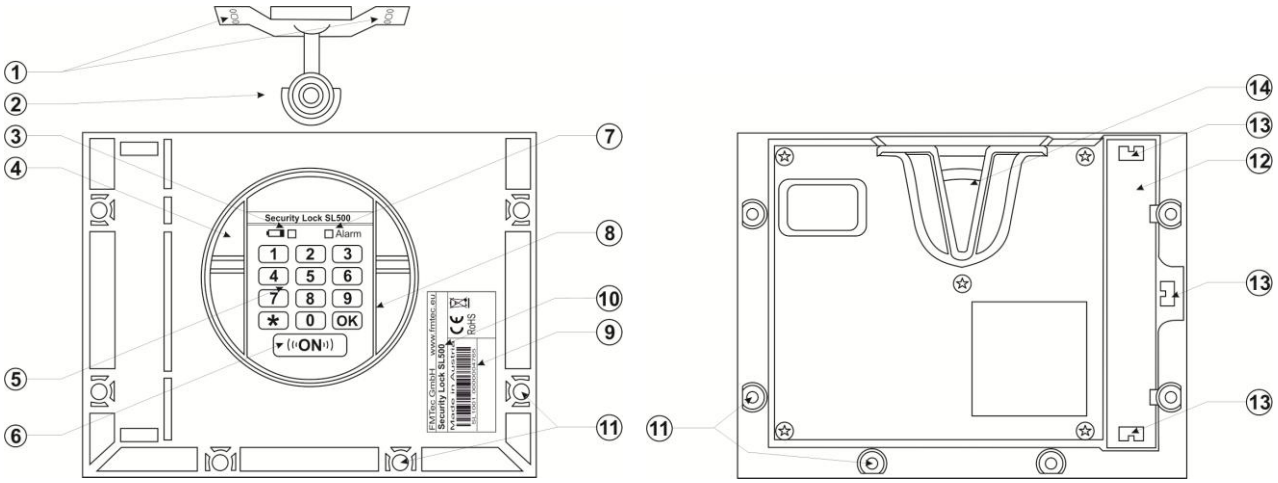

Legend

1. Hole for mounting self-adjusting bolt (d=4mm)
2. Self-adjusting bolt
3. Status lamp 1 (battery status)
4. Interface for emergency power supply
5. PIN-Pad on SL1001 only
6. RFID-reader for passive RFID-cards & ON button
7. Status lamp 2 (Alarm) on SL1001 only
8. Speaker hole
9. Serial number of the lock
10. Lock Type SL1001 or SL1000
11. Holes to mount the lock in the container (M5 screws)
12. Battery case cover
13. Battery case key hole
14. Motor driven locking mechanism, which can automatically lock, depending on the operation mode of the *Security Lock*.

 © 2019 FMTec GmbH

Technical Data

• Key-pad	Key **0** to **9** plus **OK**-key plus ***-key onSL1001 only
• RFID-reader	ON-button for wake-up of the reader for passive RFID-chips ISO15693 and ISO14443; working frequency: 13.56MHz max.: 0.0000007W
• Access rights	- Memory for up to 500 users in the lock - Unlimited users if the access rights on card;
• Event memory	In the lock is a memory for the latest 1,000 events by 100 access cards. Data retention in case of power failure
• RFID-Tracking Sensor	Sensor for tracking via Marker-Technology
• Data Interface	Radio communication: max. 0.00039W; 868MHz to 923.5 MHz
• Data security	AES128 encryption
• Power Supply:	4 x 1,5V Lithium Batteries AA
• Power Input:	Typically 33µW in “Sleep-Mode” Typically 150mW in “Active-Mode”
• Temperature:	-20°C up to + 60°C (in operation) -40°C up to + 60°C (in storage)
• Humidity:	5% up to 95% (non condensing)
• Dimensions:	(W x H x D) 196 x 152 x 53mm
• Weight:	850g (incl. bolt and batteries)
• Bolt:	- Self adjusting - Smoothly unlocking and locking - Anti blocking design (patented) - Breaking strength: 3.960 N (approx. 400kg)
• Mounting:	
Container walls:	0.5mm up to 7.0mm
Lock screws:	4 x M5 for standard mounting 6 x M5 for better closing the gap between the lock and the container wall
Bolt:	2 x M5 screws or 4 x 4mm rivets

 © 2019 FMTec GmbH

Safety Instructions!

Read the safety instruction carefully and transfer this information to any user manual of any security container where the SECOLO Security Lock SL1001 or SL1000 will be built in!

Danger of asphyxiation!
Do not allow humans or live animals to get into the box! Depending on the operation mode, the lid can get automatically locked!

Low static magnetic field within the range of the locking-bolt's intake of the lock!

Do not transport in the security containers any products that can leak explosive vapours, if the container is not sufficiently ventilated!

FMTec GmbH is not liable for direct or indirect damages caused by a failure of the security lock!

Always make sure that the batteries get replaces immediately after a low battery warning!
Use only the type of battery specified by the lock's manufacturer!

The lock includes 4 primary lithium metal hybrid cells, each with a capacity of 3000 mAh.
The primary lithium metal hybrid cells are protected against overload and short-circuit.

Please read the operating instructions carefully!

Instructions for maintenance and care

- The system is 100% maintenance-free (except batteries)!

  Do not use any lubricants!
- Do not use caustic cleaners such as acetone or similar!
- Do not sink the lock in water or clean it under running water!

Disposal instructions

The batteries, the electronic lock and the containers must be disposed according to the local regulations!

 © 2019 FMTec GmbH

Functions

The lock is operating with the SECOLO Management Software from where it gets the configuration of its functionality. In reason of that, the functionality depends on the application where it is in use. This is only a small excerpt from the list of all functions which can be activated by software switches.

Identification:

- User-ID — 1 to 12 digits (SL1001 only)
- User-ID + PIN — PIN: 4 to 8 digits (SL1001 only)
- RFID-Tag — User-Cards, Key-Fobs, Wristbands
- RFID-Tag + PIN — physical medium + personal knowledge = higher security (SL1001 only)
- 2-Man Rule — 4-eyes principle via one or more of the upper written identification process
- Location Based Access — Based on the RFID-Marker-Technology with an accuracy of 1m^2 inside the building

Tracking:

- Beacon Signal — The electronic lock can send periodically its UID in a beacon signal.
- Marker-Positioning — If the lock pass a Marker-Field it sends a position signal via UHF-interface to the server.
- Moving direction — Marker-Technology allows detecting the moving direction by a Marker-Gate which includes two Markers with different UID's.

Alarming channels:

- Acoustic — A speaker make big noise in case of alarm
- Radio signal — The lock sends radio signals in case of alarm which is transferred to the security centre via the Access point AP1000

Alarms:

- Lid too long open — When the lid is not closed in definable time, after a definable pre-warning the lid open alarm starts.
- Motor blocked — The motor cannot lock the container of any reason.
- Battery empty — The battery goes empty and needs to be changed
- Attack code — If a user is forced to unlock the container, he can use the attack code which sends an alarm.

Data Up- und Download:

Started automatically by timer signal, Marker signal or pressing the OK-button.

- Access rights — via UHF-Interface or RFID-Card, NFC
- Configuration — via UHF-Interface
- Events — via UHF-Interface
- Firmware update — via UHF-Interface

Warning!

FCC:

Changes or modifications not expressly approved by the manufacturer could void the user's authority to operate the equipment.

FCC Interference Statement (Part 15.105 (b))

This equipment has been tested and found to comply with the limits for a Class B digital device, pursuant to Part 15 of the FCC Rules. These limits are designed to provide reasonable protection against harmful interference in a residential installation. This equipment generates uses and can radiate radio frequency energy and, if not installed and used in accordance with the instructions, may cause harmful interference to radio communications. Howev¬er, there is no guarantee that interference will not occur in a particular installation. If this equipment does cause harmful interference to radio or television reception, which can be determined by turning the equipment off and on, the user is encouraged to try to correct the interference by one of the following measures:

- Reorient or relocate the receiving antenna.
- Increase the separation between the equipment and receiver.
- Connect the equipment into an outlet on a circuit different from that to which the receiver is connected.
- Consult the dealer or an experienced radio/TV technician for help.

 © 2019 FMTec GmbH

This device complies with Part 15 of the FCC rules. Operation is subject to the following two conditions:

(1) This device may not cause harmful interference, and
(2) this device must accept any interference received, including interference that may cause undesired operation.

IC:
This device complies with Industry Canada licence-exempt RSS standard(s). Operation is subject to the following two conditions:

(1) This device may not interference, and
(2) this device must accept any interference, including interference that may cause undesired operation of the device."

Le présent appareil est conforme aux CNR d'Industrie Canada applicables aux appareils radio exempts de licence. L'exploitation est autorisée aux deux conditions suivantes :
(1) l'appareil ne doit pas produire de brouillage, et
(2) l'utilisateur de l'appareil doit accepter tout brouillage radioélectrique subi, même si le brouillage est susceptible d'en compromettre le fonctionnement."

NCC:
Without permission, any company, firm or user shall not alter the frequency, increase the power, or change the characteristics and functions of the original design of the certified lower power frequency electric machinery.

The application of low power frequency electric machineries shall not affect the navigation safety nor interfere a legal communication, if an interference is found, the service will be suspended until improvement is made and the interference no longer exists.

經型式認證合格之低功率射頻電機，非經許可，公司、商號或使用者均不得擅自變更頻率、加大功率或變更原設計之特性及功能。

低功率射頻電機之使用不得影響飛航安全及干擾合法通信；經發現有干擾現象時，應立即停用，並改善至無干擾時方得繼續使用。 前項合法通信，指依電信法規定作業之無線電通信。
低功率射頻電機須忍受合法通信或工業、科學及醫療用電波輻射性電機設備之干擾。

 © 2019 FMTec GmbH