USER MANUAL V 1.02

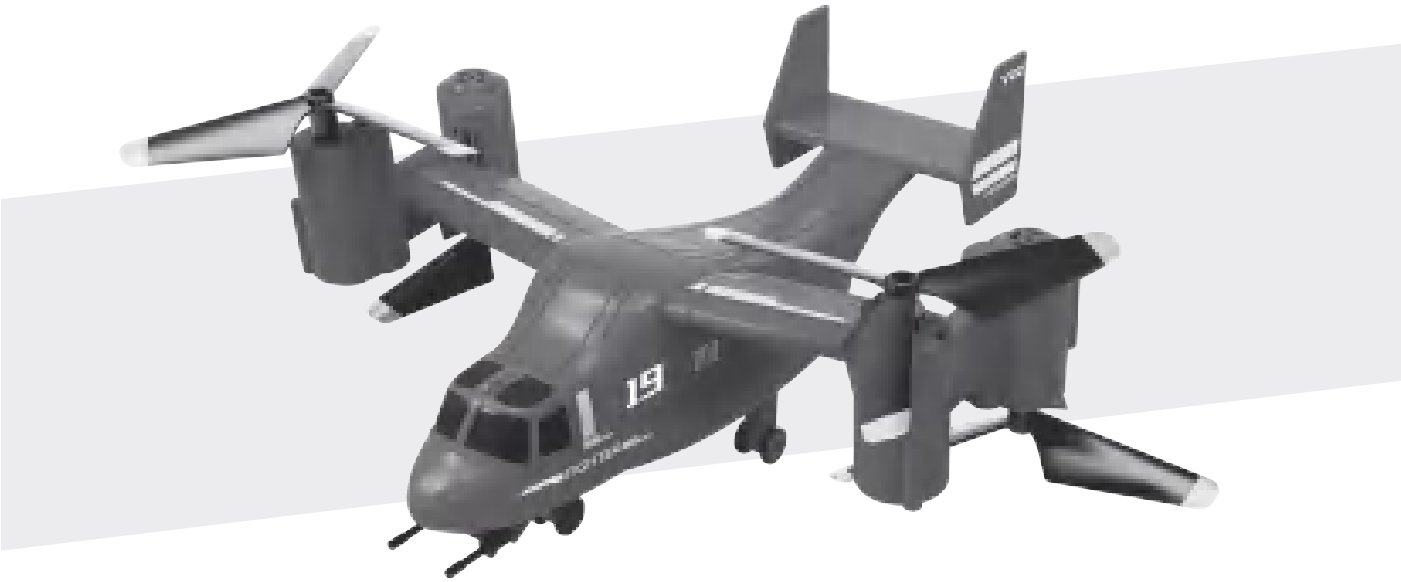

Thanks for your purchase.

Please read through this manual and refer to the instructions before you use the product.

Please keep it properly for future reference of daily maintenance and adjustment.

CONTENTS

Item List ---------- 3

Aircraft

About the Aircraft ---------- 3

Battery Charging ---------- 3

Propeller Installment and Replacement ---------- 4

Remote Controller

Buttons and Functions ---------- 5

Pre-flight Preparation

Battery Installment for the Aircraft ---------- 8

Battery Installment for the Remote Controller ---------- 8

Flight Environment ---------- 8

Pre-flight Inspection ---------- 9

Power On ---------- 9

Pair the Remote Controller with the Aircraft ---------- 9

Basic Operations

Basic Operations ---------- 10

Fine-tuning ---------- 12

Advanced Operations

Speed Switch ---------- 13

Headless Mode ---------- 13

Control Loss Protection ---------- 15

Emergency Stop ---------- 15

Troubleshooting ---------- 16

Aircraft and Display Stand Assembly ---------- 16
(only if the display stand is purchased)

Install the Mobile Phone Holder of the FPV Version ---------- 17

Camera and Mobile Phone Connection of the FPV Version ---------- 17

Item List

Before you start to use the product, please inspect the items in the package, which includes:

Aircraft:	1	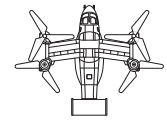
Propeller:	Each for A, B, C and D	
Propeller screws:	4	
Screwdriver:	1	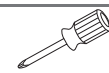
Remote Controller:	1	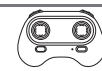
USB Charging Cable:	1	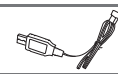
User Manual:	1	
Mobile phone holder (optional)	1	

Aircraft

About the Aircraft

The aircraft is featured with great maneuverability and stability, allowing for basic flights with altitude hold mode, plus additional functions such as headless mode, direction fine-tuning, speed switch, anti-stuck protection for propellers, low voltage alarm and auto-landing at low voltage.

Battery Charging

This product uses 3.7V batteries with charge and discharge management feature. So please use the original battery and exclusive charging cable for charging.

⚠ Fully charge the battery before initial use

To start charging, please connect the product with the USB charging cable, and insert USB charging cable into the laptop or phone' s adapter (quick charger not allowed).
The USB' s indicator turns red during charging and turns off when charging completes. Once done, please take off the charger. Ensure the battery has sufficient power each time before you use it.

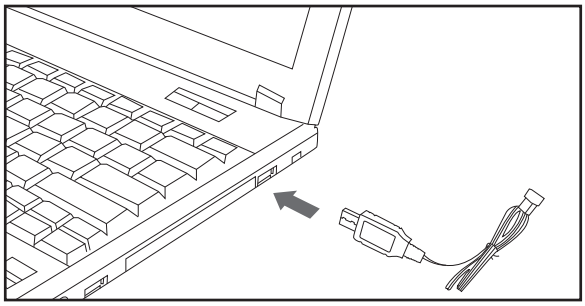

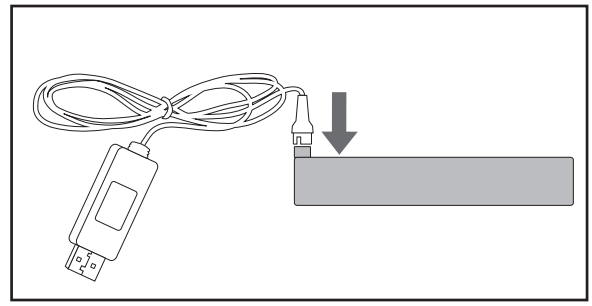

(1) Insert the USB interface into the laptop' s USB port or the charging base for your phone.
(2)Connect the battery connector with the USB charger.

Propeller Installment and Replacement

The propeller blades used in this product include model A, B, C and D propeller blades; please use the spare parts in the bag of spare parts for replacement if they are damaged.

(1) Please determine the front and back side of the propeller for your initial installment.

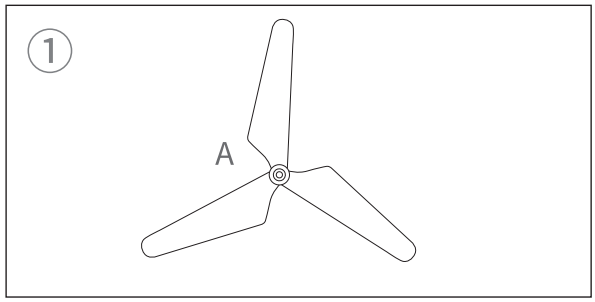

(2)You can refer to the Figure 2 and use the equipped screwdriver to unscrew the blade that needs to be replaced, remove the original propeller blade and press the new propeller blade on the shaft vertically, and re-tighten the screw.

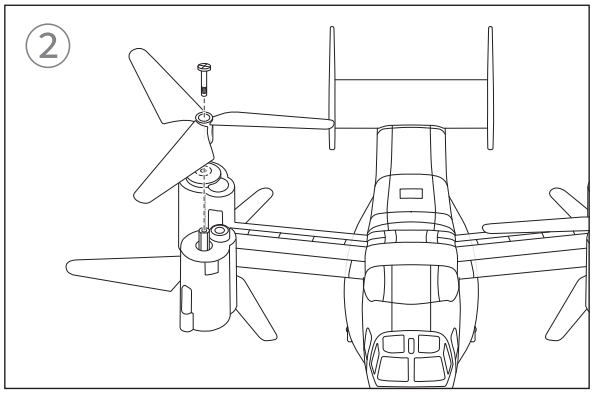

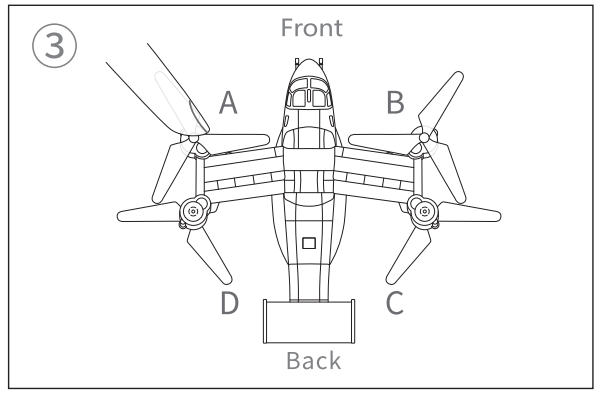

(3)Please check if the model of blade of the drone is consistent with the figure and install the propeller blades correctly referring to the Figure 3, otherwise the drone will not be able to fly normally.

(4) Once done, use your fingers to rotate the propellers to see if they are stuck. If they rotate smoothly, then it means they have been successfully installed. If it is stuck, use the screwdriver to loosen the blade screw slightly.

Remote Controller

Functions of the Remote Controller —— Ground Mode

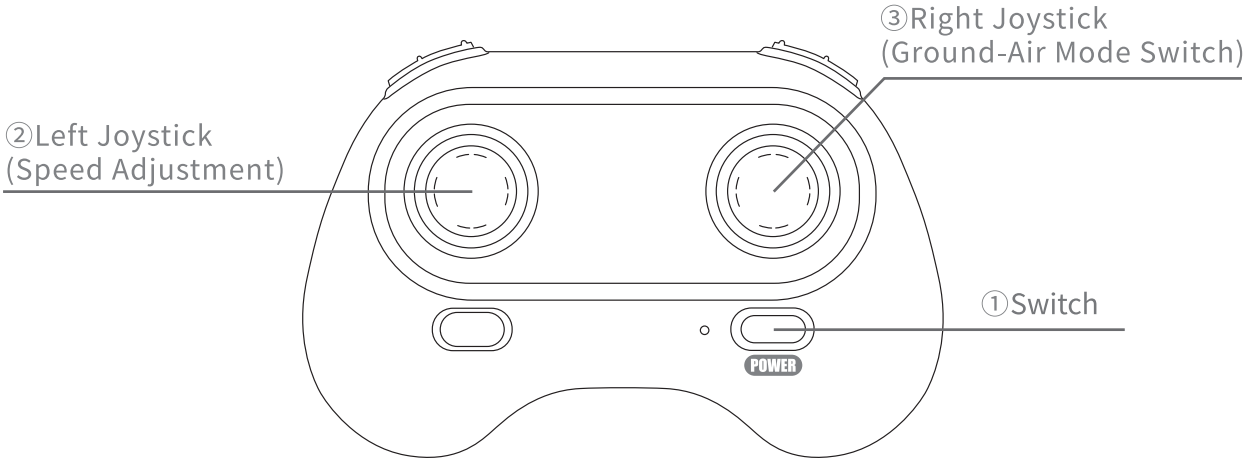

No.	Remote Controller	Functions
①	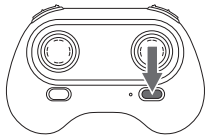	Press the Switch button, and the remote controller will start to deliver beeping sounds with its lights on, indicating it has been turned on. Press the power Switch button again, and the remote controller' s lights will disappear, indicating it has been turned off.
②	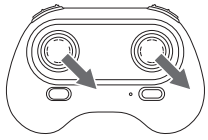	Place the aircraft on a level ground or flat surface, toggle the two joysticks towards the lower right corner at the same time, and the indicator lights on the aircraft will flash quickly, indicating the gyroscope calibration has been completed. Ensure this step has been correctly carried out, otherwise it will fail to use the Ground Mode.
③	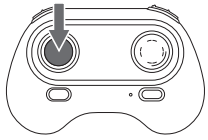	Press the left joystick vertically to switch speed.
④	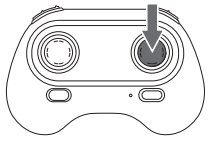	Press the right joystick vertically to switch from Air Mode to Ground Mode.

Remote Controller	Aircraft	Control Methods
	Forward	Toggle the left joystick upward, and the aircraft will glide forward.
	Backward	Toggle the left joystick downward, and the aircraft will glide backward.
	Counterclockwise Rotation	Toggle the right joystick to the left, and the aircraft will rotate counterclockwise.
	Clockwise Rotation	Toggle the right joystick to the right, and the aircraft will rotate clockwise.

Functions of the Remote Controller —— Air Mode

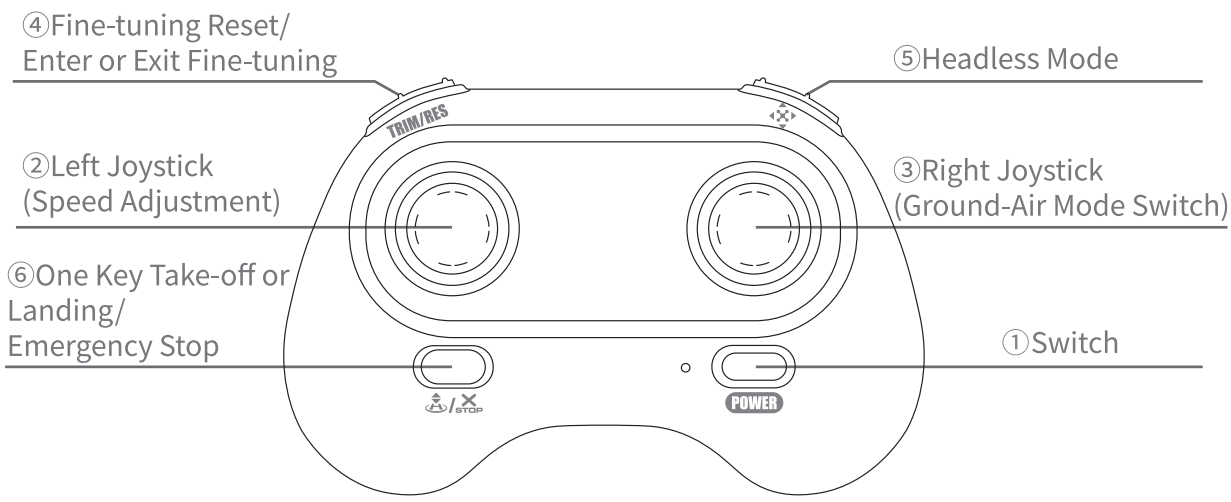

No.	Buttons	Functions
①	Switch	Press the Switch button, and the remote controller will start to deliver beeping sounds with its lights on, indicating it has been turned on. Press the power Switch button again, and the remote controller' s lights will disappear, indicating it has been turned off.
②	Left Joystick (Speed Adjustment)	Toggle the joystick upward, and the aircraft will ascend vertically; Toggle the joystick downward, and the aircraft will descend vertically; Toggle the joystick to the left, and the aircraft will rotate counterclockwise. Toggle the joystick to the right, and the aircraft will rotate clockwise. Press the left joystick vertically to switch speed.
③	Right Joystick (Ground-Air Mode Switch)	Toggle the joystick upward, and the aircraft will forward in level flight; Toggle the joystick downward, and the aircraft will backward in level flight; Toggle the joystick to the left, and the aircraft will turn right in level flight; Toggle the joystick to a certain diagonal, and the aircraft will fly towards the diagonal accordingly. Press the joystick vertically to switch from Air Mode to Ground Mode.
④	Fine-tuning Reset/ Enter or Exit Fine-tuning	Short press this button until the remote controller beeps, indicating the fine-tuning has all been reset. Press and hold this button and toggle the right joystick to enter fine-tuning mode; release this button, and the aircraft will exit fine-tuning mode. Please refer to page 12 for more details.
⑤	Headless Mode	Short press this button to enter or exit Headless Mode. Please refer to page 13 for more details.
⑥	One Key Take Off or Landing/ Emergency Stop	If the aircraft is in a static state of pairing, short press this button, and it will take off and ascend in place. If the aircraft is in flight, short press this button, and it will land in place. When in an emergency situation, long press this button, and all of the motors will stop running (please use it with caution). Please refer to page 15 for more details.

Pre-flight Preparation

Please ensure you have been properly trained or practiced (under the guidance of experts) before operating the aircraft. And select appropriate environment for your flight.

Battery Installation for the Aircraft

First, please identify the installation direction of the battery. Open the pressure plate above the battery with one hand, and tilt the battery into the battery compartment with the other hand, as shown in the figure. After installation, the battery pressure plate will rebound automatically.

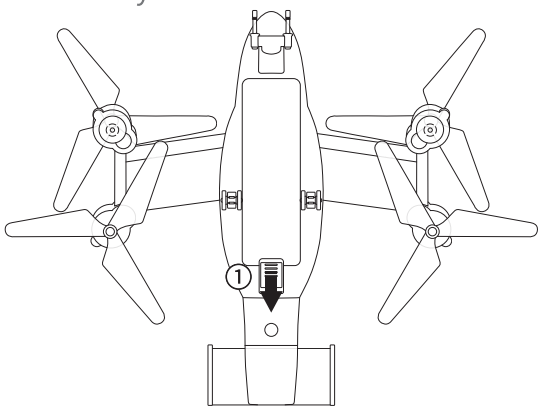

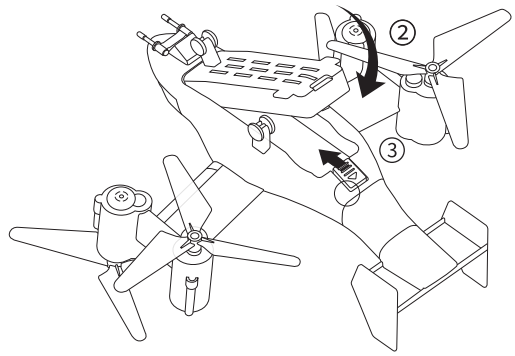

Battery Installation for the Remote Controller

Open the battery cover, and insert 3 AAA batteries (not included) with its two poles aligned correctly, as shown in Figure 2. After installment, please refit the battery cover.

①

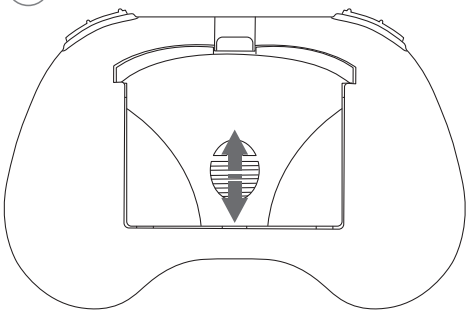

②

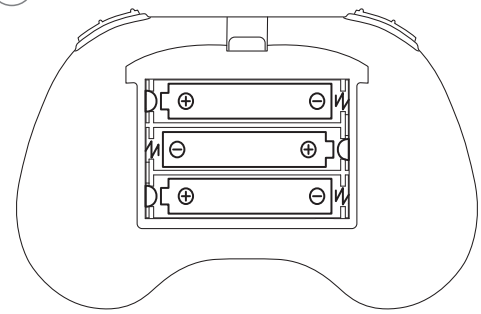

Flight Environment

(1)Please select open and spacious with no tall buildings surrounded as the site for the flight.
(2)Do not use the product in elements, such as strong winds (above level 4), heavy snow or rains or fogs.
(3)Please keep far away from obstructions, crowds, high-voltage wire, trees or water bodies, etc.
(4)Please do not use the product in places where electromagnet (such as communication base station, cell towers or high voltage station) is an influencing factor to avoid being interfered.

Pre-flight Inspection

Before the flight, please check:
(1)If the batteries for the aircraft and the remote controller have sufficient power.
(2)If the propellers are correctly installed without damage.
(3)If the propellers work well after the aircraft has been powered on.

Power On

Turn on the power of the aircraft and the remote controller, as shown in the picture.

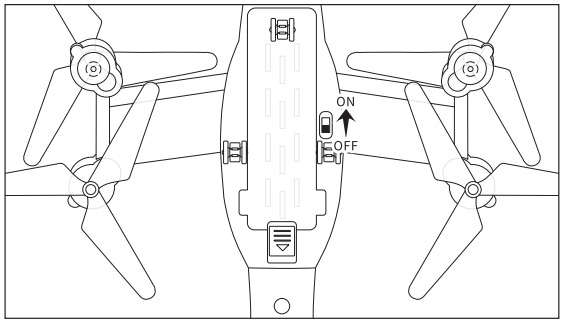

How to Turn on the Aircraft

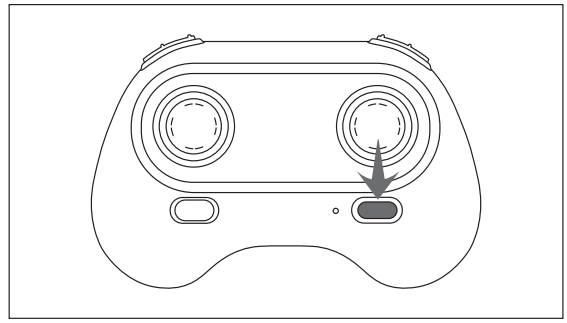

How to Turn on the Remote Controller

Pair the Remote Controller with the Aircraft

(1)Put the aircraft on the stable ground and ensure the front of the aircraft and the remote controller are faced towards the same direction as shown in the picture(except headless mode).
(2)Turn on the aircraft and then the remote controller.
(3)Toggle the left joystick towards the highest position and then the lowest position, and the aircraft' s indictor will turn from blinking to solid with the remote controller beeping twice, indicating the pairing has been successful.

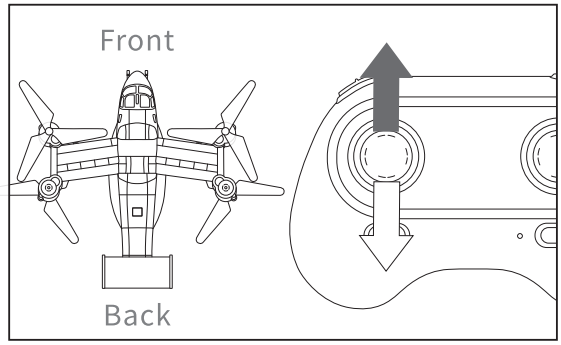

If it fails to pair after a long period of time, please turn off the aircraft and remote controller first and repeat the steps above.

Basic Operations

After pairing, please follow the 2 steps as below before starting the motor.

1. Calibrate the Headless Mode

As shown in Pic 1, toggle the left and right joysticks towards lower left corner, and the aircraft' s indicator will blink slowly, indicating the calibration has been successful.Please refer to "Headless Mode" section in "Advanced Operations" for more details.

2. Calibrate the Gyro

Put the aircraft on the level ground or surface to start with, which helps the aircraft succeed to take off. If placed on uneven or even rough surface or ground during the process of calibration, the aircraft may yaw to certain direction, which cannot be fine-tuned, after takeoff. And this may result in damage to the motor or control loss.As shown in Pic 2, toggle the two joysticks towards lower right corner, and the aircraft' s indicator will blink quickly, indicating the calibration has been successful.

Notes: If the aircraft collapses or falls to a great extent, the gyro may be out of control, thus producing impact on the actual flight. If the above happens, please re-calibrate the gyro.

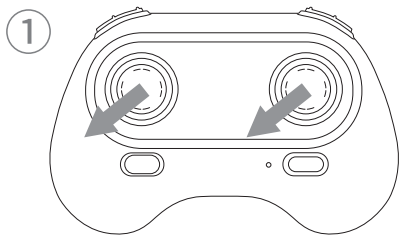

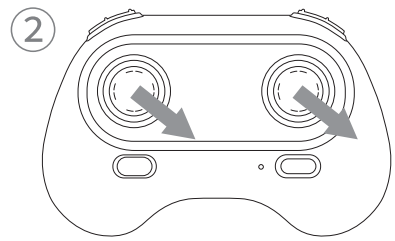

Remote Controller	Aircraft	How to
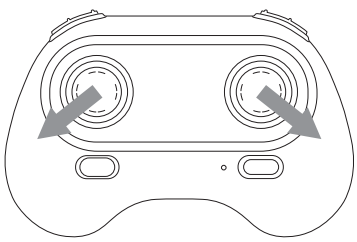	Turn on 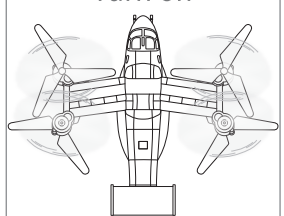	Turn on the Motor Toggle the joystick as shown in the picture and hold for 1 to 2 seconds to start the motor. Once the motor has been powered on, release the joystick and toggle the left and right joysticks to control the flight.
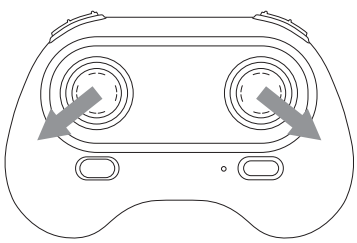	Turn off 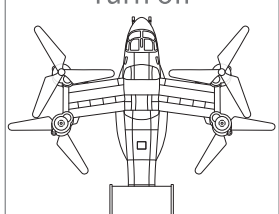	Turn off the Motor Only allow for this operation when the aircraft descends on the ground or other sites. Hold it for 1 to 2 seconds to turn off the motor. When the motor has been powered off, the aircraft will have no response even though you toggle the throttle joystick. Turn on the motor again for your next flight.

Notes: When you see the propellers come to stop, there is a chance that the left joystick has not been toggled instead that the motor has been powered off. So not until you confirm the motor has been powered off, please do not get close to the aircraft or use your hands to touch the motor, otherwise it may result in injuries.

Remote Controller	Aircraft	How to
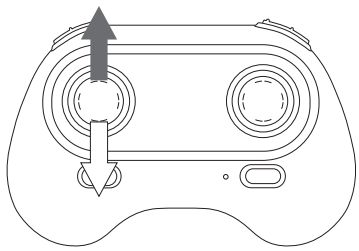	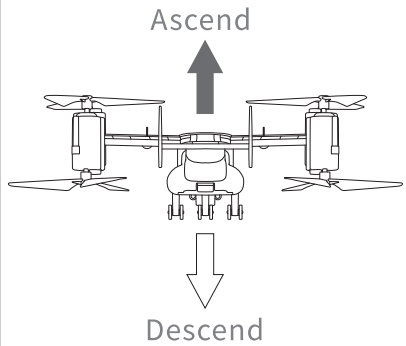	Toggle the left joystick upward, and the aircraft will ascend vertically. Toggle the left joystick downward, and the aircraft will descend vertically.
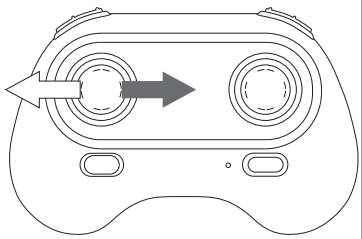	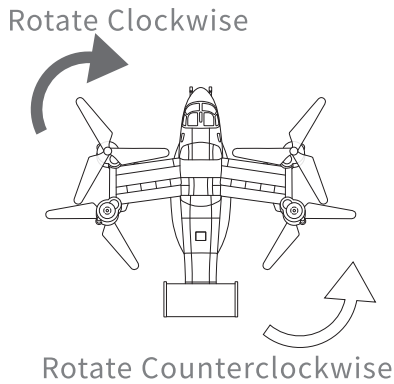	Toggle the left joystick to the right, and the aircraft will rotate clockwise. Toggle the left joystick to the left, and the aircraft will rotate counterclockwise.
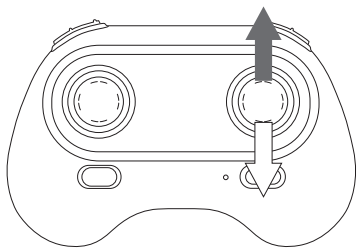	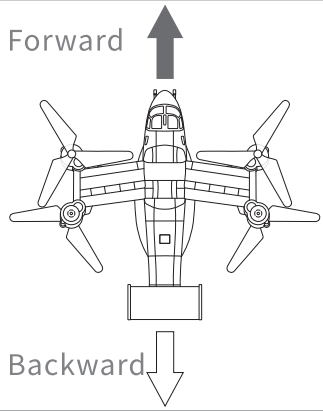	Toggle the right joystick upward, and the aircraft will finalize level forward flight. Toggle the right joystick downward, and the aircraft will finalize level backward flight.
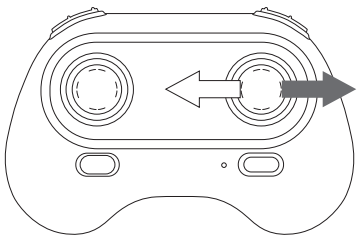	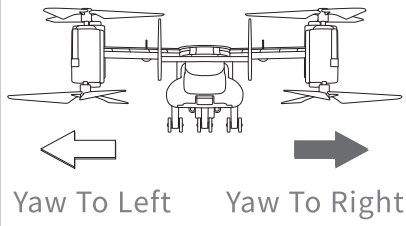	Toggle the right joystick to the right, and the aircraft will yaw to right. Toggle the right joystick to the left, and the aircraft will yaw to left.

Fine-tuning

Remote Controller	Before Correction	After Correction	Control Methods
			Step ①: If the aircraft deviates to the right automatically when hovering, please press and hold the No.4 button of the remote controller to enter fine-tuning mode, Step ②: Toggle the right joystick to the left to trim its direction to the left. If have corrected the aircraft but it still the deviates, please toggle the joystick for several times until it hovers stably. Then release the No.4 button to exit fine-tuning mode.
			Step ①: If the aircraft deviates to the left automatically when hovering, please press and hold the No.4 button of the remote controller to enter fine-tuning mode, Step ②: Toggle the right joystick to the right to trim its direction to the right. If have corrected the aircraft but it still the deviates, please toggle the joystick for several times until it hovers stably. Then release the No.4 button to exit fine-tuning mode.
			Step ①: If the aircraft deviates to the backward automatically when hovering, please press and hold the No.4 button of the remote controller to enter fine-tuning mode, Step ②: Toggle the right joystick upward to trim its direction to the front. If have corrected the aircraft but it still the deviates, please toggle the joystick for several times until it hovers stably. Then release the No.4 button to exit fine-tuning mode.
			Step ①: If the aircraft deviates to the forward automatically when hovering, please press and hold the No.4 button of the remote controller to enter fine-tuning mode, Step ②: Toggle the right joystick downward to trim its direction to the back. If have corrected the aircraft but it still the deviates, please toggle the joystick for several times until it hovers stably. Then release the No.4 button to exit fine-tuning mode.

To clear all the fine-tuning settings, please exit the fine-tuning mode and long press the No.4 button of the remote controller until the remote controller delivers a long beeping sound and the aircraft' s indicator lights blink twice before turning solid, indicating the process has been successful.

Advanced Operations

Speed Switch

Press down the left joystick to switch the speeds with low and high modes available.

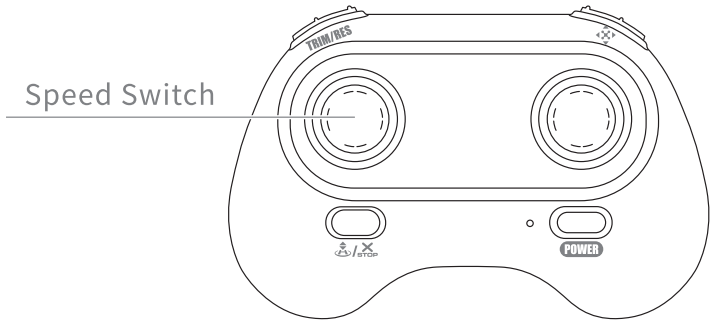

The remote controller beeps once at low speed and beeps twice at high speed.
Notes: Low speed mode will be activated by default each time you turn off the aircraft and the remote controller and then turn on.

Headless Mode

Calibrate the Headless Mode: After pairing, press “Calibrate the Headless Mode” on the remote controller, and the aircraft’ s front (the side facing the camera) is your front with other directions including back, left and right are relative to your direction.

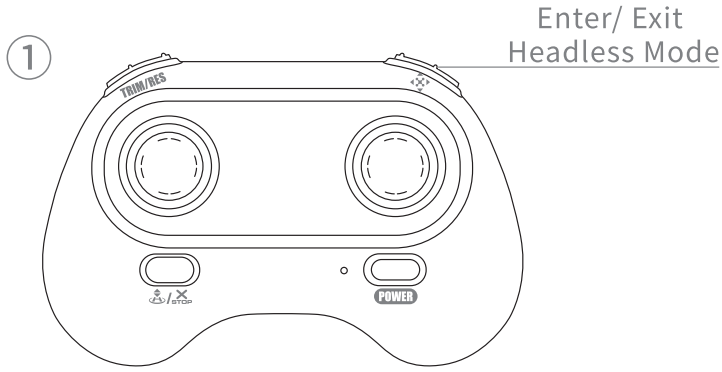

Enter Headless Mode: Long press the NO. 5 button, and the aircraft' s indicator turns from solid to blinking, indicating it has entered headless mode. Long press again, and the aircraft' s indicator turns back to solid on, indicating it has exited headless mode. In Headless Mode, when you toggle the right joystick upward, the aircraft will fly forward regardless of where it is positioned. And when you toggle the right joystick downward, the aircraft will fly backward, and so on.

Examples: When the aircraft is placed as indicated in Pic 2 after pairing, you can calibrate the Headless Mode, and the aircraft will fly forward with the direction the arrow indicates being its front.

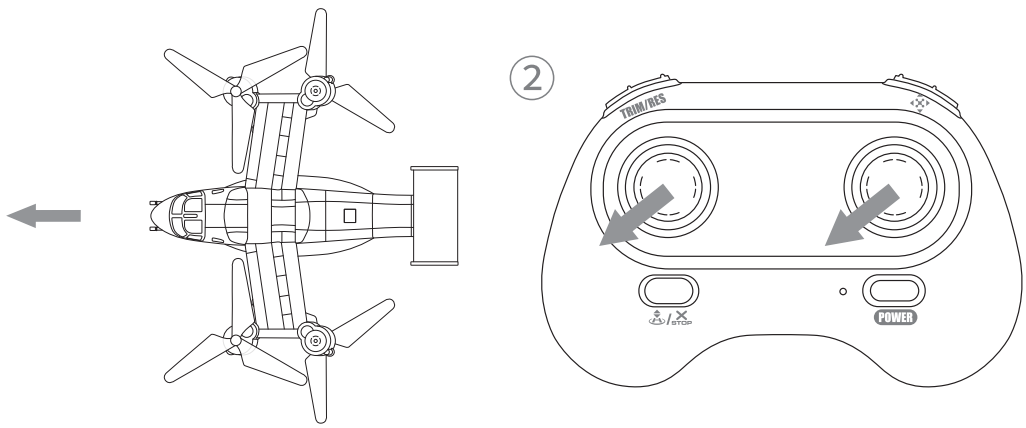

Please activate Headless Mode when the aircraft:
Flies as indicated in Pic 1 by toggling the right joystick upward to let the aircraft flies along the direction the arrow indicates.
Flies as indicated in Pic 2 by toggling the right joystick downward to let the aircraft flies along the direction the arrow indicates.
Flies as indicated in Pic 3 by toggling the right joystick to the left to let the aircraft flies along the direction the arrow indicates.
Flies as indicated in Pic 3 by toggling the right joystick to the right to let the aircraft flies along the direction the arrow indicates.
Notes: This feature helps beginners to recognize the orientations of the aircraft and control it to return back.

①	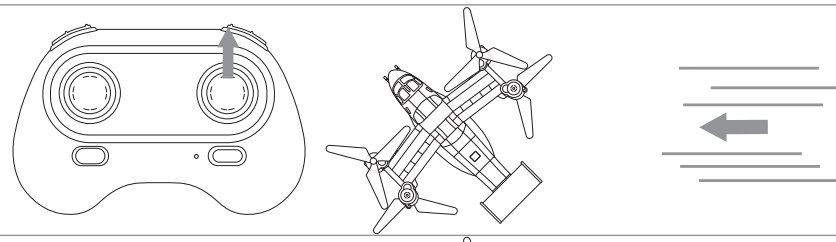
②	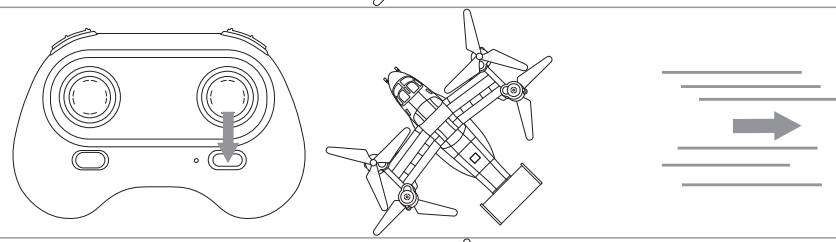
③	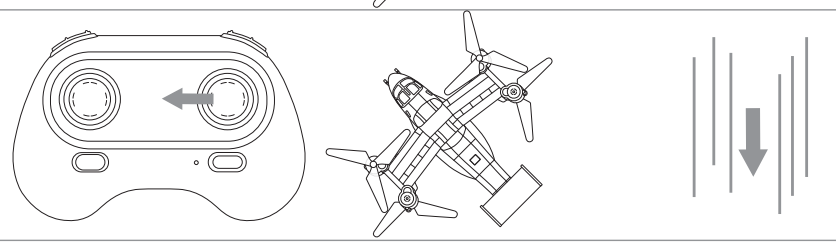
④	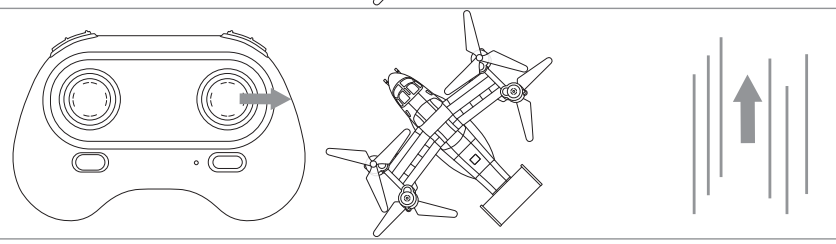

Control Loss Protection

Control loss protection will be triggered when the aircraft loses control signal and starts to descend slowly and vertically in places where it loses control signal. This helps reduce the risks of getting lost or crashes.
The feature may be triggered when:
Remote controller is powered off at a sudden.
There are obstructions between the remote controller and the aircraft.
The remote control signal has been interfered by electromagnetic wave.
The flight distance goes beyond the effective signal transmission range due to wind force or inertia.

Emergency Stop

When the aircraft loses control or emergency situation happens (like being intertwined by the branches, wires or hairs), tightly press the No.6 button on the remote controller for 2 seconds to activate emergency stop.
When the aircraft is in the air and the emergency stop has been turned on, the aircraft will drop or even get destroyed and threaten the crowds, cattle or objects underneath. So please be cautious when you activate this function.
Alternatively, you can toggle the left joystick downward for 2 seconds to finalize regular descent.

Troubleshooting

1. If it fails to take off, please:

① Check if you have turned on the aircraft and the remote controller.
② Check if the batteries for the aircraft and the remote controller have sufficient power. And If the batteries are of low voltage due to long-time suspension. If so, please recharge the battery for the aircraft and replace the battery for the remote controller.
③ Turn off the aircraft and the remote controller and then turn on before pairing again.

2. If the aircraft vibrates, please:

① Check if the propellers are broken or out of shape. If so, please replace them.
② Check if the protective guards are fixedly installed or out of shape, which results in imbalance of the aircraft or the friction between the propeller contacts against the protective guard.
③ If you have detached the aircraft, please check if the screws are properly fixed.

3. If the aircraft always yaws to one direction, please:

① Fine-tune the direction with the fine-tuning function.
② Put the aircraft on the level surface or ground and proceed “Calibrate the Gyro” again before next flight.

Aircraft and Display Stand Assembly

(only if the display stand is purchased)

Install the battery correctly on the bottom of the aircraft, and the connection point with the display bracket is on the battery module as shown in Figure 1, buckle it on the bump on the upper end of the display bracket, and rotate it to the display angle you personally think is appropriate.

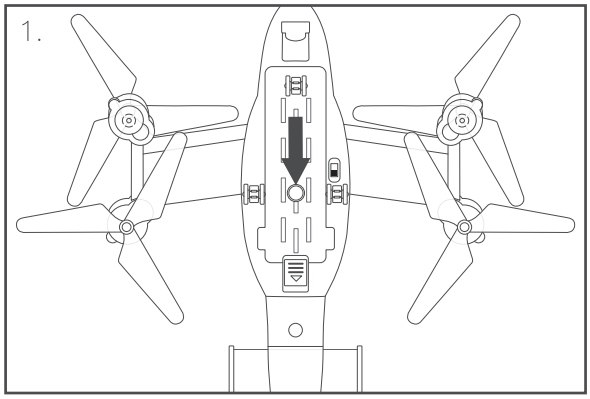

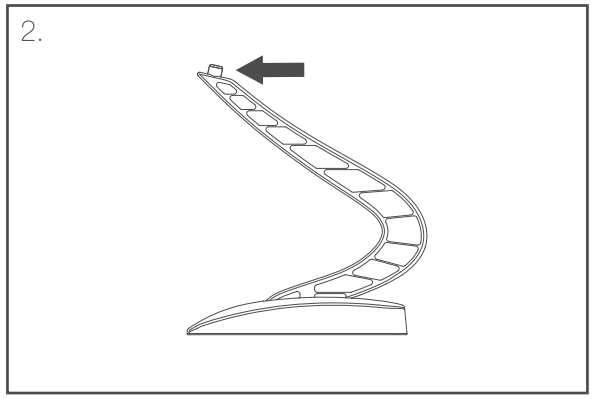

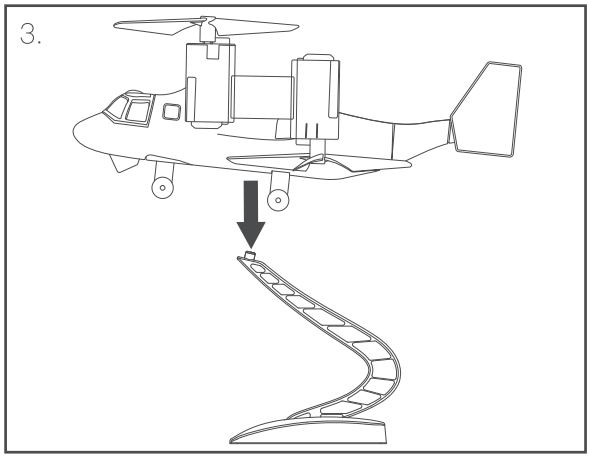

Install the Mobile Phone Holder of the FPV Version

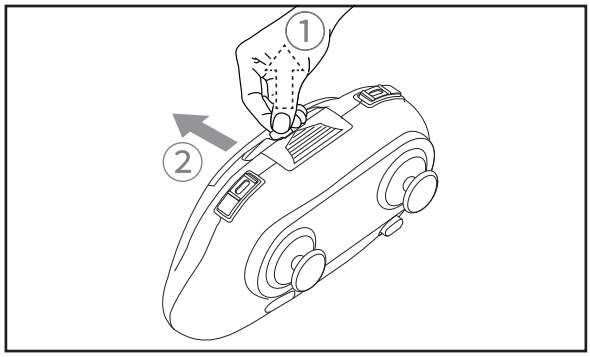

1. Pull out the blocking block of the mobile phone holder: pinch the end of the blocking block with two fingers, first lift it up, and then pull it out.

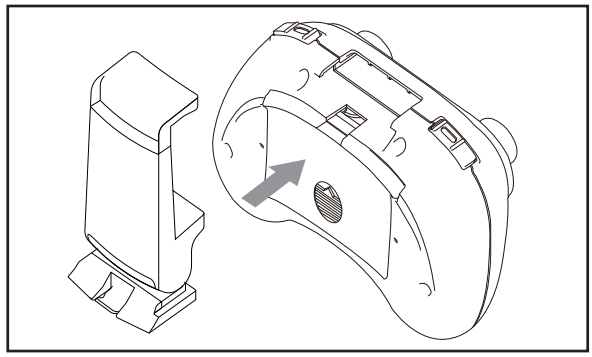

2. Insert the base of the mobile phone holder from the rear, taking care not to put the mobile phone clip upside down.

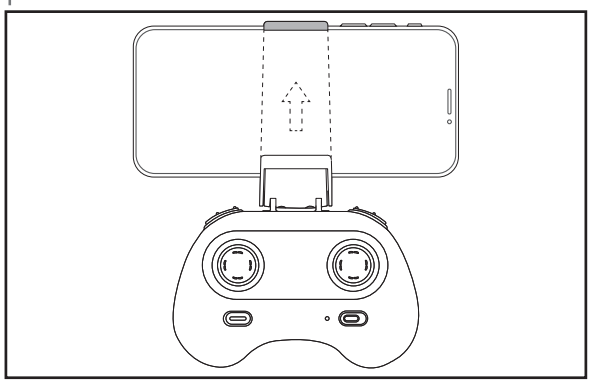

3. Pull up the mobile phone clamp spring, put on the mobile phone to ensure that the mobile phone is clamped.

Camera and Mobile Phone Connection of the FPV Version

When the remote control and the aircraft have been linked, the aircraft can only be controlled by the remote control. The APP can be used to watch real-time aerial pictures. When the remote control is not linked to the aircraft, you can use the APP to link the aircraft with The aircraft is controlled by the APP.

1.Please scan the QR code of the APP with your mobile phone to download the dedicated APP.

KY FPV

iOS

Android

2.After the APP download is complete, first turn on the aircraft power, then open the mobile WIFI directory, wait for the aircraft WIFI hotspot, the WIFI hotspot name is “LM19_FPV_XXXXXX", select the connection, wait for the connection to be successful, exit the menu, and then click to enter the APP.

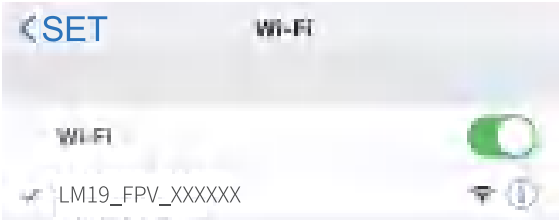

3. The first entry is the welcome page, click the “start button" to enter the control page, and then the real-time image transmission screen of your aircraft will be displayed on the phone screen.

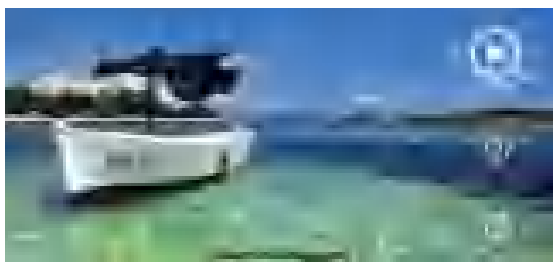

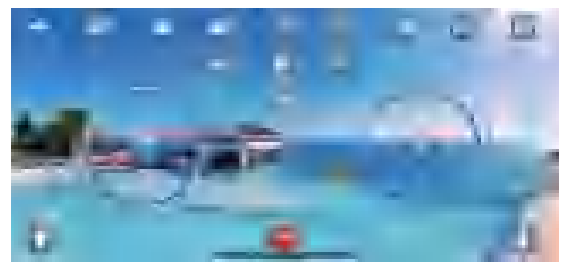

4. If you are connecting the remote control to the aircraft at this time, the APP is limited to viewing the image transmission screen.

5. If you need to use the APP to control the aircraft, please make sure that the remote control is turned off, first turn on the Altitude Hold Mode button (yellow means on), and then click the OFF button on the screen. At this time, it will switch to the “ON" state, indicating the aircraft The light will change from flashing to steady on, indicating that the APP and the aircraft are successfully linked. (APP control is limited to air mode)

6. The specific button functions are as follows, and the operation meaning of the buttons can be found in the product function introduction.

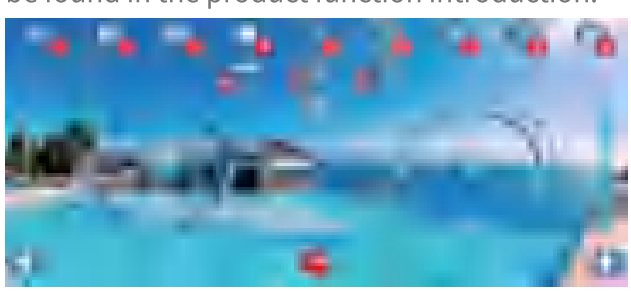

Key Description

1	Back	7	Gravity Sensor Mode
2	Take Photos	8	Linking
3	Shoot Videos	9	More Options
4	Menu	10	Revolve Lens
5	Speed Adjustment	11	Calibrate the Gyro
6	Altitude Hold Mode	12	Headless Mode

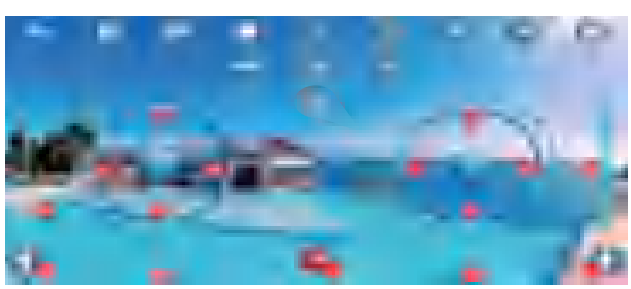

(Functions 10, 11, 12, 15 are hidden in button 9.)

14	Emergency Stop	22/23	Forward/Backward
15	Manual Focus	24/25	Yaw To Left/ Yaw To Right
16	One Key Take Off		
17	One Key Landing	26	Rotate Trimming
18/19	Ascend/Descend	27	Leftward/Rightward Trimming
20/21	Rotate Counterclockwise /Rotate Clockwise	28	Forward/Backward Trimming

NOTE: This equipment has been tested and found to comply with the limits for a
Class B digital device, pursuant to part 15 of the FCC Rules. These limits are
designed to provide reasonable protection against harmful interference in a
residential installation. This equipment generates uses and can radiate radio
frequency energy and, if not installed and used in accordance with the instructions,
may cause harmful interference to radio communications. However, there is no
guarantee that interference will not occur in a particular installation. If this
equipment does cause harmful interference to radio or television reception, which
can be determined by turning the equipment off and on, the user is encouraged to
try to correct the interference by one or more of the following measures:

- Reorient or relocate the receiving antenna.
- Increase the separation between the equipment and receiver.
-Connect the equipment into an outlet on a circuit different from that to which the
receiver is connected.
-Consult the dealer or an experienced radio/TV technician for help

Changes or modifications not expressly approved by the party responsible for compliance could
void the user's authority to operate the equipment.

This device complies with Part 15 of the FCC Rules. Operation is subject to the following two conditions:
(1) this device may not cause harmful interference, and
(2) this device must accept any interference received, including interference that may cause
undesired operation.