MEASUREMENT REPORT

FCC PART15.255

FCC ID:	2ARPAJW-WGA6001
APPLICANT:	Shenzhen Jaguar Wave Technology LTD.
Application Type:	Certification
Product:	Wireless Gigabit Adapter
Model No.:	JW-WGA6001
Brand Name:	JAGUAR WAVE, SUGAR Lady
FCC Classification:	Part 15 Low Power Transceiver, Rx Verified (DXT)
FCC Rule Part(s):	FCC PART15.255
Test Procedure(s):	ANSI C63.10-2013
Test Date:	November 08 ~ 21, 2018

Reviewed By: Sunny Sun
(Sunny Sun)

Approved By: Robin Wu
(Robin Wu)

ACCREDITED
TESTING LABORATORY
CERTIFICATE #3628.01

The test results relate only to the samples tested.
This equipment has been shown to be capable of compliance with the applicable technical standards as indicated in the measurement report and was tested in accordance with the measurement procedures specified in ANSI C63.10-2013. Test results reported herein relate only to the item(s) tested.
The test report shall not be reproduced except in full without the written approval of MRT Technology (Suzhou) Co., Ltd.

Revision History

Report No.	Version	Description	Issue Date	Note
1810RSU034-U1	Rev. 01	Initial Report	11-25-2018	Valid

CONTENTS

Description Page

1. INTRODUCTION 6

1.1. Scope 6
1.2. MRT Test Location 6

2. PRODUCT INFORMATION 7

2.1. Equipment Description 7
2.2. Test Mode 7
2.3. Operation Frequency and Channel List 7
2.4. Description of Test Software 7
2.5. Test Configuration 8
2.6. EMI Suppression Device(s)/Modifications 8
2.7. Labeling Requirements 8

3. DESCRIPTION of TEST 9

3.1. Evaluation Procedure 9
3.2. AC Line Conducted Emissions 9
3.3. Radiated Emissions 10

4. ANTENNA REQUIREMENTS 11

5. TEST EQUIPMENT CALIBRATION DATA 12

6. MEASUREMENT UNCERTAINTY 14

7. TEST RESULT 15

7.1. Summary 15
7.2. 6dB Occupied Bandwidth 16
7.2.1. Test Limit 16
7.2.2. Test Procedure used 16
7.2.3. Test Setting 16
7.2.4. Test Setup 16
7.2.5. Test Result 17
7.3. EIRP Power 18
7.3.1. Test Limit 18
7.3.2. Test Procedure used 18
7.3.3. Test Setting 18
7.3.4. Test Setup 19
7.3.5. Test Results 20

7.4. Conducted Output Power 22
7.4.1. Test Limit 22
7.4.2. Test Procedure used 22
7.4.3. Test Procedure 22
7.4.4. Test Setup 22
7.4.5. Test Result 23
7.5. Transmitter Spurious Emissions 24
7.5.1. Test Limit 24
7.5.2. Test Procedure used 24
7.5.3. Test Procedure 25
7.5.4. Test Setup 26
7.5.5. Test Result 29
7.6. Frequency Stability 34
7.6.1. Test Limit 34
7.6.2. Test Procedure used 34
7.6.3. Test Procedure 34
7.6.4. Test Setup 34
7.6.5. Test Result 35
7.7. Group Installation 36
7.7.1. Test Limit 36
7.7.2. Test Procedure used 36
7.7.3. Test Procedure 36
7.7.4. Test Setup 36
7.7.5. Test Result 36
7.8. AC Conducted Emissions Measurement 37
7.8.1. Test Limit 37
7.8.2. Test Setup 37
7.8.3. Test Result 38

8. CONCLUSION 40

Appendix A - Test Setup Photograph 41

Appendix B - EUT Photograph 42

§2.1033 General Information

Applicant:	Shenzhen Jaguar Wave Technology LTD.
Applicant Address:	Unit 1002/1003, Block 2A, Tongtai Times Center No.6259 Baoan Road, Fuhai Street, Baoan District, Shenzhen City, P.R.China.
Manufacturer:	Shenzhen Jaguar Wave Technology LTD.
Manufacturer Address:	Unit 1002/1003, Block 2A, Tongtai Times Center No.6259 Baoan Road, Fuhai Street, Baoan District, Shenzhen City, P.R.China.
Test Site:	MRT Technology (Suzhou) Co., Ltd
Test Site Address:	D8 Building, No.2 Tian'edang Rd., Wuzhong Economic Development Zone, Suzhou, China
FCC Registration No.:	893164
FCC designation No.:	CN1166
Test Device Serial No.:	N/A ☐ Production ☒ Pre-Production ☐ Engineering

Test Facility / Accreditations

Measurements were performed at MRT Laboratory located in Tian'edang Rd., Suzhou, China.

- **MRT facility is a FCC registered (MRT Reg. No. 893164) test facility with the site description report on file and has met all the requirements specified in ANSI C63.4-2014.**
- **MRT facility is an IC registered (MRT Reg. No. 11384A-1) test laboratory with the site description on file at Industry Canada.**
- **MRT facility is a VCCI registered (R-20025, G-20034, C-20020, T-20020) test laboratory with the site description on file at VCCI Council.**
- **MRT Lab is accredited to ISO 17025 by the American Association for Laboratory Accreditation (A2LA) under the American Association for Laboratory Accreditation Program (A2LA Cert. No. 3628.01) in EMC, Telecommunications, Radio and SAR testing.**

ilac-MRA A2LA

Accredited Laboratory

A2LA has accredited

MRT TECHNOLOGY (SUZHOU) CO., LTD.

Suzhou, Jiangsu, People's Republic of China

for technical competence in the field of

Electrical Testing

This laboratory is accredited in accordance with the recognized International Standard ISO/IEC 17025:2017 General requirements for the competence of testing and calibration laboratories. This accreditation demonstrates technical competence for a defined scope and the operation of a laboratory quality management system (refer to joint ISO-ILAC-IAF Communiqué dated April 2017).

Presented this 24th day of July 2018.

President and CEO
For the Accreditation Council
Certificate Number 3628.01
Valid to August 31, 2020

For the tests to which this accreditation applies, please refer to the laboratory's Electrical Scope of Accreditation.

1. INTRODUCTION

1.1. Scope

Measurement and determination of electromagnetic emissions (EMC) of radio frequency devices including intentional and/or unintentional radiators for compliance with the technical rules and regulations of the Federal Communications Commission and the Industry Canada Certification and Engineering Bureau.

1.2. MRT Test Location

The map below shows the location of the MRT LABORATORY, its proximity to the Taihu Lake. These measurement tests were conducted at the MRT Technology (Suzhou) Co., Ltd. Facility located at D8 Building, No.2 Tian'edang Rd., Wuzhong Economic Development Zone, Suzhou, China. The measurement facility compliant with the test site requirements specified in ANSI C63.4-2014.

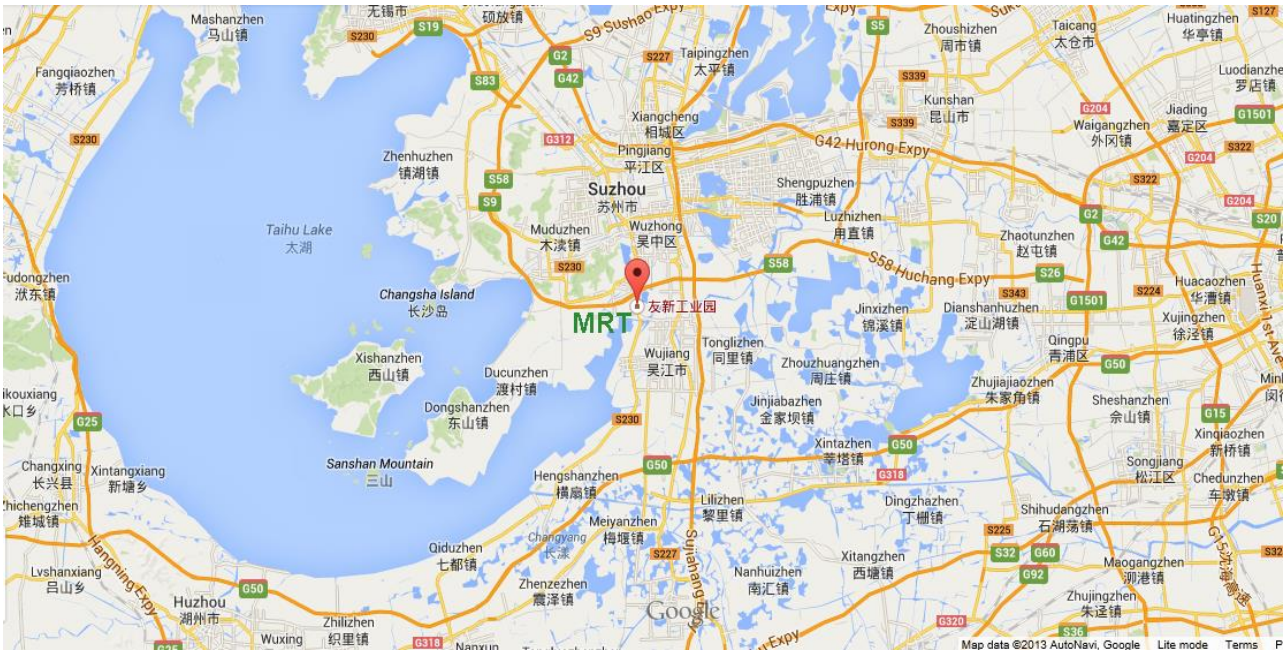

2. PRODUCT INFORMATION

2.1. Equipment Description

Product Name	Wireless Gigabit Adapter
Model No.	JW-WGA6001
Transmitting Frequency	58.32GHz ~ 64.80GHz
Channel Number	4
Modulation Type	16QAM
Antenna Type	Integrated antenna
Antenna Gain	1.0dBi

2.2. Test Mode

Test Mode	Mode 1: Transmit by 58.32GHz
	Mode 2: Transmit by 60.48GHz
	Mode 4: Transmit by 64.80GHz

2.3. Operation Frequency and Channel List

Channel	Frequency	Channel	Frequency
1	58.32 GHz	2	60.48 GHz
3	62.64 GHz	4	64.80 GHz

2.4. Description of Test Software

The test utility software used during testing was “Tera Term”, and the version was “4.74”

2.5. Test Configuration

The device was tested per the guidance of FCC Part 15.255 and ANSI 63.10-2013 was used to reference the appropriate EUT setup for radiated spurious emissions testing and AC line conducted testing.

2.6. EMI Suppression Device(s)/Modifications

No EMI suppression device(s) were added and/or no modifications were made during testing.

2.7. Labeling Requirements

Per 2.1074 & 15.19; Docket 95-19

The label shall be permanently affixed at a conspicuous location on the device; instruction manual or pamphlet supplied to the user and be readily visible to the purchaser at the time of purchase. However, when the device is so small wherein placement of the label with specified statement is not practical, only the FCC ID must be displayed on the device per Section 15.19(a)(5). Please see attachment for FCC ID label and label location.

3. DESCRIPTION of TEST

3.1. Evaluation Procedure

The measurement procedures described in the American National Standard for Testing Unlicensed Wireless Devices (ANSI C63.10-2013), and the requirement provided in FCC Part 15.255 were used in the measurement of the EUT.

Deviation from measurement procedure…….....None

3.2. AC Line Conducted Emissions

The line-conducted facility is located inside an 8'x4'x4' shielded enclosure. A 1m x 2m wooden table 80cm high is placed 40cm away from the vertical wall and 80cm away from the sidewall of the shielded room. Two 10kHz-30MHz, 50Ω/50uH Line-Impedance Stabilization Networks (LISNs) are bonded to the shielded room floor. Power to the LISNs is filtered by external high-current high-insertion loss power line filters. These filters attenuate ambient signal noise from entering the measurement lines. These filters are also bonded to the shielded enclosure.

The EUT is powered from one LISN and the support equipment is powered from the second LISN. All interconnecting cables more than 1 meter were shortened to a 1 meter length by non-inductive bundling (serpentine fashion) and draped over the back edge of the test table. All cables were at least 40cm above the horizontal reference ground-plane. Power cables for support equipment were routed down to the second LISN while ensuring that that cables were not draped over the second LISN.

Sufficient time for the EUT, support equipment, and test equipment was allowed in order for them to warm up to their normal operating condition. The RF output of the LISN was connected to the receiver and exploratory measurements were made to determine the frequencies producing the maximum emission from the EUT. The receiver was scanned from 150kHz to 30MHz. The detector function was set to peak mode for exploratory measurements while the bandwidth of the analyzer was set to 9kHz. The EUT, support equipment, and interconnecting cables were arranged and manipulated to maximize each emission. Each emission was also maximized by varying: power lines, the mode of operation or data exchange speed, or support equipment whichever determined the worst-case emission. Once the worst case emissions have been identified, the one EUT cable configuration/arrangement and mode of operation that produced these emissions are used for final measurements on the same test site. The analyzer is set to CISPR quasi-peak and average detectors with a 9kHz resolution bandwidth for final measurements.

An extension cord was used to connect to a single LISN which powered by EUT. The extension cord was calibrated with LISN, the impedance and insertion loss are compliance with the requirements as stated in ANSI C63.10-2013.

3.3. Radiated Emissions

The radiated test facilities consisted of an indoor 3 meter semi-anechoic chamber used for final measurements and exploratory measurements, when necessary. The measurement area is contained within the semi-anechoic chamber which is shielded from any ambient interference. For measurements above 1GHz absorbers are arranged on the floor between the turn table and the antenna mast in such a way so as to maximize the reduction of reflections. For measurements below 1GHz, the absorbers are removed. A MF Model 210SS turntable is used for radiated measurement. It is a continuously rotatable, remote controlled, metallic turntable and 2 meters (6.56 ft.) in diameter. The turn table is flush with the raised floor of the chamber in order to maintain its function as a ground plane. An 80cm high PVC support structure is placed on top of the turntable.

For all measurements, the spectrum was scanned through all EUT azimuths and from 1 to 4 meter receive antenna height using a broadband antenna from 30MHz up to the upper frequency shown in 15.33(b)(1) depending on the highest frequency generated or used in the device or on which the device operates or tunes. For frequencies above 1GHz, linearly polarized double ridge horn antennas were used. For frequencies below 30MHz, a calibrated loop antenna was used. When exploratory measurements were necessary, they were performed at 1 meter test distance inside the semi-anechoic chamber using broadband antennas, broadband amplifiers, and spectrum analyzers to determine the frequencies and modes producing the maximum emissions. Sufficient time for the EUT, support equipment, and test equipment was allowed in order for them to warm up to their normal operating condition. The test set-up for frequencies below 1GHz was placed on top of the 0.8 meter high, 1 x 1.5 meter table; and test set-up for frequencies 1-40GHz was placed on top of the 1.5 meter high, 1 x 1.5 meter table. The EUT, support equipment, and interconnecting cables were arranged and manipulated to maximize each emission. Appropriate precaution was taken to ensure that all emissions from the EUT were maximized and investigated. The system configuration, clock speed, mode of operation or video resolution, if applicable, turntable azimuth, and receive antenna height was noted for each frequency found.

Final measurements were made in the semi-anechoic chamber using calibrated, linearly polarized broadband and horn antennas. The test setup was configured to the setup that produced the worst case emissions. The spectrum analyzer was set to investigate all frequencies required for testing to compare the highest radiated disturbances with respect to the specified limits. The turntable containing the EUT was rotated through 360 degrees and the height of the receive antenna was varied 1 to 4 meters and stopped at the azimuth and height producing the maximum emission. Each emission was maximized by changing the orientation of the EUT through three orthogonal planes and changing the polarity of the receive antenna, whichever produced the worst-case emissions. According to 3dB Beam-Width of horn antenna, the horn antenna should be always directed to the EUT when rising height.

4. ANTENNA REQUIREMENTS

Excerpt from §15.203 of the FCC Rules/Regulations:

"An intentional radiator antenna shall be designed to ensure that no antenna other than that furnished by the responsible party can be used with the device. The use of a permanently attached antenna or of an antenna that uses a unique coupling to the intentional radiator shall be considered sufficient to comply with the provisions of this section."

- The antenna of the **Wireless Gigabit Adapter** is **permanently attached.**
- There are no provisions for connection to an external antenna.

Conclusion:

The unit complies with the requirement of §15.203.

5. TEST EQUIPMENT CALIBRATION DATA

Radiated Emission - AC1

Instrument	Manufacturer	Type No.	Asset No.	Cali. Interval	Cali. Due Date
EMI Test Receiver	R&S	ESR7	MRTSUE06001	1 year	2019/08/14
Signal Analyzer	R&S	FSV40	MRTSUE06218	1 year	2019/04/20
EXA Signal Analyzer	Keysight	N9010B	MRTSUE06452	1 year	2019/07/20
Loop Antenna	Schwarzbeck	FMZB 1519	MRTSUE06025	1 year	2018/11/20
Bilog Period Antenna	Schwarzbeck	VULB 9168	MRTSUE06172	1 year	2019/04/12
Broad-Band Horn Antenna	Schwarzbeck	BBHA9120D	MRTSUE06023	1 year	2019/10/20
Broad Band Horn Antenna	Schwarzbeck	BBHA 9170	MRTSUE06024	1 year	2018/12/14
Micro-Wave Antenna	MI-WWAVE	261U-25	MRTSUE06273	N/A	N/A
Micro-Wave Antenna	MI-WWAVE	261E-25	MRTSUE06276	N/A	N/A
Micro-Wave Antenna	MI-WWAVE	261F-25	MRTSUE06275	N/A	N/A
Micro-Wave Antenna	MI-WWAVE	261G	MRTSUE06274	N/A	N/A
RF Signal Generator	Keysight	E8257D	MRTSUE06453	N/A	N/A
Millimeter wave signal source frequency expander	Keysight	E8257DV15	MRTSUE06456	N/A	N/A
Millimeter wave signal source frequency expander	Keysight	E8257DV10	MRTSUE06458	N/A	N/A
USB wideband power sensor	Keysight	U8489A	MRTSUE06448	1 year	2019/07/24
Standard Gain Horn Antenna	A-INFOMW	LB-10-25-A	MRTSUE06410	N/A	N/A
Standard Gain Horn Antenna	A-INFOMW	LB-15-25-A	MRTSUE06409	N/A	N/A
Waveguide Harmonic Mixer	Keysight	M1970V	MRTSUE06271	N/A	N/A
Waveguide Harmonic Mixer	Keysight	M1970W	MRTSUE06272	N/A	N/A
SA Extension Module	Keysight	N9029AV06	MRTSUE06368	N/A	N/A
SA Extension Module	Keysight	N9029AV05	MRTSUE06367	N/A	N/A
Oscilloscope	Agilent	DSO-X 6002A	MRTSUE06107	1 year	2019/04/20
RF Detector	SAGE	STD-15SF-NI	MRTSUE06466	N/A	N/A
Microwave System Amplifier	Agilent	83017A	MRTSUE06076	1 year	2018/11/17 2019/11/17
Hygrothermograph	Testo	608-H1	MRTSUE06403	1 year	2019/08/15
Anechoic Chamber	TDK	Chamber-AC1	MRTSUE06212	1 year	2019/05/02

Conducted Emissions - SR2

Instrument	Manufacturer	Type No.	Asset No.	Cali. Interval	Cali. Due Date
EMI Test Receiver	R&S	ESR3	MRTSUE06185	1 year	2019/04/20
Two-Line V-Network	R&S	ENV216	MRTSUE06002	1 year	2019/06/15
Two-Line V-Network	R&S	ENV216	MRTSUE06003	1 year	2019/06/15
Thermohygrometer	Testo	608-H1	MRTSUE06404	1 year	2019/08/14

Software	Version	Function
e3	v 8.3.5	EMI Test Software

6. MEASUREMENT UNCERTAINTY

Where relevant, the following test uncertainty levels have been estimated for tests performed on the EUT as specified in CISPR 16-4-2. This uncertainty represents an expanded uncertainty expressed at approximately the 95% confidence level using a coverage factor of k = 2.

Radiated Emission Measurement - AC1
Measuring Uncertainty for a Level of Confidence of 95% (U=2Uc(y)): 9kHz ~ 1GHz: 4.18dB 1GHz ~ 18GHz: 4.76dB
AC Conducted Emission Measurement - SR2
Measuring Uncertainty for a Level of Confidence of 95% (U=2Uc(y)): 150kHz~30MHz: ± 3.46dB

7. TEST RESULT

7.1. Summary

Company Name: **Shenzhen Jaguar Wave Technology LTD.**

FCC ID: **2ARPAJW-WGA6001**

FCC Part Section(s)	Test Description	Test Limit	Test Condition	Test Result	Reference
15.255(e)	6dB Occupied Bandwidth	N/A	Radiated	Pass	Section 7.2
15.255(c)	EIRP Power	Average Power < 40dBm Peak Power < 43dBm		Pass	Section 7.3
15.255(e)	Conducted Output Power	< 500mW		Pass	Section 7.4
15.255(d)	Transmitter Spurious Emissions	Refer to Section 7.4		Pass	Section 7.5
15.255(f)	Frequency stability	Within the frequency band 57-71GHz		Pass	Section 7.6
15.255(h)	Group Installation	Refer to Section 7.7	N/A	Pass	Section 7.7
15.207	AC Conducted Emissions 150kHz - 30MHz	< FCC 15.207 limits	Line Conducted	Pass	Section 7.8

Notes:

1. The radiation measurements are performed in X, Y, Z axis positioning. Only the worst case data is shown in the report.
2. The EUT is configured to operate at the Modulation and Coding Scheme index (MCS) giving the maximum output power (MCS 1) in this report. The assessment data are shown in section 7.3

7.2. 6dB Occupied Bandwidth

7.2.1. Test Limit

N/A

7.2.2. Test Procedure used

ANSI C63.10 Section 9.3

7.2.3. Test Setting

1. Span = approximately two times to three times the EBW, centered on the carrier frequency
2. RBW = 100kHz
3. VBW = 300kHz
4. Detector function = Peak
5. Sweep time = auto
6. Trace mode = max hold.
7. The EUT shall be transmitting at its maximum data rate. Allow the trace to stabilize.
8. Use the marker-to-peak function to set the marker to the peak of the emission. Use the marker-delta function to measure the specified dB down one side of the emission.
9. Reset the marker-delta function and move the marker to the other side of the emission until the delta marker amplitude is at the same level as the reference marker amplitude. The marker- delta frequency reading at this point is the specified emission bandwidth.

7.2.4. Test Setup

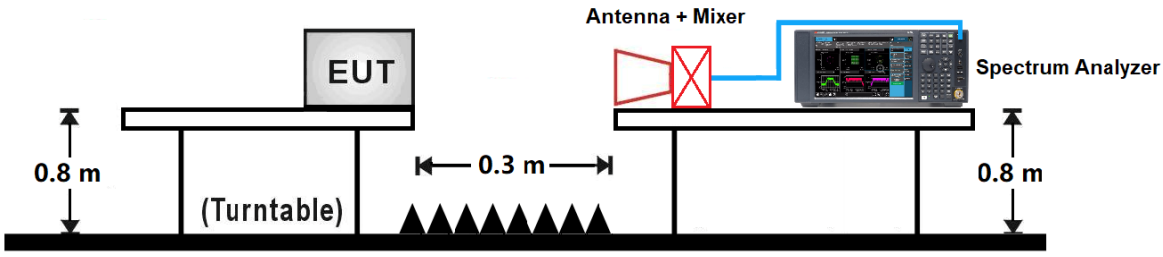

7.2.5. Test Result

Product	Wireless Gigabit Adapter	Temperature	24°C
Test Engineer	Vincent Yu	Relative Humidity	54%
Test Site	AC1	Test Date	2018/11/10

Channel No.	Frequency (GHz)	Date Rate	6dB Bandwidth (GHz)	Result
1	58.32	MCS 1	1.79	Pass
2	60.48	MCS 1	1.62	Pass
4	64.80	MCS 1	1.66	Pass

6dB Bandwidth

Channel 1 (58.32GHz)

Channel 2 (60.48GHz)

Channel 4 (64.80GHz)

7.3. EIRP Power

7.3.1.Test Limit

Within the 57-71 GHz band, emission levels shall not exceed the following equivalent isotropically radiated power (EIRP): the average power of any emission shall not exceed 40dBm and the peak power of any emission shall not exceed 43dBm.

7.3.2.Test Procedure used

ANSI C63.10 Section 9.11

Note: Far-field boundary calculation as below.

According to ANSI C63.10-2013, Clause 9, for mm-wave measurements, L >> λ and a more suitable formula for the far-field boundary distance: $R_{(Far\ Field)} = 2L^2/\lambda$

- L is the largest antenna dimension of the transmit antenna in m
- λ is the wavelength in m

Far-field boundary calculation				
Channel No.	Frequency (GHz)	λ (m)	L (m)	$R_{(Far\ Field)}$ (m)
1	58.32	0.0051	0.020	0.16
2	60.48	0.0050	0.020	0.16
3	62.64	0.0048	0.020	0.17
4	64.80	0.0046	0.020	0.17

Our measurement is performed at a minimum distance of 0.30m > $R_{(Far\ Field)}$

7.3.3.Test Setting

1. Connect the test antenna for the fundamental frequency band to the mm-wave RF detector. Place the test horn in the main beam of the EUT at 0.3m. Connect the video output of the detector to the 50Ω input of a DSO. Set the sampling rate of the DSO to at least twice the cutoff frequency of any LPF used or to at least twice the signal bandwidth without a LPF. Adjust the memory depth, the triggering, and the sweep speed to obtain a display that is representative of the signal considering the type of modulation.
2. Record the average and peak voltages from the DSO.
3. Replace the EUT with mm-wave source to the RF input port of the instrumentation system. The mm-wave source shall be unmodulated.
4. Adjust the frequency of the mm-wave source to the center of the frequency range occupied by the transmitter. Adjust the amplitude of the mm-wave source such that the DSO indicates a voltage

equal to the peak voltage recorded in step 2.

5. Without changing any settings, replace the DSO with the mm-wave power meter. Measure and note the power.

6. Repeat step 4 and step 5 for the average voltage recorded in step 2.

7.3.4.Test Setup

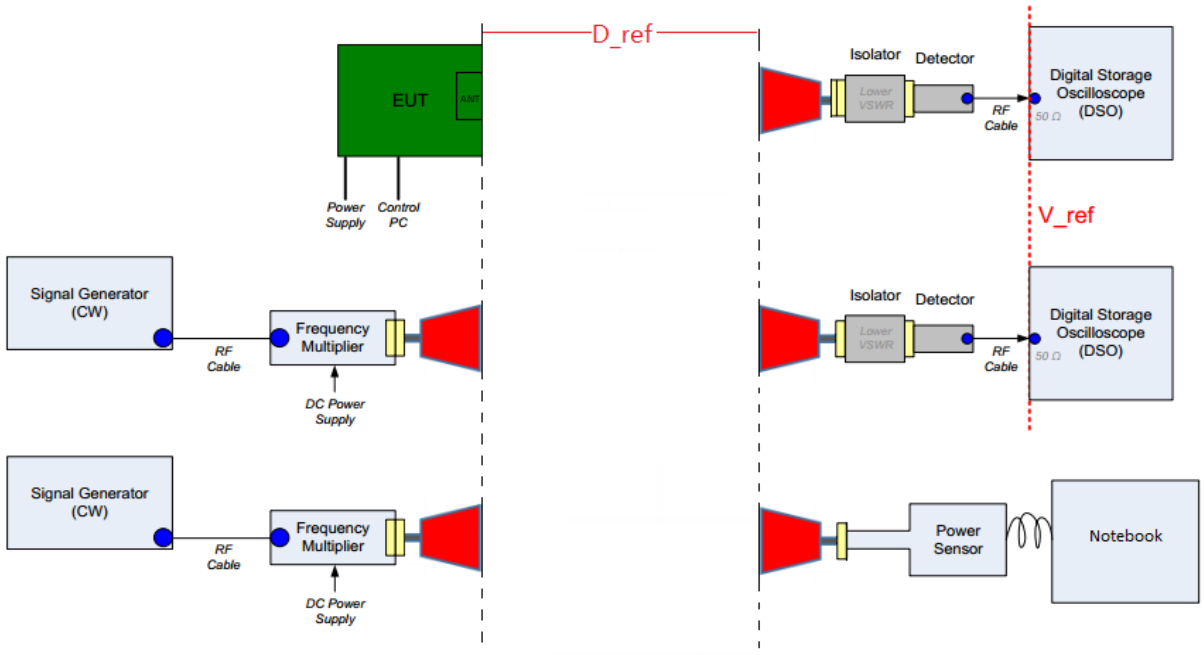

7.3.5.Test Results

Power output test was verified over all data rates, and then choose the maximum power output (Gray Marker) for final test of each channel.

Output power at various data rates for Channel 1 (58.32GHz):

Channel	Frequency (GHz)	Date Rate	Average EIRP (dBm)
1	58.32	MCS 0	N/A (Note)
		MCS 1	8.20
		MCS 2	8.18
		MCS 3	8.18
		MCS 4	8.17
		MCS 5	8.16
		MCS 6	7.52
		MCS 7	7.50
		MCS 8	7.22
		MCS 9	7.18
		MCS 10	6.23
		MCS 11	6.14
		MCS 12	6.08

Note: The EUT goes into carrier mode when it works at MCS0.

Product	Wireless Gigabit Adapter	Temperature	23°C
Test Engineer	Vincent Yu	Relative Humidity	54%
Test Site	AC1	Test Date	2018/11/19

Channel No.	Frequency (GHz)	Date Rate	D (m)	Measured Voltage (mV)	P_R (dBm)	G_R (dBi)	EIRP (W)	EIRP (dBm)	Limit (dBm)	Result
Peak EIRP										
1	58.32	MCS 1	0.30	-46.10	-22.47	24.49	0.0108	10.33	43	Pass
2	60.48	MCS 1	0.30	-72.08	-21.39	24.34	0.0154	11.88	43	Pass
4	64.80	MCS 1	0.30	-52.80	-25.13	24.79	0.0067	8.26	43	Pass
Average EIRP										
1	58.32	MCS 1	0.30	-21.58	-24.61	24.49	0.0066	8.20	40	Pass
2	60.48	MCS 1	0.30	-36.22	-23.50	24.34	0.0095	9.78	40	Pass
4	64.80	MCS 1	0.30	-25.27	-27.05	24.79	0.0043	6.33	40	Pass

Note:

The measured power level (P_R) is converted to EIRP using Friis equation:

$$EIRP\ (W) = P_T * G_T = (P_R / G_R) * (4 * Pi * D / \lambda)^2$$

- P_R is the equivalent power measured at the output of the test antenna, in W
- λ is the wavelength of the emission under investigation, in m
- G_R is the linear gain of the test antenna, $G_{R\ (Numeric)}$ = 10^(dBi / 10)
- D is the measurement distance, in m

7.4. Conducted Output Power

7.4.1.Test Limit

The peak transmitter conducted output power shall not exceed 500mW.

Transmitters with an emission bandwidth of less than 100 MHz must limit their peak transmitter conducted output power to the product of 500mW times their emission bandwidth divided by 100MHz. For the purposes of this paragraph, emission bandwidth is defined as the instantaneous frequency range occupied by a steady state radiated signal with modulation, outside which the radiated power spectral density never exceeds 6 dB below the maximum radiated power spectral density in the band, as measured with a 100 kHz resolution bandwidth spectrum analyzer.

7.4.2.Test Procedure used

ANSI C63.10 Section 9.11

7.4.3.Test Procedure

For peak measurements, calculate the peak conducted output power from the peak EIRP using below equation:

$$P_{cond} = EIRP_{Linear} / G_{EUT}$$

Where

P_{cond}	is the conducted output power, in W
$EIRP_{Linear}$	is the equivalent isotropically radiated power, in W
G_{EUT}	is numeric gain of the EUT radiating element (antenna)

7.4.4.Test Setup

N/A

7.4.5.Test Result

Product	Wireless Gigabit Adapter	Temperature	23°C
Test Engineer	Vincent Yu	Relative Humidity	54%
Test Site	AC1	Test Date	2018/11/19

Channel No.	Frequency (GHz)	Date Rate	Peak EIRP (dBm)	EUT Antenna Gain (dBi)	Output Power (dBm)	Output Power (mW)	Limit (mW)	Result
1	58.32	MCS 1	10.33	1.0	9.33	8.57	500	Pass
2	60.48	MCS 1	11.88	1.0	10.88	12.25	500	Pass
4	64.80	MCS 1	8.26	1.0	7.26	5.32	500	Pass

Note: The 6dB Bandwidth is greater than 100MHz, so the limit of the Output Power is 500mW.

7.5. Transmitter Spurious Emissions

7.5.1. Test Limit

Limits on spurious emissions:

1. Radiated emissions below 40 GHz shall not exceed the general limits in §15.209.
2. Between 40 GHz and 200 GHz, the level of these emissions shall not exceed 90pW/cm^2 at a distance of 3 meters.
3. The levels of the spurious emissions shall not exceed the level of the fundamental emission.

FCC Part 15.209 Limit		
Frequency (MHz)	Field Strength (uV/m)	Measurement Distance (m)
0.009 ~ 0.490	2400/F(kHz)	300
0.490 ~ 1.705	24000/F(kHz)	30
1.705 ~ 30.0	30	30
30 ~ 80	100**	3
80 ~ 216	150**	3
216 ~ 960	200**	3
Above 960	500	3
Note 1: The lower limit shall apply at the transition frequency. Note 2: Distance refers to the distance in meters between the measuring instrument antenna and the closed point of any part of the device or system. Note 3: E field strength (dBuV/m) = 20 log E field strength (uV/m).		

7.5.2. Test Procedure used

ANSI C63.10 Section 9.12 and Section 9.13

7.5.3.Test Procedure

Measurement of harmonic and spurious emissions above 40 GHz

1. Connect the test antenna covering the appropriate frequency range to a spectrum analyzer via an external mixer.
2. Set spectrum analyzer RBW = 1MHz, VBW = 3MHz, average detector.
3. Maximize all observed emissions. Note the maximum power indicated on the spectrum analyzer. Adjust this reading, if necessary, by the conversion loss of the external mixer used at the frequency under investigation and the external mixer IF cable loss.
4. Calculate the maximum field strength of the emission at the measurement distance
5. Calculate the power density at the distance specified by the limit from the field strength at the distance specified by the limit
6. Repeat the preceding sequence for every emission observed in the frequency band under investigation.

Measurement of harmonic and spurious emissions below 40 GHz

1. Analyzer center frequency was set to the frequency of the radiated spurious emission of interest
2. RBW = as specified in Table 1
3. VBW = 3MHz
4. Detector = peak
5. Sweep time = auto couple
6. Trace mode = max hold
7. Trace was allowed to stabilize

Table 1 - RBW as a function of frequency

Frequency	RBW
9 ~ 150 kHz	200 ~ 300 Hz
0.15 ~ 30 MHz	9 ~ 10 kHz
30 ~ 1000 MHz	100 ~ 120 kHz
> 1000 MHz	1 MHz

Average Field Strength Measurements

1. Analyzer center frequency was set to the frequency of the radiated spurious emission of interest
2. RBW = 1MHz
3. VBW ≥ 1/T
4. De As an alternative, the instrument may be set to linear detector mode. Ensure that video filtering is applied in linear voltage domain (rather than in a log or dB domain). Some instruments require linear display mode in order to accomplish this. Others have a setting for Average-VBW Type, which can be set to “Voltage” regardless of the display mode
5. Detector = Peak
6. Sweep time = auto
7. Trace mode = max hold
8. Allow max hold to run for at least 50 times (1/duty cycle) traces

7.5.4.Test Setup

<u>9kHz ~ 30MHz Test Setup:</u>

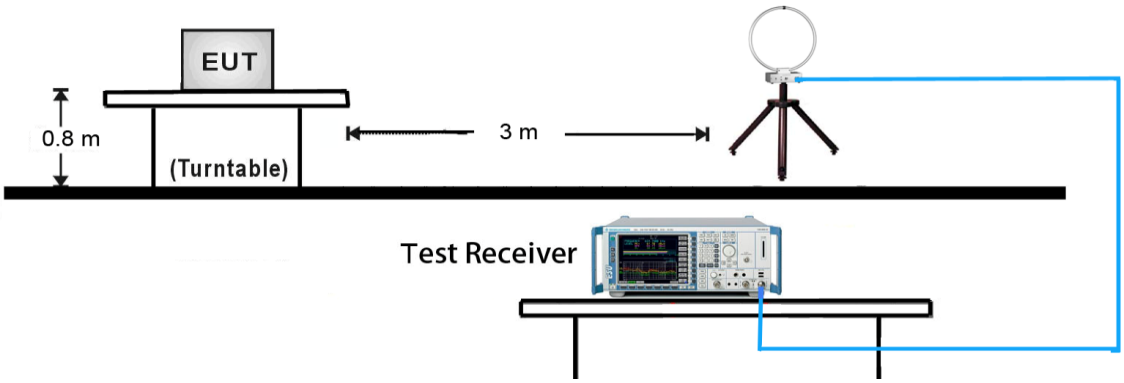

30MHz ~ 1GHz Test Setup:

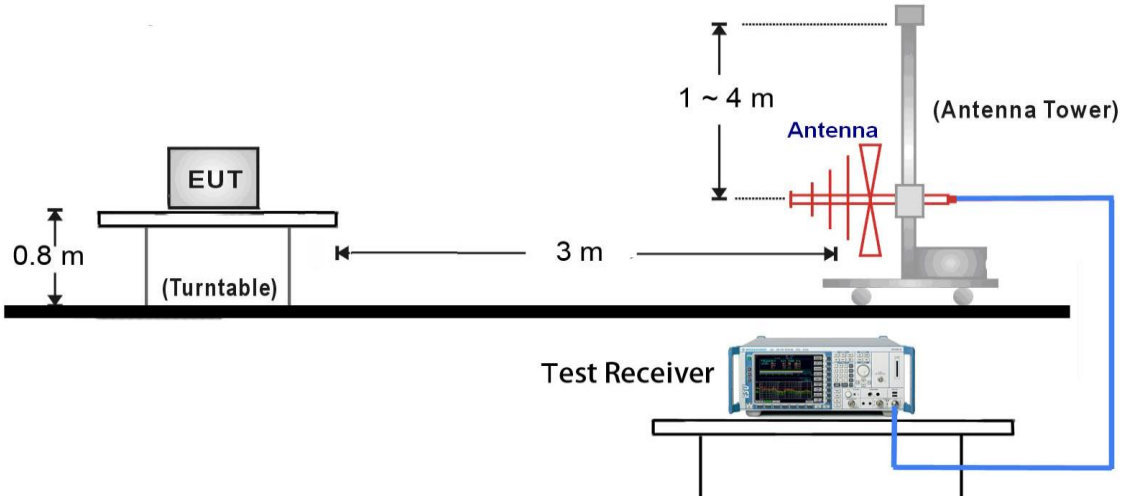

1GHz ~ 40GHz Test Setup:

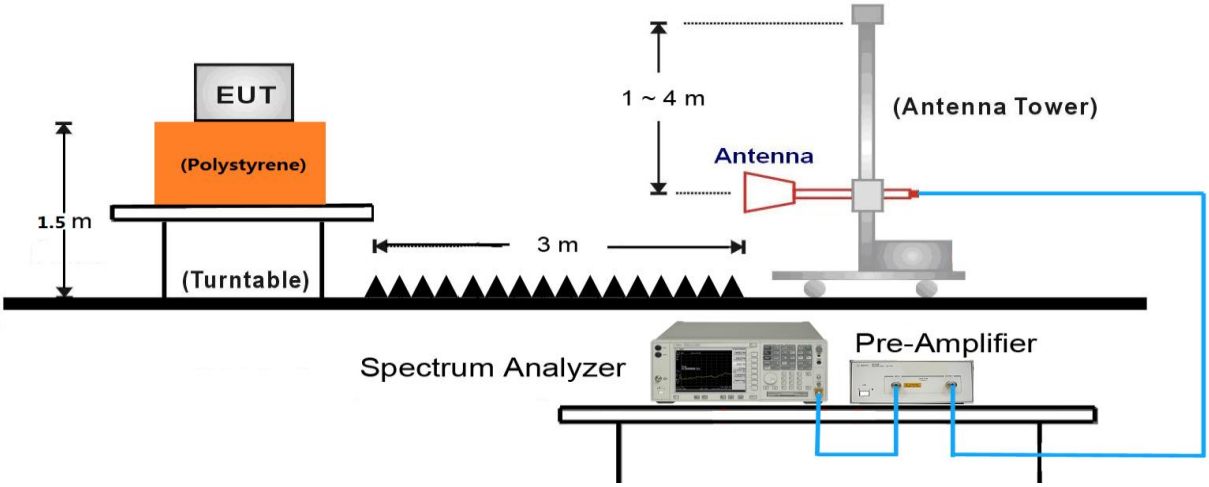

Above 40GHz Test Setup:

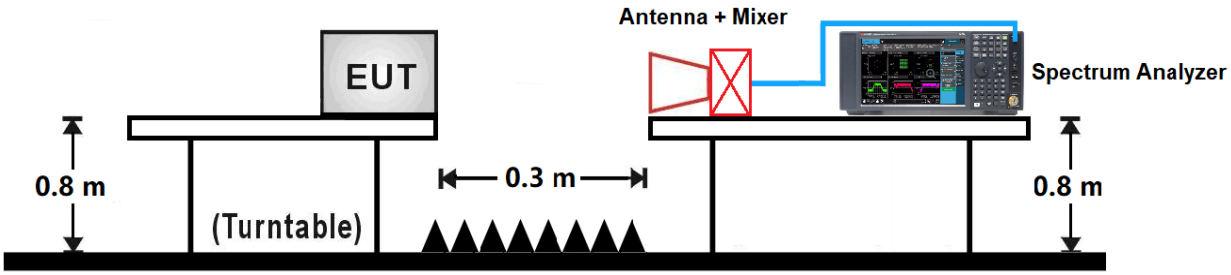

7.5.5.Test Result

Product	Wireless Gigabit Adapter	Temperature	23°C
Test Engineer	Vincent Yu	Relative Humidity	54%
Test Site	AC1	Test Date	2018/11/10
Test Range	1GHz ~ 40GHz		

Frequency (MHz)	Reading Level (dBμV)	Factor (dB)	Measure Level (dBμV/m)	Limit (dBμV/m)	Margin (dB)	Detector	Polarization
Channel 1 (58.32GHz)							
5105.5	36.5	6.6	43.1	74.0	-30.9	Peak	Horizontal
7477.0	36.3	12.9	49.2	74.0	-24.8	Peak	Horizontal
19518.0	41.7	8.3	50.0	74.0	-24.0	Peak	Horizontal
27570.0	39.0	12.1	51.1	74.0	-22.9	Peak	Horizontal
4289.5	37.2	4.3	41.5	74.0	-32.5	Peak	Vertical
8080.5	35.9	13.7	49.6	74.0	-24.4	Peak	Vertical
25370.0	39.2	11.6	50.8	74.0	-23.2	Peak	Vertical
28714.0	38.5	12.9	51.4	74.0	-22.6	Peak	Vertical
Channel 2 (60.48GHz)							
2870.0	38.9	0.5	39.4	74.0	-34.6	Peak	Horizontal
3694.5	38.1	2.3	40.4	74.0	-33.6	Peak	Horizontal
19529.0	42.5	8.2	50.7	74.0	-23.3	Peak	Horizontal
26668.0	38.5	12.3	50.8	74.0	-23.2	Peak	Horizontal
2207.0	40.1	-0.6	39.5	74.0	-34.5	Peak	Vertical
3048.5	38.5	0.9	39.4	74.0	-34.6	Peak	Vertical
19518.0	41.4	8.3	49.7	74.0	-24.3	Peak	Vertical
29176.0	38.4	13.4	51.8	74.0	-22.2	Peak	Vertical
Channel 4 (64.80GHz)							
5114.0	36.1	6.6	42.7	74.0	-31.3	Peak	Horizontal
7672.5	36.4	12.8	49.2	74.0	-24.8	Peak	Horizontal
21113.0	41.4	7.9	49.3	74.0	-24.7	Peak	Horizontal
28868.0	38.5	12.9	51.4	74.0	-22.6	Peak	Horizontal
4527.5	37.9	4.9	42.9	74.0	-31.1	Peak	Vertical
6559.0	35.7	10.2	45.9	74.0	-28.1	Peak	Vertical
27614.0	38.6	12.3	50.9	74.0	-23.1	Peak	Vertical
30837.0	39.3	13.4	52.7	74.0	-21.3	Peak	Vertical

Note:

1. Measure Level (dBμV/m) = Reading Level (dBμV) + Factor (dB)

   Factor (dB) = Cable Loss (dB) + Antenna Factor (dB/m) - Pre_Amplifier Gain (dB)

2. Average measurement was not performed when the peak level lower than average limit.

Product	Wireless Gigabit Adapter	Temperature	23°C
Test Engineer	Vincent Yu	Relative Humidity	54%
Test Site	AC1	Test Date	2018/11/19
Test Range	40GHz ~ 200GHz		

Frequency (GHz)	Reading Level @ 0.3m (dBμV)	Factor (dB)	Measure Level @ 0.3m (dBμV/m)	Measure Level @ 3m (dBμV/m)	Power Density (pW/cm^2)	Limit (pW/cm^2)	Result
Channel 1 (58.32GHz)							
117.5	20.7	71.6	92.3	72.3	4.5	90.0	Pass
115.8	19.3	71.5	90.8	70.8	3.2	90.0	Pass
143.4	13.3	74.6	87.9	67.9	1.6	90.0	Pass
175.5	14.2	75.1	89.3	69.3	2.3	90.0	Pass
Channel 2 (60.48GHz)							
120.1	21.3	71.6	92.9	72.9	5.2	90.0	Pass
121.8	24.7	71.7	96.4	76.4	11.6	90.0	Pass
169.1	13.3	75.0	88.3	68.3	1.8	90.0	Pass
196.6	13.4	75.5	88.9	68.9	2.1	90.0	Pass
Channel 4 (64.80GHz)							
128.7	25.1	71.9	97.0	77.0	13.3	90.0	Pass
130.5	23.2	72.0	95.2	75.2	8.8	90.0	Pass
146.7	14.0	74.8	88.8	68.8	2.0	90.0	Pass
183.1	14.9	75.4	90.3	70.3	2.8	90.0	Pass

Note:

1. Measure Level @ 0.3m = Reading Level @0.3m + Factor

Factor (dB) = Cable Loss (dB) + Antenna Factor (dB/m) + Mixer Conversion Loss (dB)

2. Measure Level @ 3m = Measure Level @ 0.3m + 20 * log(0.3m / 3m)

3. Power Density = $(10^8 / 377) * \{10^{[(\text{Measure Level @3m } -120) / 20]}\}^2$

The worst case of Radiated Emission below 1GHz:

Site: AC1	Time: 2018/11/08 - 07:09
Limit: FCC_Part15.209_RE(3m)	Engineer: Messiah Li
Probe: VULB 9168_20-2000MHz	Polarity: Horizontal
EUT: Wireless Gigabit Adapter	Power: DC 5V
Worse Case Mode: Transmit at channel 1 - 58.32GHz	

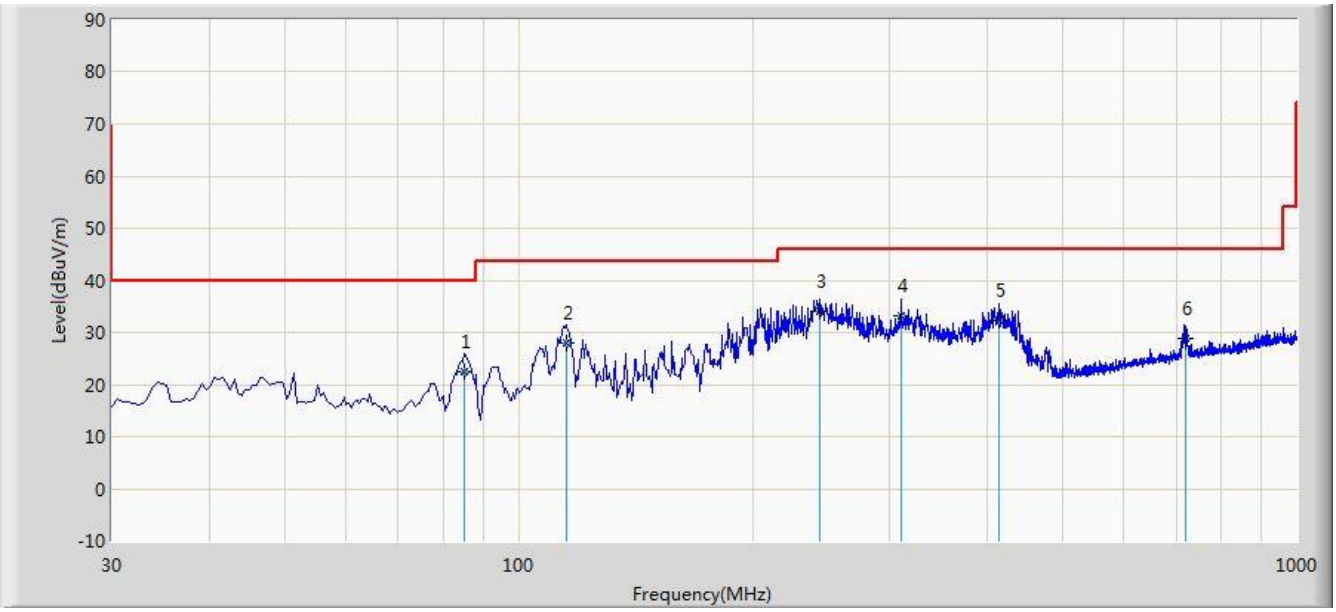

No	Flag	Mark	Frequency (MHz)	Measure Level (dBuV/m)	Reading Level (dBuV)	Over Limit (dB)	Limit (dBuV/m)	Factor (dB)	Type
1			85.290	22.548	12.325	-17.452	40.000	10.223	QP
2			115.360	27.967	15.259	-15.533	43.500	12.709	QP
3		*	243.885	33.972	21.043	-12.028	46.000	12.929	QP
4			309.845	33.290	18.625	-12.710	46.000	14.664	QP
5			415.090	32.359	15.353	-13.641	46.000	17.006	QP
6			720.155	28.813	6.425	-17.187	46.000	22.388	QP

Note 1: Measure Level (dBμV/m) = Reading Level (dBμV) + Factor (dB)

Factor (dB) = Cable Loss (dB) + Antenna Factor (dB/m)

Note 2: The test trace is same as the ambient noise and the amplitude of the emissions are attenuated more than 20dB below the limit (the test frequency range: 9kHz ~ 30MHz), therefore no data appear in the report.

Site: AC1	Time: 2018/11/08 - 07:15
Limit: FCC_Part15.209_RE(3m)	Engineer: Messiah Li
Probe: VULB 9168_20-2000MHz	Polarity: Vertical
EUT: Wireless Gigabit Adapter	Power: DC 5V
Worse Case Mode: Transmit at channel 1 - 58.32GHz	

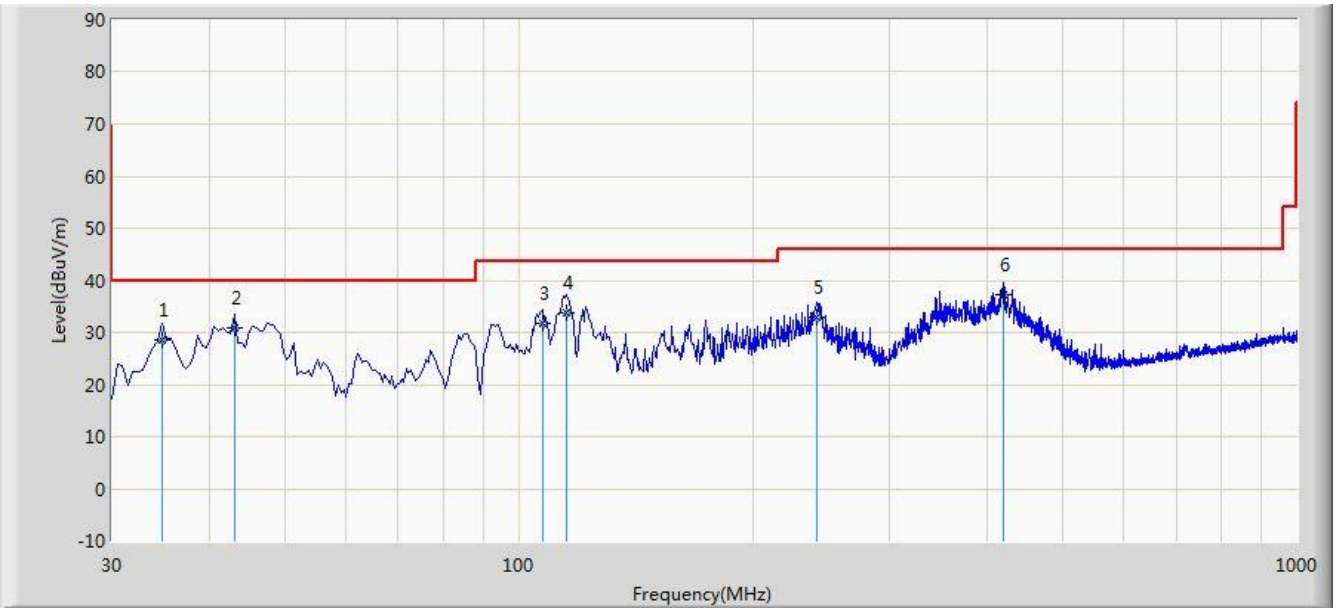

No	Flag	Mark	Frequency (MHz)	Measure Level (dBuV/m)	Reading Level (dBuV)	Over Limit (dB)	Limit (dBuV/m)	Factor (dB)	Type
1			34.850	28.527	14.556	-11.473	40.000	13.972	QP
2			43.095	30.944	16.528	-9.056	40.000	14.416	QP
3			107.600	31.857	20.012	-11.643	43.500	11.845	QP
4			115.360	33.908	21.200	-9.592	43.500	12.709	QP
5			241.945	33.027	20.127	-12.973	46.000	12.900	QP
6		*	419.455	37.252	20.124	-8.748	46.000	17.128	QP

Note 1: Measure Level (dBμV/m) = Reading Level (dBμV) + Factor (dB)

Factor (dB) = Cable Loss (dB) + Antenna Factor (dB/m)

Note 2: The test trace is same as the ambient noise and the amplitude of the emissions are attenuated more than 20dB below the limit (the test frequency range: 9kHz ~ 30MHz), therefore no data appear in the report.

7.6. Frequency Stability

7.6.1.Test Limit

Fundamental emissions must be contained within the frequency bands 57 - 71GHz during all conditions of operation. Equipment is presumed to operate over the temperature range -20 to +50 degrees Celsius with an input voltage variation of 85% to 115% of rated input voltage, unless justification is presented to demonstrate otherwise.

7.6.2.Test Procedure used

ANSI C63.10 Section 9.14

7.6.3.Test Procedure

1. Arrange EUT and test equipment according Section 7.6.4.
2. With the EUT at ambient temperature and voltage source set to the EUT nominal operating voltage (100%), record the spectrum mask of the EUT emission on the spectrum analyzer.
3. Vary EUT power supply between 85% and 115% of nominal, and record the frequency excursion of the EUT emission mask.
4. Set the power supply to 100% nominal setting, and raise EUT operating temperature to 50 °C.
5. Record the frequency excursion of the EUT emission mask.
6. Repeat step 5 at each 10°C increment down to -20 °C.

7.6.4.Test Setup

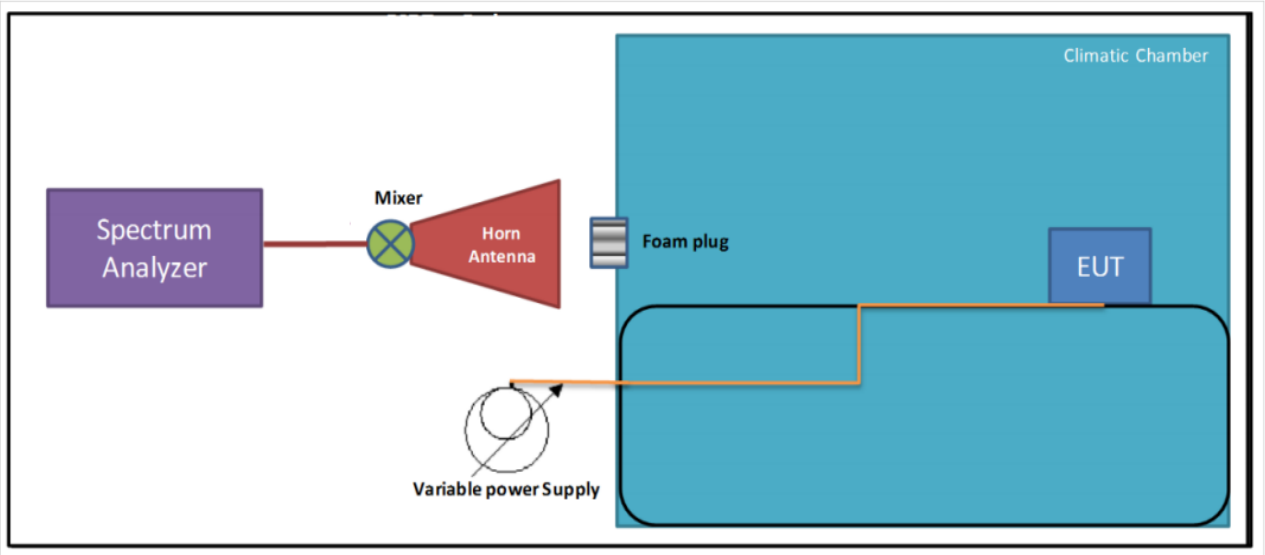

7.6.5.Test Result

Test Engineer	Vincent Yu	Temperature	-20 ~ 50°C
Test Time	2018/11/21	Relative Humidity	52%RH
Test Mode	Carrier Mode	Test Site	TR3

Voltage (%)	Power (VAC)	Temp (℃)	Channel 1 (GHz)	Channel 4 (GHz)	Limit (GHz)	Result
100%	120	- 20	58.321065 GHz	64.803132 GHz	57 ~ 71	Pass
		- 10	58.321051 GHz	64.803121 GHz	57 ~ 71	Pass
		0	58.320174 GHz	64.803137 GHz	57 ~ 71	Pass
		+ 10	58.320201 GHz	64.803184 GHz	57 ~ 71	Pass
		+ 20 (Ref)	58.320203 GHz	64.802841 GHz	57 ~ 71	Pass
		+ 30	58.320381 GHz	64.803547 GHz	57 ~ 71	Pass
		+ 40	58.320110 GHz	64.803551 GHz	57 ~ 71	Pass
		+ 50	58.320108 GHz	64.803578 GHz	57 ~ 71	Pass
115%	138	+ 20	58.321574 GHz	64.803544 GHz	57 ~ 71	Pass
85%	102	+ 20	58.321621 GHz	64.803512 GHz	57 ~ 71	Pass

7.7. Group Installation

7.7.1.Test Limit

Any transmitter that has received the necessary FCC equipment authorization under the rules of this chapter may be mounted in a group installation for simultaneous operation with one or more other transmitter(s) that have received the necessary FCC equipment authorization, without any additional equipment authorization. However, no transmitter operating under the provisions of this section may be equipped with external phase-locking inputs that permit beam-forming arrays to be realized.

7.7.2.Test Procedure used

N/A

7.7.3.Test Procedure

N/A

7.7.4.Test Setup

N/A

7.7.5.Test Result

The frequency, amplitude and phase of the transmit signal are set within the EUT. There are no external phase-locking inputs or any other means of combining two or more units together to realize a beam-forming array.

7.8. AC Conducted Emissions Measurement

7.8.1.Test Limit

FCC 15.207 Limits		
Frequency (MHz)	QP (dBuV)	AV (dBuV)
0.15 ~ 0.50	66 ~ 56	56 ~ 46
0.50 ~ 5.0	56	46
5.0 ~ 30	60	50
Note 1: The lower limit shall apply at the transition frequencies. Note 2: The limit decreases linearly with the logarithm of the frequency in the range 0.15MHz to 0.5MHz.		

7.8.2.Test Setup

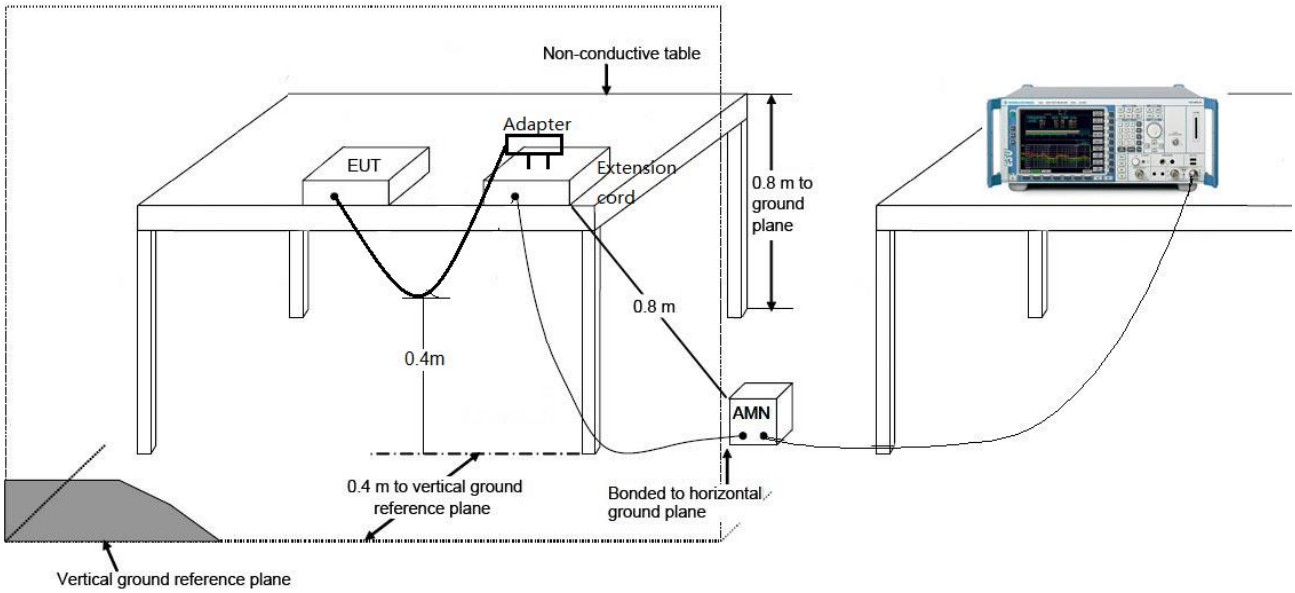

7.8.3.Test Result

Site: SR2	Time: 2018/11/22 - 13:23
Limit: FCC_Part15.207_CE_AC Power	Engineer: Cloud Guo
Probe: ENV216_101683_Filter On	Polarity: Line
EUT: Wireless Gigabit Adapter	Power: AC 120V/60Hz
Test Mode 1	

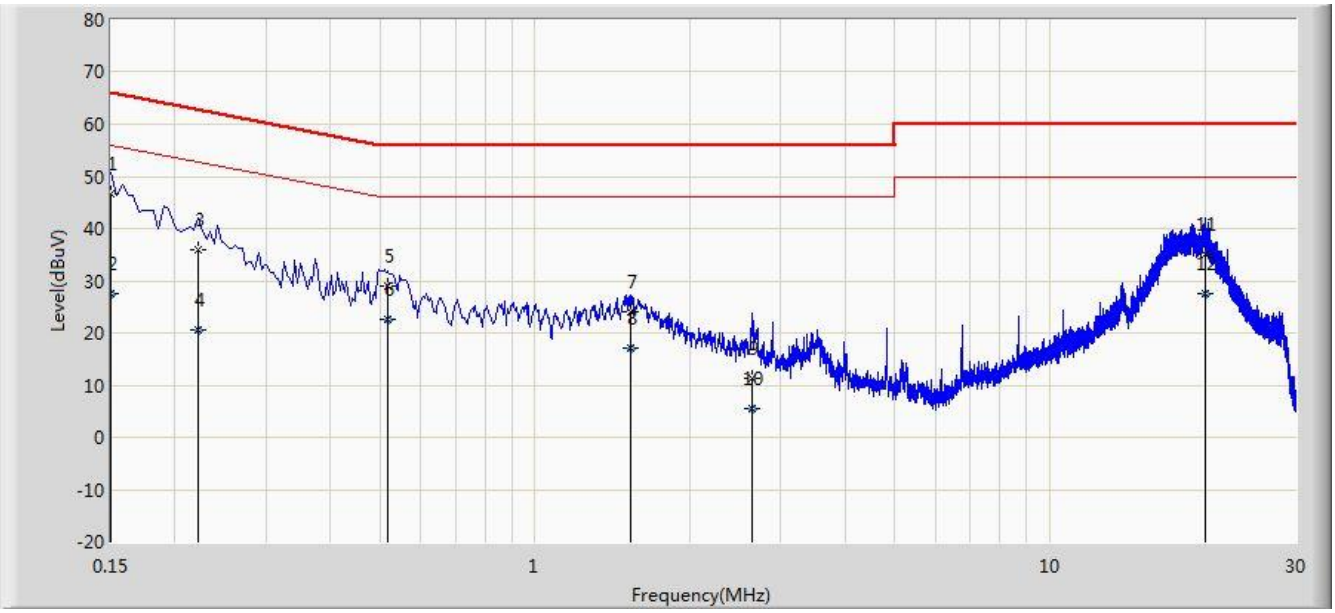

No	Flag	Mark	Frequency (MHz)	Measure Level (dBuV)	Reading Level (dBuV)	Over Limit (dB)	Limit (dBuV)	Factor (dB)	Type
1		*	0.150	46.580	35.412	-19.420	66.000	11.168	QP
2			0.150	27.564	16.395	-28.436	56.000	11.168	AV
3			0.222	35.868	25.928	-26.875	62.744	9.941	QP
4			0.222	20.592	10.651	-32.152	52.744	9.941	AV
5			0.518	28.924	18.768	-27.076	56.000	10.156	QP
6			0.518	22.741	12.585	-23.259	46.000	10.156	AV
7			1.530	24.015	14.128	-31.985	56.000	9.887	QP
8			1.530	17.142	7.255	-28.858	46.000	9.887	AV
9			2.646	11.169	1.317	-44.831	56.000	9.852	QP
10			2.646	5.497	-4.355	-40.503	46.000	9.852	AV
11			20.094	34.959	24.820	-25.041	60.000	10.139	QP
12			20.094	27.458	17.319	-22.542	50.000	10.139	AV

Note: Measure Level (dBμV) = Reading Level (dBμV) + Factor (dB)

Factor (dB) = Cable Loss (dB) + LISN Factor (dB)

Site: SR2	Time: 2018/11/22 - 13:38
Limit: FCC_Part15.207_CE_AC Power	Engineer: Cloud Guo
Probe: ENV216_101683_Filter On	Polarity: Neutral
EUT: Wireless Gigabit Adapter	Power: AC 120V/60Hz
Test Mode 1	

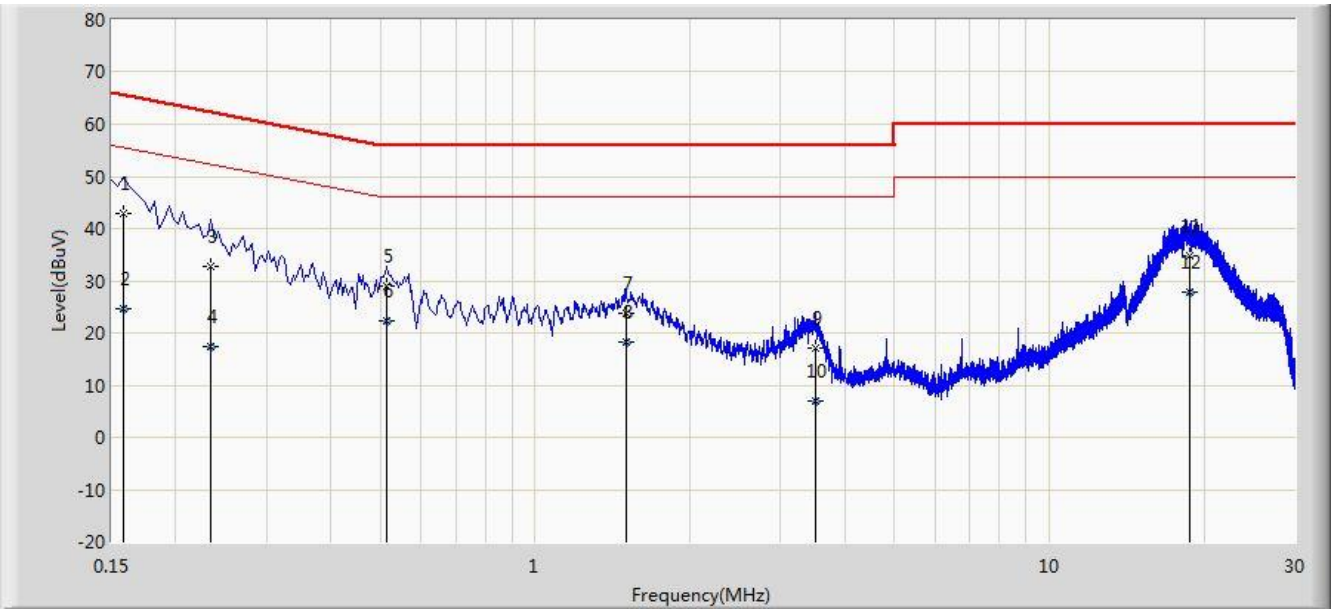

No	Flag	Mark	Frequency (MHz)	Measure Level (dBuV)	Reading Level (dBuV)	Over Limit (dB)	Limit (dBuV)	Factor (dB)	Type
1			0.158	42.941	32.651	-22.627	65.568	10.290	QP
2			0.158	24.668	14.378	-30.900	55.568	10.290	AV
3			0.234	32.789	22.800	-29.518	62.307	9.989	QP
4			0.234	17.447	7.459	-34.859	52.307	9.989	AV
5			0.514	28.988	18.812	-27.012	56.000	10.176	QP
6			0.514	22.403	12.227	-23.597	46.000	10.176	AV
7			1.502	23.771	13.881	-32.229	56.000	9.890	QP
8			1.502	18.201	8.310	-27.799	46.000	9.890	AV
9			3.498	17.146	7.232	-38.854	56.000	9.914	QP
10			3.498	7.008	-2.906	-38.992	46.000	9.914	AV
11			18.783	34.694	24.557	-25.306	60.000	10.137	QP
12		*	18.783	27.750	17.613	-22.250	50.000	10.137	AV

Note: Measure Level (dBμV) = Reading Level (dBμV) + Factor (dB)

Factor (dB) = Cable Loss (dB) + LISN Factor (dB)

8. CONCLUSION

The data collected relate only the item(s) tested and show that the **Wireless Gigabit Adapter** is in compliance with Part 15C of the FCC Rules.

The End

Appendix A - Test Setup Photograph

Refer to “1810RSU034-UT” file.

Appendix B - EUT Photograph

Refer to “1810RSU034-UE” file.