MAXIIOT

LoRa Concentrator Card

GL5712 Datasheet

Version: LoRa Concentrator_GL5712_Datasheet_V1.0.0

Date: 2018-07-12

Maxiiot Ltd.

Document Revision Record

Version	Date	Description	
V1.0.0	2018-07-12	Preliminary version	Ming

Copyright Notice

All contents in the files are protected by copyright law, and all copyrights are reserved by Maxiiot Ltd. Without written permission, all commercial use of the files from Maxiiot are forbidden, such as copy, distribute,reproduce the files, etc., but non-commercial purpose, downloaded or printed by individual are welcome.

Disclaimer

Maxiiot Ltd reserves the right to change, modify or improve the document and product described herein . Its contents are subject to change without notice. These instructions are intended for you use at your own risk .

Table of Contents

1. Description.....1

1.1 Overview.....1

1.2 Product features.....1

1.3 Function block diagram.....2

2. Pin definition.....3

2.1 Pin assignment.....3

2.2 Pin description.....3

3. Specifications.....5

3.1 General specifications.....5

3.2 Electric specifications.....5

3.3 Absolute maximum rating.....6

3.4 Operating conditions.....6

4. Typical hardware connections.....8

4.1 Physical dimensions.....8

4.2 Reference Circuit.....8

4.3 Interfaces.....9

4.3.1 Interface to host MCU.....9

4.3.2 Power pins.....9

4.3.3 RF connection.....9

4.3.4 RESET pin.....9

4.3.5 GPS_PPS.....9

4.3.6 RF enable.....9

5. Reliability test and approves.....10

6. Package.....10

7. Contact Us.....10

1. Description

1.1 Overview

GL5712 is a LoRa concentrator card with industrial standard mini PCI express form factor based on SX1301 chipset and 2*SX1257 RF end-front . This mPCIe module can be used in any embedded platform offering a free mPCIe slot with USB/SPI connectivity and capable of providing enough power for the module, enables low-power wide area communication capabilities to your new gateway design or existing industrial routers/computer.

Each module support eight(8) programmable Lora parallel demodulation channels, allowing it to receive up to eight LoRa® modulated packets simultaneously. -142.5dBm high sensitivity combine with 17.5dBm power amplifer yields industry leading link budget making it optimal for applications requiring extended range and robustness.

Typical applications

- ✓ Automated Meter Reading
- ✓ Home and Building Automation
- ✓ Wireless Alarm and Security Systems
- ✓ Industrial Monitoring and Control
- ✓ Machine to Machine (M2M)
- ✓ Internet of Things (IoT)

GL5712 LoRa concentrator cards are available in four product variants

NO.	Model	Description	Remark
1	GL5712-EX	863~870MHz IPEX connector,is mainly designde for operation in Europe and other countries.	
2	GL5712-UX	902~928MHz IPEX connector,is mainly designed for operation in America south-east Asia.	
3	GL5712-EA	863~870MHz SMA connector,is mainly designde for operation in Europe and other countries.	
4	GL5712-UA	902~928MHz SMA connector,is mainly designed for operation in America south-east Asia.	

Table1.1 Product variants

1.2 Product features

- ✓ **Multichannel:** Eight(8) programmable Lora parallel demodulation channels.
- ✓ **SPI Interface:**The SPI interface gives access to the configuration register of SX1301 via a synchronous full-duplex protocol.
- ✓ **USB2.0 Interface:** Build in FT232H chip convert SPI interface of SX1301 to USB2.0 .
- ✓ Compact mini PCI express form factor TYP. 50.8*30.3*4.7mm (W*L*H)
- ✓ Environmentally friendly RoHS compliant
- ✓ Compliance:
  - US Version (GL5712-U): Certified to FCC Modular Transmitter Standards
  - EU Version (GL5712-E): Certified to CE Modular Transmitter Standards

1.3 Function block diagram

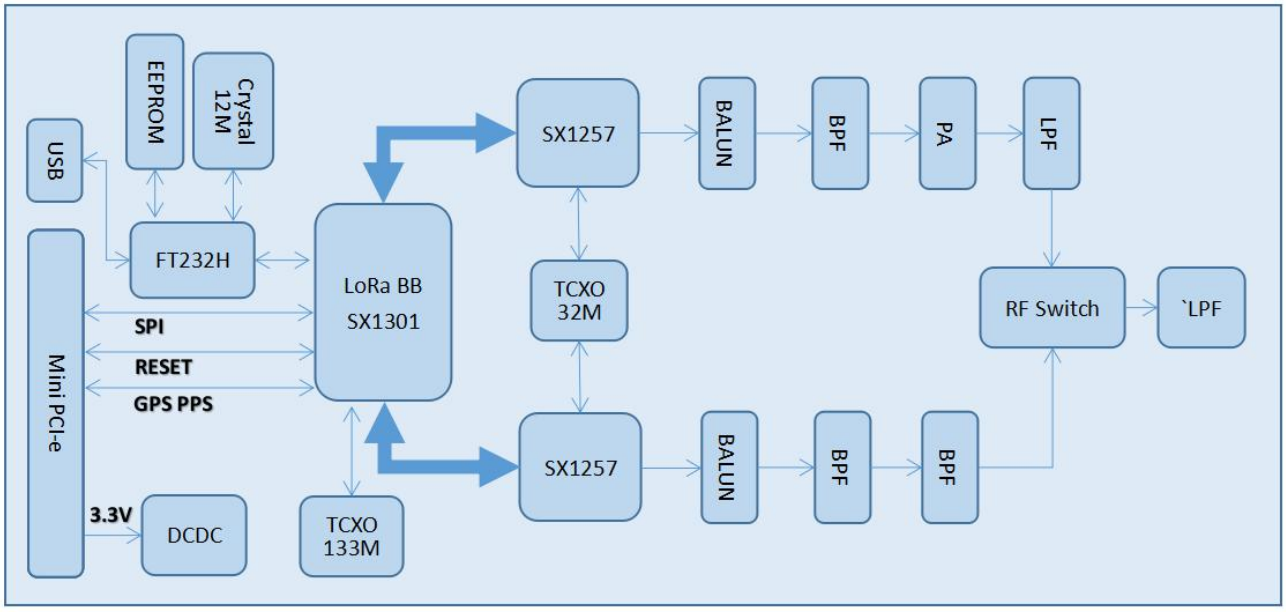

2. Pin Definition

2.1 Pin assignment

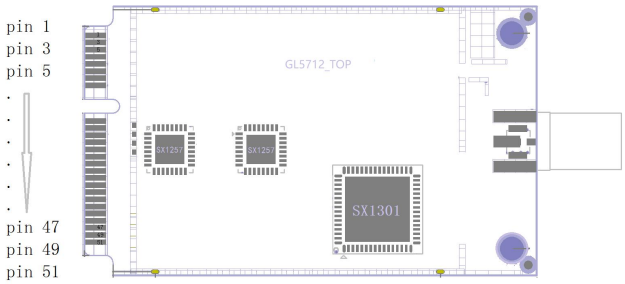

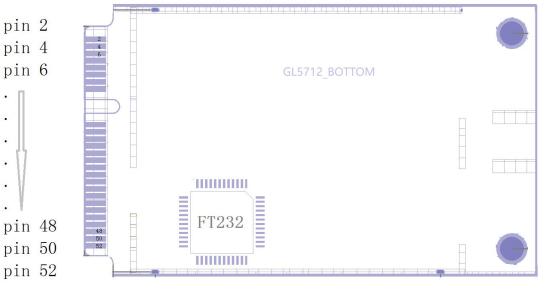

2.2 Pin description

No.	Symbol	Type	Description
1	NC	N/A	Not connected (Default)
2	+3.3V	Supply input	Supply voltage to the engine board.
3	NC	N/A	Not connected (Default)
4	GND	GND	Ground
5	NC	N/A	Not connected (Default)
6	NC	N/A	Not connected (Default)
7	NC	N/A	Not connected (Default)
8	NC	N/A	Not connected (Default)
9	GND	GND	Ground
10	NC	N/A	Not connected (Default)
11	NC	N/A	Not connected (Default)
12	NC	N/A	Not connected (Default)
13	NC	N/A	Not connected (Default)
14	NC	N/A	Not connected (Default)
15	GND	GND	Ground
16	NC	N/A	Not connected (Default)
17	NC	N/A	Not connected (Default)
18	GND	GND	Ground

19	NC	N/A	Not connected (Default)
20	NC	N/A	Not connected (Default)
21	GND	GND	Ground
22	/Reset	Reset input	Reset Module, Active-low device Reset input
23	NC	N/A	Not connected (Default)
24	+3.3V	Suupply input	Main power supply to the engine board.
25	NC	N/A	Not connected (Default)
26	GND	GND	Ground
27	GND	GND	Ground
28	NC	N/A	Not connected (Default)
29	GND	GND	Ground
30	NC	N/A	Not connected (Default)
31	NC	N/A	Not connected (Default)
32	NC	N/A	Not connected (Default)
33	NC	N/A	Not connected (Default)
34	GND	GND	Ground
35	GND	GND	Ground
36	USB_DM	USB Data Line D-	USB Data Signal Minus
37	GND	GND	Ground
38	USB_DP	USB Data Line D+	USB Data Signal Plus
39	+3.3V	Supply inout	Main power supply to the engine board.
40	GND	GND	Ground
41	+3.3V	Supply inout	Main power supply to the engine board.
42	NC	N/A	Not connected (Default)
43	GND	GND	Ground
44	NC	N/A	Not connected (Default)
45	SCK	Host SPI interface	SPI interface
46	GPS_IN	GPS_IN	GPS pps in
47	MISO	Host SPI interface	SPI interface
48	NC	N/A	Not connected
49	MOSI	Host SPI interface	SPI interface
50	GND	N/A	Ground
51	CSN	Host SPI interface	SPI interface
52	+3.3V	Supply inout	Main power supply to the engine board.

Table 2.1 Pin definition

3. Specifications

3.1 General specifications

Parameters	Description
Modulation type	ISM Band LoRa®
LoRa chipset	SX1301
Multi-channel	Eight (8) uplink , one (1) down link
Package	Mini PCI express
Host interface	USB/SPI
Frequency	863~870MHZ, 902~928MHZ(Opt.)
Receiving sensitivity	-142.5dBm
Tx power	17.5 dBm
Communication range	3~5KM in urban area , >15KM line-of-sight
Supply voltage	+3.3V
Power consumption	Tx(Max)<700mA Rx <200mA
Operating temperature	-40～+85℃ (industrial grade)
Operating humidity	10%～90%, no-condensing
Dimensions	TYP. 50.8*30.3*4.5mm (W*L*H)
ESD (Human Body Model)	JEDEC JS-001 Standard ±1kV, Class 2

Table3.1 General specification

3.2 Electric specifications

ESD Notice: GL5712 is a high performance radio frequency device. It satisfies:

- ✓ Class 2 of the JEDEC standard JESD22-A114 (Human Body Model) on all pins.
- ✓ Class III of the JEDEC standard JESD22-C101 (Charged Device Model) on all pins

It should thus be handled with all the necessary ESD precautions to avoid any permanent damage.

The limiting values given are in accordance with the Absolute Maximum Rating System . Stress above one or more of the limiting values may cause permanent damage to the device. These are stress ratings only, and operation of the device at these or at any other conditions above those given in the Characteristics sections of the specification is not implied. Exposure to these limits for extended periods may affect device reliability.

3.3 Absolute maximum rating

Symbol	Description	Condition	Min	Max.	Unit
3.3Vaux	Module supply voltage	Input DC voltage at 3.3Vaux pins	–0.3	3.6	V
USB	USB D+/D- pins	Input DC voltage at USB interface pins		3.6	V
SPDT_SEL	Port select	Input DC voltage at SPDT_SEL input pins	–0.3	3.6	V
RESET	MPCI reset input	Input DC voltage at RESET input pin	–0.3	3.6	V
SPI	SPI interface	Input DC voltage at SPI interface pin	–0.3	3.6	V
GPS_PPS	GPS 1 pps input	Input DC voltage at GPS_PPS input pin	–0.3	3.6	V
Rho_ANT	Antenna ruggedness	Output RF load mismatch ruggedness at ANT1		10:1	VSWR
Tstg	Storage Temperature		–40	85	°C

Table3.2 absolute maximum rating

⚠ Stressing the device beyond the "Absolute Maximum Ratings" may cause permanent damage. The product is not protected against over-voltage or reversed voltages. If necessary, voltage spikes exceeding the power supply voltage specification, given in table above, must be limited to values within the specified boundaries by using appropriate protection diodes.

3.4 Operating conditions

☞ All specifications are at an ambient temperature of 25 ° C. Extreme operating temperatures can significantly impact specification values. Applications operating near the temperature limits should be tested to ensure the specification.

Parameter	Min.	Typ	Max.	Unit	Remarks
Normal operating temperature	-20	+25	+65	°C	fully functional and meet 3GPP specifications
Extended operating temperature	-40		+85	°C	RF performance may be affected by outside normal operating range
Storage Temperature	-40		+125	°C	

Table3.3 operating temperature range

☞ Operating beyond the specified operating conditions can affect device reliability.

Symbol	Parameter	Min.	Typical	Max.	Unit
3.3Vaux	operating supply voltage	3.00	3.30	3.60	V

Table3.4 Operating power supply range

☞ Operating beyond the specified operating conditions can affect device reliability.

Item	Parameter	SPEC MIN	SPEC TYP	SPEC MAX	Unit	Condition
TX	Transmit Frequency	863		870	MHz	ISM Band(GL5712-E)
	Transmit Frequency	902		928	MHz	ISM Band(GL5712-U)
	Transmit Power		+27	+30	dBm	Including ANT Gain
	Frequency Deviation		12.5		KHz	25 ℃
RX	Receiving Sensitivity		-142.5		dBm	

Table3.5 RF receiver characteristics

GL5712 series LoRa RF characteristics are specified in the SX1257series Data Sheet .

Mode	Condition	Min	Typ	Max	Unit
RF Idle	All of the chip on the board enter idle mode or shutdown.		70		**uA**
Rx active	TX disabled and shutdown PA.		120	185	**mA**
Tx active	The power of TX channel is 17.5 dBm and 3.3V supply.		520	700	**mA**

Table3.6 Current consumption

4. Typical Hardware Connections

4.1 Physical dimensions

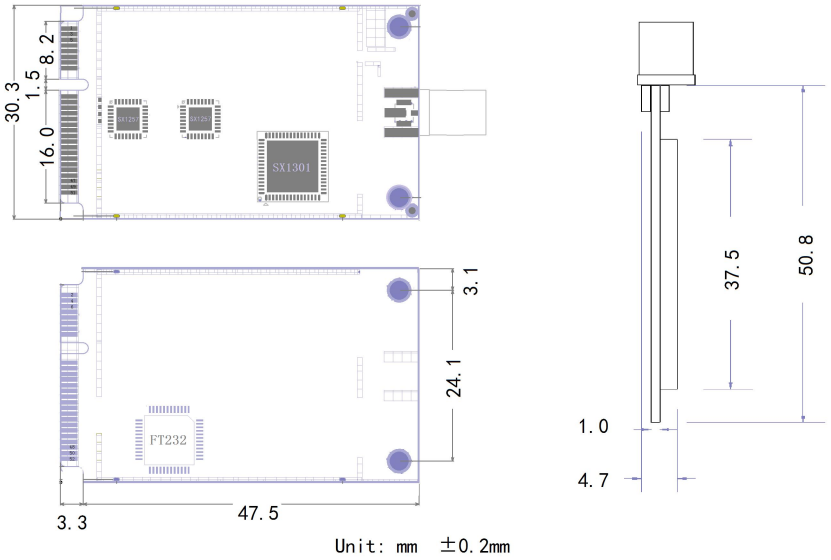

Item	Length	Width	Thickness	Unit	Remark
Dimensions	50.8	30.3	4.7	mm	

Table4.1 dimensions

4.2 Reference Circuit

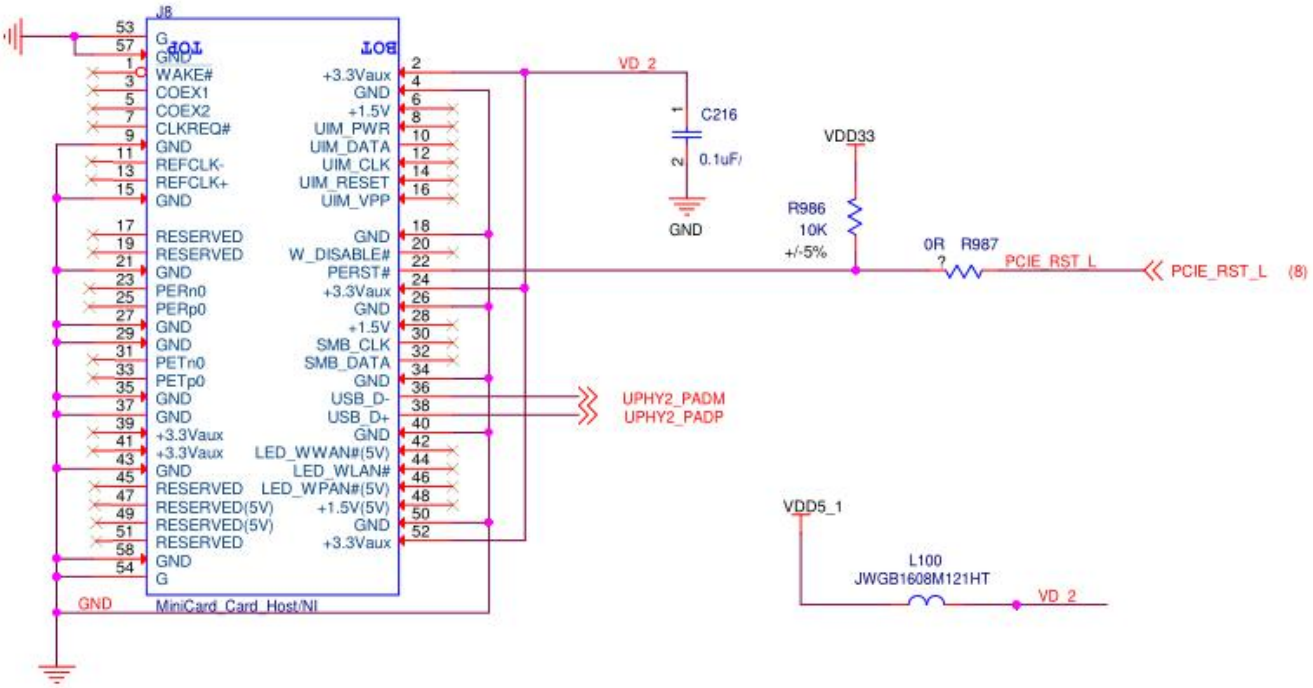

4.3 Interfaces

Reference circuit design shows the typical hardware connections for the module. Interfacing to the module requires connecting to the signals provided on the GL5712 mPCIe connector as listed in pin description. Specific interface connections are discussed in this chapter.

4.3.1 Interface to host MCU

✓ **SPI interface**

A SPI interface is provided on the PCIe_SCK, PCIe_MISO, PCIe_MOSI, PCIe_CSN pins of the system connector. The SPI interface gives access to the configuration register of SX1301 via a synchronous full-duplex protocol. Only the slave side is implemented.

✓ **USB interface**

GL5712 series modules support high speed USB interface with a built in TF232H chip convert SPI to USB, can be connected to any USB host equipment with compatible drivers. The module can uses the USB signals through the mPCIe interface.

4.3.2 Power pins

GL5712 series modules has multiple power and ground pins available on the mPCIe connector.
It is recommended that all power and ground pins be used when connecting to the module.

4.3.3 RF connection

GL5712 series modules have a U.FL connector for interfacing with an external antenna. For proper operation, antenna selection must consider frequency band and impedance.

4.3.4 RESET pin

GL5712 series modules have an active-low reset input. Pulling this signal low during normal operation will cause the module to execute a reset cycle.

4.3.5 GPS_PPS

GL5712 series modules include a GPS_PPS input used to receive time-stamped packets.

4.3.6 RF enable

GL5712 series modules have an input signal used to enable the RF radio on the module. A low level on the RF_ENABLE pin will disable all RF transmission and reception.

5. Reliability Test and Approves

Tests for product family qualifications are according to ISO 16750 "Road vehicles – Environmental conditions and testing for electrical and electronic equipment", and appropriate standards.

Products marked with this lead-free symbol on the product label comply with the "Directive 2002/95/EC and Directive 2011/65/EU of the European Parliament and the Council on the Restriction of Use of certain Hazardous Substances in Electrical and Electronic Equipment" (RoHS). All Maxiiot GL5712 modules are RoHS compliant.

Compliance(Pending):
- US Version (GL5712-U): Certified to FCC Modular Transmitter Standards
- EU Version (GL5712-E): Certified to CE Modular Transmitter Standards

6. Package

Module	Package			Article number
	Form	QTY	Size	
GL5712	Trays	As required	As required	Undetermined

Table6.1 package

7. Contact Us

Maxiiot Ltd
Web: www.maxiiot.com
Tel:+86-755-2645-9429
Fax: +86-755-2947-6513
Office address : Room 302,3F, No. 16, Lane 1,Liuxian No.2 Road,Bao'an District.
518100 Shenzhen, China

Antenna Type:Cylindrical Antenna
Antenna Gain(Peak):5 dBi

Federal Communication Commission Statement (FCC, U.S.)

This equipment has been tested and found to comply with the limits for a Class B digital device, pursuant to Part 15 of the FCC Rules. These limits are designed to provide reasonable protection against harmful interference in a residential installation. This equipment generates, uses and can radiate radio frequency energy and, if not installed and used in accordance with the instructions, may cause harmful interference to radio communications. However, there is no guarantee that interference will not occur in a particular installation. If this equipment does cause harmful interference to radio or television reception, which can be determined by turning the equipment off and on, the user is encouraged to try to correct the interference by one of the following measures:
- Reorient or relocate the receiving antenna.
- Increase the separation between the equipment and receiver.
- Connect the equipment into an outlet on a circuit different from that to which the receiver is connected.
- Consult the dealer or an experienced radio/TV technician for help.

This device complies with Part 15 of the FCC Rules. Operation is subject to the following two conditions: (1) This device may not cause harmful interference, and (2) this device must accept any interference received, including interference that may cause undesired operation.

FCC Caution:
Any changes or modifications not expressly approved by the party responsible for compliance could void the user's authority to operate this equipment.

IMPORTANT NOTES

Co-location warning:
This transmitter must not be co-located or operating in conjunction with any other antenna or transmitter.

OEM integration instructions:
This device is intended only for OEM integrators under the following conditions:

The transmitter module may not be co-located with any other transmitter or antenna. The module shall be only used with the external antenna(s) that has been originally tested and certified with this module.

As long as the conditions above are met, further transmitter test will not be required. However, the OEM integrator is still responsible for testing their end-product for any additional compliance requirements required with this module installed (for example, digital device emissions, PC peripheral requirements, etc.).

Validity of using the module certification:
In the event that these conditions cannot be met (for example certain laptop configurations or co-location with another transmitter), then the FCC authorization for this module in combination with the host equipment is no longer considered valid and the FCC ID of the module cannot be used on the final product. In these circumstances, the OEM integrator will be responsible for re-evaluating the end product (including the transmitter) and obtaining a separate FCC authorization.

End product labeling:
The final end product must be labeled in a visible area with the following: “Contains Transmitter Module FCC ID: 2ARPP-GL5712UX

Information that must be placed in the end user manual:
The OEM integrator has to be aware not to provide information to the end user regarding how to install or remove this RF module in the user's manual of the end product which integrates this module. The end user manual shall include all required regulatory information/warning as show in this manual.

FCC Radiation Exposure Statement:
This equipment complies with FCC radiation exposure limits set forth for an uncontrolled environment. This equipment should be installed and operated with minimum distance 20cm between the radiator & your body.

Antenna Type:Cylindrical Antenna
Antenna Gain(Peak):5 dBi