ACCREDITED
Certificate #2861.01

GRGTEST

TEST REPORT

VerifiedCode:729388

Report No.:	E202008101990-18	**Application No.:**	E202008101990
Client:	BY TECHDESIGN S.L.		
Address:	Calle Thomas Edison 5, Arganda del Rey Madrid, 28500, Spain		
Sample Description:	Access Control System - RF readers		
Model:	42553		
Test Specification:	FCC 47 CFR Part 15 Subpart C		
ReceiptDate:	2020-08-12		
TestDate:	2020-09-04 to 2020-09-04		
Issue Date:	2020-12-21		
Test Result:	Pass		

Prepared By:	**Reviewed By:**	**Approved By:**
Test Engineer	Technical Manager	Manager
Yi'e Jiang		

GUANGZHOU GRG METROLOGY & TEST CO., LTD. GRGTEST APPROVED(03)

Other Aspects:

Note:Note

Abbreviations: *ok / P = passed; fail / F = failed; n.a. / N = not applicable;*

The test result in this test report refers exclusively to the presented test sample. This report shall not be reproduced except in full, without the written approval of GRGT.

DIRECTIONS OF TEST

1. **This station carries out test task according to the national regulation of verifications which can be traced to National Primary Standards and BIPM.**

2. **The test report merely corresponds to the test sample. It is not permitted to copy extracts of these test result without the written permission of the test laboratory.**

3. **If there is any objection concerning the test, the client should inform the laboratory within 15 days from the date of receiving the test report.**

TABLE OF CONTENTS

1. TEST RESULT SUMMARY 3

2. GENERAL DESCRIPTION OF EUT 4

2.1 APPLICANT 4
2.2 MANUFACTURER 4
2.3 FACTORY 4
2.4 BASIC DESCRIPTION OF EQUIPMENT UNDER TEST 4
2.5 TEST OPERATION MODE 5
2.6 LOCAL SUPPORTIVE 5
2.7 TEST SOFTWARE 5

3. LABORATORY AND ACCREDITATIONS 6

3.1 LABORATORY 6
3.2 ACCREDITATIONS 6
3.3 MEASUREMENT UNCERTAINTY 6

4. LIST OF USED TEST EQUIPMENT AT GRGT 7

5. CONDUCTED EMISSION MEASUREMENT 8

5.1 LIMITS 8
5.2 TEST PROCEDURES 8
5.3 TEST SETUP 9
5.4 DATA SAMPLE 9
5.5 TEST RESULTS 10

6. IN BAND AND OUT BAND RADIATED SPURIOUS EMISSIONS 12

6.1 LIMITS 12
6.2 TEST PROCEDURES 12
6.3 MEASURING INSTRUMENTS SETTING 14
6.4 TEST SETUP 14
6.5 DATA SAMPLE 15
6.6 TEST RESULTS 16
6.6.1 IN BAND RADIATED SPURIOUS EMISSIONS 16
6.6.2 OUT BAND RADIATED SPURIOUS EMISSIONS 18

7. 20DB BANDWIDTH 22

7.1 LIMITS 22
7.2 TEST PROCEDURES 22
7.3 TEST SETUP 22
7.4 TEST RESULTS 23

8. FREQUENCY TOLERANCE (TEMPERATURE VARIATION AND VOLTAGE VARIATION) 24

8.1 LIMITS 24
8.2 TEST PROCEDURES 24
8.3 TEST SETUP 24
8.4 TEST RESULTS 25

1. TEST RESULT SUMMARY

Technical Requirements			
FCC Part 15 Subpart C (15.225)			
Limit / Severity	**Item**	**Test Limit**	**Result**
§15.225(a)	In-Band Emission	15,848uV/m@30m 13.553 to 13.567MHz	Complied
2.1049	20dB Bandwidth	N/A	Complied
§15.225(b)	In-Band Emission	334uV/m@30m 13.410 to 13.553MHz 13.567 to 13.710MHz	Complied
§15.225(c)	In-Band Emission	106uV/m@30m 13.110 to 13.410 13.710 to 14.010	Complied
§15.225(d) §15.209	Out-of-Band Emission	Emission outside of the specified band (13.110 to 14.010MHz) must meet the radiated limits detailed in 15.209	Complied
§15.225(e)	Frequency Stability Tolerance	±0.01% of operating frequency	Complied
15.207	AC Conducted Emission 150KHz	< FCC.15.207 limits	Complied

2. GENERAL DESCRIPTION OF EUT

2.1 APPLICANT

Name: By TechDesign SL

Address: Calle Thomas Edison 5, Arganda del Rey Madrid, 28500, Spain

2.2 MANUFACTURER

Name: By TechDesign SL

Address: Calle Thomas Edison 5, Arganda del Rey Madrid, 28500, Spain

2.3 FACTORY

Name : By TechDesign SL

Address : Calle Thomas Edison 5, Arganda del Rey Madrid, 28500, Spain

2.4 BASIC DESCRIPTION OF EQUIPMENT UNDER TEST

Equipment: Access Control System - RF readers

Model No.: 42553

Adding Model: 42554, 42427, 42587, 42588

Model Difference:

Type	Power supply and input /output	Difference
Run	SDU or SUD+ for NÜO Run: Input: 24VDC, 2.0W	All models are same included the hardware and software, except of the exterior's color and the model name.

Trade Name: by nüo

FCC ID: 2ARQ3-MTA42553

Power supply: SDU or SUD+ for NÜO Run:
Input: 24VDC, 2.0W

Frequency Range: 13.56MHz

Modulation type: ASK

Antenna Specification: PCB Antenna

Temperature Range: -10 ℃ ~ 50 ℃

Hardware Version: SWM0523_BYV3_boot_01_00_05_00_app_00_00_05_00_release_130.byfw

Software Version: SWM0523_BYV3_boot_01_00_05_00_app_00_00_05_00_release_130.byfw

Sample No: 0001

Note: /

2.5 TEST OPERATION MODE

Test Item	Mode No.	Description of the modes
Conducted Emission	1	Continuously Transmitting (13.56MHz TX)
Radiated Emission	1	Continuously Transmitting (13.56MHz TX)

2.6 LOCAL SUPPORTIVE

Name of Equipment	Manufacturer	Model	Serial Number	Note
DC Power Source	Longwei	PS-305DM	180704473	Unshielded 1.5m
/	/	/	/	/
Cable				
/	/	/	/	/
/	/	/	/	/
/	/	/	/	/

2.7 TEST SOFTWARE

Software version	Test level
/	/

3. LABORATORY AND ACCREDITATIONS

3.1 LABORATORY

The tests & measurements refer to this report were performed byShenzhenEMC Laboratory of Guangzhou GRG Metrology & Test Co,. Ltd.

Add	:	Address: No.1301 Guanguang Road Xinlan Community, Guanlan Street, Longhua District Shenzhen, 518110, People's Republic of China
P.C.	:	518000
Tel	:	0755-61180008
Fax	:	0755-61180008

3.2 ACCREDITATIONS

A2LA	Certificate Number 2861.01

3.3 MEASUREMENT UNCERTAINTY

Where relevant, the following measurement uncertainty levels have been estimated for tests performed on the EUT as specified in CISPR 16-4-2:

Measurement		Frequency	Uncertainty
Radiated Emission		9KHz – 30MHz	4.46dB
	Horizontal	30MHz～1000MHz	4.3dB
		1GHz～18GHz	5.6dB
	Vertical	30MHz～1000MHz	4.3dB
		1GHz～18GHz	5.6dB
Conduction Emission		9 kHz ~ 150 kHz	2.8 dB
		150 kHz ~ 10 MHz	2.8 dB
		10 MHz ~ 30 MHz	2.2 dB

This uncertainty represents an expanded uncertainty factor of *k*=2.

4. LIST OF USED TEST EQUIPMENT AT GRGT

Name of Equipment	Manufacturer	Model	Serial Number	Calibration Due
Conducted Emissions				
EMI TEST RECEIVER	R&S	ESCI	100783	2020/11/27
LISN(EUT)	R&S	ENV216	101543	2021/03/24
Radiated Spurious Emission&Restricted bands of operation				
Spectrum Analyzer	Agilent	N9010A	MY52221469	2020/11/18
Bilog Antenna	Schwarzbeck	VULB 9163	01279	2021/03/14
Horn Antenna	Schwarzbeck	BBHA9120D(1201)	02143	2020/12/28
Board-Band Horn Antenna	Schwarzbeck	BBHA 9170	BBHA9170-497	2020/11/30
Amplifier	Tonscend	TAP9E6343	AP20E806065	2021/06/28
Amplifier	Tonscend	TAP01018048	AP20E8060075	2021/06/28
Test S/W	Tonscend	JS36-RE/2.5.1.5		
20 dB Bandwidth				
Spectrum Analyzer	Agilent	N9010A	MY52221469	2020/11/18

5. CONDUCTED EMISSION MEASUREMENT

5.1 LIMITS

Frequency range	Limits (dBμV)	
	Quasi-peak	Average
150kHz ～ 0.5MHz	66～56	56～46
0.5 MHz ～ 5 MHz	56	46
5 MHz ～ 30 MHz	60	50

NOTE: (1) The lower limit shall apply at the transition frequencies.
(2) The limit decreases in line with the logarithm of the frequency in the range of 150 kHz to 0.5MHz.

5.2 TEST PROCEDURES

Procedure of Preliminary Test

Test procedures follow ANSI C63.4:2014.
For measurement of the disturbance voltage the equipment under test (EUT) is connected to the power supply mains and any other extended network via one or more artificial network(s). An EUT, whether intended to be grounded or not, and which is to be used on a table is configured as follows:
– Either the bottom or the rear of the EUT shall be at a controlled distance of 40 cm from a reference ground plane. This ground plane is normally the wall or floor of a shielded room. It may also be a grounded metal plane of at least 2 m by 2 m. This is physically accomplished as follows:
1) place the EUT on a table of non-conducting material which is at least 80 cm high. Place the EUT so that it is 40 cm from the wall of the shielded room, or
2) place the EUT on a table of non-conducting material which is 40 cm high so that the bottom of the EUT is 40 cm above the ground plane;
– All other conductive surfaces of the EUT shall be at least 80 cm from the reference ground plane;
– The EUT are placed on the floor that one side of the housings is 40 cm from the vertical reference ground plane and other metallic parts;
– Interconnecting cables that hang closer than 40 cm to the ground plane shall be folded back and forth forming a bundle 30 cm to 40 cm long, hanging approximately in the middle between the ground plane and the table.
– I/O cables that are connected to a peripheral shall be bundled in the centre. The end of the cable may be terminated if required using correct terminating impedance. The total length shall not exceed 1 m.
The test mode(s) described in Item 2.4 were scanned during the preliminary test. After the preliminary scan, we found the test mode described in Item 2.4 producing the highest emission level.The EUT configuration and cable configuration of the above highest emission levels were recorded for reference of the final test.

Procedure of Final Test

EUT and support equipment were set up on the test bench as per the configuration with highest emission level in the preliminary test. A scan was taken on both power lines, recording at least the six highest emissions. Emission frequency and amplitude were recorded into a computer in which correction factors were used to calculate the emission level and compare reading to the applicable limit. The test data of the worst-case condition(s) was recorded.

5.3 TEST SETUP

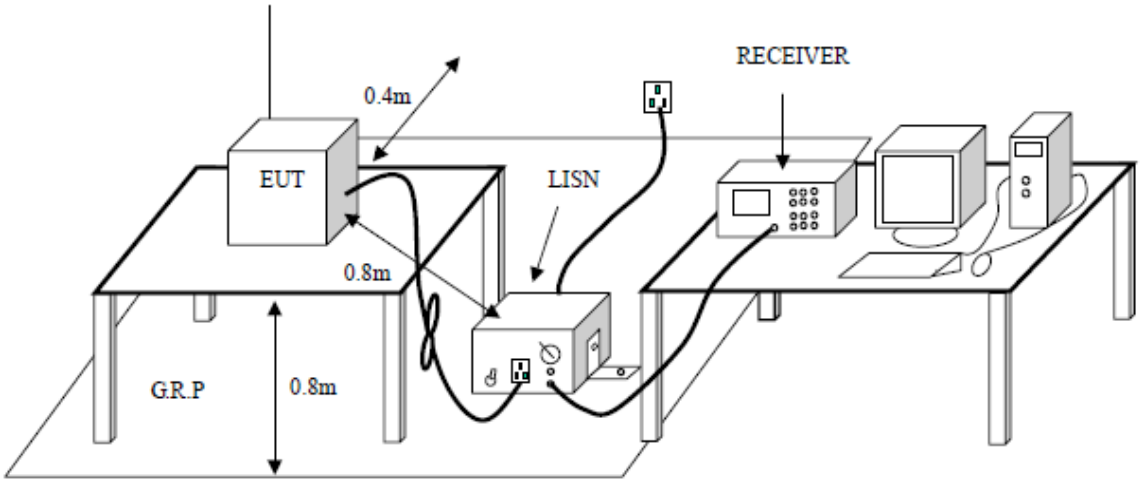

5.4 DATA SAMPLE

Frequency (MHz)	QuasiPeak Reading (dBuV)	Average Reading (dBuV)	Correction Factor (dB)	QuasiPeak Result (dBuV)	Average Result (dBuV)	QuasiPeak Limit (dBuV)	Average Limit (dBuV)	QuasiPeak Margin (dB)	Average Margin (dB)	Remark (Pass/Fail)
X.XXXX	32.69	25.65	11.52	44.21	37.17	65.78	55.79	-21.57	-18.62	Pass

Factor = Insertion loss of LISN + Cable Loss
Result = Quasi-peak Reading/ Average Reading + Factor
Limit =Limit stated in standard
Margin = Result (dBuV) – Limit (dBuV)

5.5 TEST RESULTS

Model No.	42553	**RBW,VBW**	9 kHz
Environmental Conditions	25.5(C)/44%	**Test Mode**	13.56MHz TX
Tested By	WuJunLin	**Line**	L
Tested Date	2020/08/18	**Test Voltage**	AC120V/60Hz

(The chart below shows the highest readings taken from the final data.)

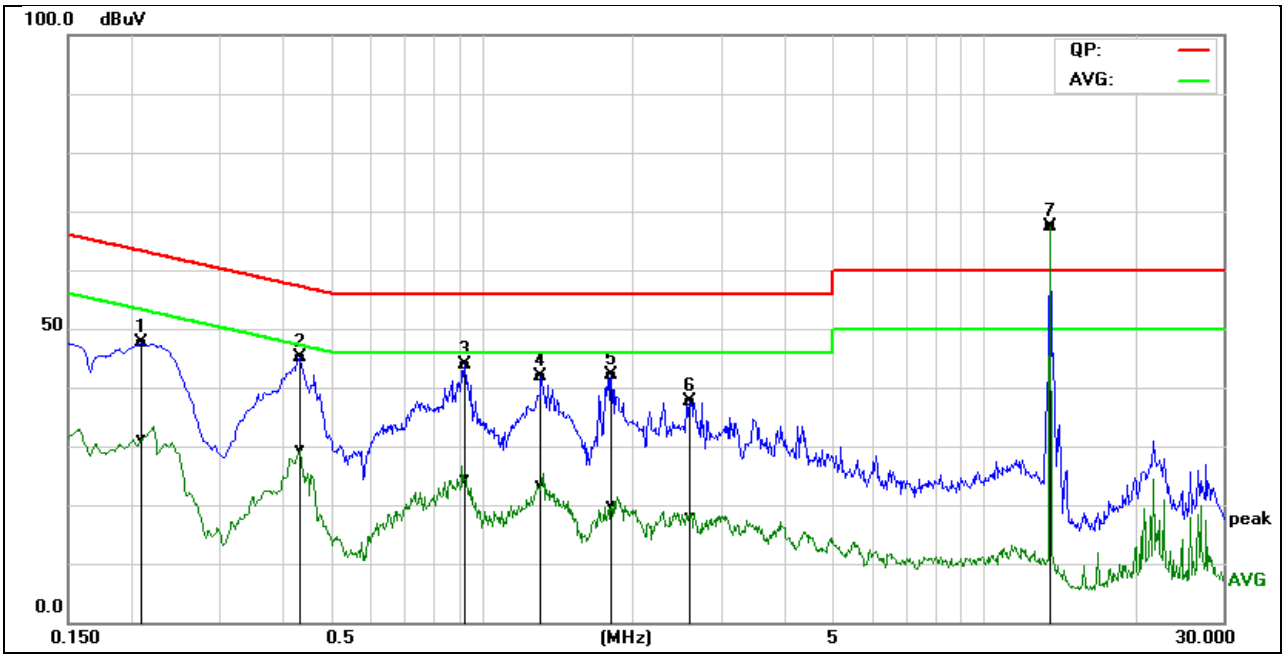

No.	Frequency	QuasiPeak reading	Average reading	Correction factor	QuasiPeak result	Average result	QuasiPeak limit	Average limit	QuasiPeak margin	Average margin	Remark
	(MHz)	(dBuV)	(dBuV)	(dB)	(dBuV)	(dBuV)	(dBuV)	(dBuV)	(dB)	(dB)	
1	0.2100	37.91	21.40	9.67	47.58	31.07	63.20	53.21	-15.62	-22.14	Pass
2	0.4340	35.39	19.77	9.67	45.06	29.44	57.18	47.18	-12.12	-17.74	Pass
3	0.9260	34.12	14.73	9.70	43.82	24.43	56.00	46.00	-12.18	-21.57	Pass
4	1.3099	32.14	13.76	9.71	41.85	23.47	56.00	46.00	-14.15	-22.53	Pass
5	1.8140	32.45	10.25	9.73	42.18	19.98	56.00	46.00	-13.82	-26.02	Pass
6	2.5980	27.98	8.22	9.75	37.73	17.97	56.00	46.00	-18.27	-28.03	Pass
7*	13.5620	57.60	57.56	9.89	67.49	67.45	60.00	50.00	7.49	17.45	Note[2]

Note: *1. L = Live Line*

2. 13.5620MHz is the fundamental, Its limit is controlled to the standard of Radio frequency.

Model No.	42553	**RBW,VBW**	9 kHz
Environmental Conditions	25.5(C)/44%	**Test Mode**	13.56MHz TX
Tested By	WuJunLin	**Line**	N
Tested Date	2020/08/18	**Test Voltage**	AC120V/60Hz

(The chart below shows the highest readings taken from the final data.)

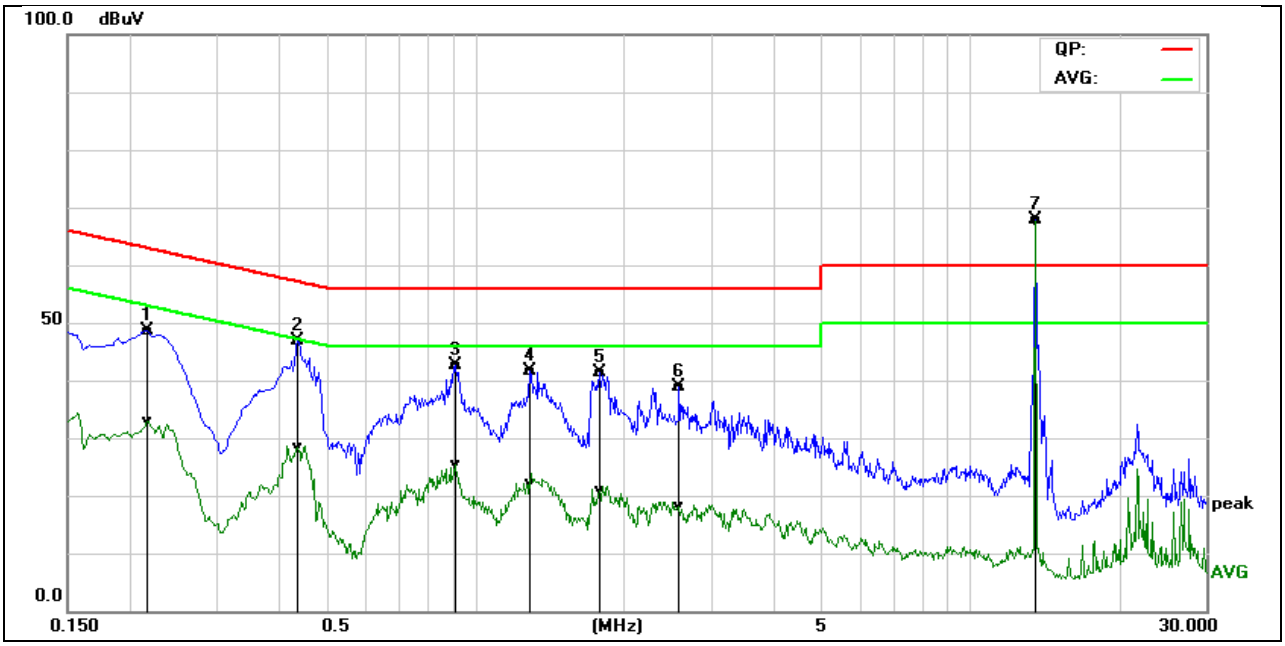

No.	Frequency	QuasiPeak reading	Average reading	Correction factor	QuasiPeak result	Average result	QuasiPeak limit	Average limit	QuasiPeak margin	Average margin	Remark
	(MHz)	(dBuV)	(dBuV)	(dB)	(dBuV)	(dBuV)	(dBuV)	(dBuV)	(dB)	(dB)	
1	0.2180	39.02	23.24	9.67	48.69	32.91	62.89	52.89	-14.20	-19.98	Pass
2	0.4380	37.15	18.65	9.67	46.82	28.32	57.10	47.10	-10.28	-18.78	Pass
3	0.9100	32.86	15.74	9.69	42.55	25.43	56.00	46.00	-13.45	-20.57	Pass
4	1.2940	31.97	12.34	9.71	41.68	22.05	56.00	46.00	-14.32	-23.95	Pass
5	1.7900	31.65	11.03	9.73	41.38	20.76	56.00	46.00	-14.62	-25.24	Pass
6	2.5860	29.10	8.29	9.75	38.85	18.04	56.00	46.00	-17.15	-27.96	Pass
7*	13.5620	57.87	57.84	9.89	67.76	67.73	60.00	50.00	7.76	17.73	Note[2]

Note: *1. N = Neutral Line.*

2. 13.5620MHz is the fundamental, Its limit is controlled to the standard of Radio frequency.

6. IN BAND AND OUT BAND RADIATED SPURIOUS EMISSIONS

6.1 LIMITS

IN BAND SPURIOUS EMISSIONS
(a) The field strength of any emissions within the band 13.553-13.567 MHz shall not exceed 15,848 microvolts/meter at 30 meters.
(b) Within the bands 13.410-13.553 MHz and 13.567-13.710 MHz, the field strength of any emissions shall not exceed 334 microvolts/meter at 30 meters.
(c) Within the bands 13.110-13.410 MHz and 13.710-14.010 MHz the field strength of any emissions shall not exceed 106 microvolts/meter at 30 meters.

OUT BAND RADIATED SPURIOUS EMISSIONS

Frequency (MHz)	Quasi-peak(μV/m)	Measurement distance(m)	Quasi-peak(dBμV/m)@distance 3m
0.009-0.490	2400/F(kHz)	300	53.8~88.5
0.490-1.705	24000/F(kHz)	30	43~53.8
1.705-30.0	30	30	49.5
30 ~ 88	100	3	40
88~216	150	3	43.5
216 ~ 960	200	3	46
Above 960	500	3	54

NOTE: (1) The lower limit shall apply at the transition frequencies.

6.2 TEST PROCEDURES

1) Sequence of testing 9 kHz to 30 MHz

Setup:

--- The equipment was set up to simulate a typical usage like described in the user manual or described by manufacturer.

--- If the EUT is a tabletop system, a rotatable table with 0.8 m height is used.

--- If the EUT is a floor standing device, it is placed on the ground.

--- Auxiliary equipment and cables were positioned to simulate normal operation conditions.

--- The AC power port of the EUT (if available) is connected to a power outlet below the turntable.

--- The measurement distance is 3 meter.

--- The EUT was set into operation.

Pre measurement:

--- The turntable rotates from 0 °to 315 °using 45 °steps.

--- The antenna height is 0.8 meter.

--- At each turntable position the analyzer sweeps with peak detection to find the maximum of all emissions

Final measurement:

--- Identified emissions during the pre measurement the software maximizes by rotating the turntable position (0 °to 360 °) and by rotating the elevation axes (0 °to 360 °).

--- The final measurement will be done in the position (turntable and elevation) causing the highest emissions with QPK detector.

--- The final levels, frequency, measuring time, bandwidth, turntable position, correction factor, margin to the limit and limit will be recorded. Also a plot with the graph of the pre measurement and the limit will be stored.

2) Sequence of testing 30 MHz to 1 GHz

Setup:

--- The equipment was set up to simulate a typical usage like described in the user manual or described by manufacturer.

--- If the EUT is a tabletop system, a table with 0.8 m height is used, which is placed on the ground plane.

--- If the EUT is a floor standing device, it is placed on the ground plane with insulation between both.

--- Auxiliary equipment and cables were positioned to simulate normal operation conditions

--- The AC power port of the EUT (if available) is connected to a power outlet below the turntable.

--- The measurement distance is 3 meter.

--- The EUT was set into operation.

Pre measurement:

--- The turntable rotates from 0 °to 315 °using 45 °steps.

--- The antenna is polarized vertical and horizontal.

--- The antenna height changes from 1 to 3 meter.

--- At each turntable position, antenna polarization and height the analyzer sweeps three times in peak to find the maximum of all emissions.

Final measurement:

--- The final measurement will be performed with minimum the six highest peaks.

--- According to the maximum antenna and turntable positions of premeasurement the software maximize the peaks by changing turntable position (±45 °) and antenna movement between 1 and 4 meter.

--- The final measurement will be done with QP detector with an EMI receiver.

--- The final levels, frequency, measuring time, bandwidth, antenna height, antenna polarization, turntable angle, correction factor, margin to the limit and limit will be recorded. Also a plot with the graph of the premeasurement with marked maximum final measurements and the limit will be stored.

6.3 MEASURING INSTRUMENTS SETTING

Frequency (MHz)	Instrument	Detector	Resolution Bandwidth	Video Bandwidth
0.009 to 30	Receiver	QP	200Hz: 0.009 to 0.15MHz 10KHz: 0.15 to 30MHz	N/A
30 to 1000	Receiver	QP	120KHz	N/A

6.4 TEST SETUP

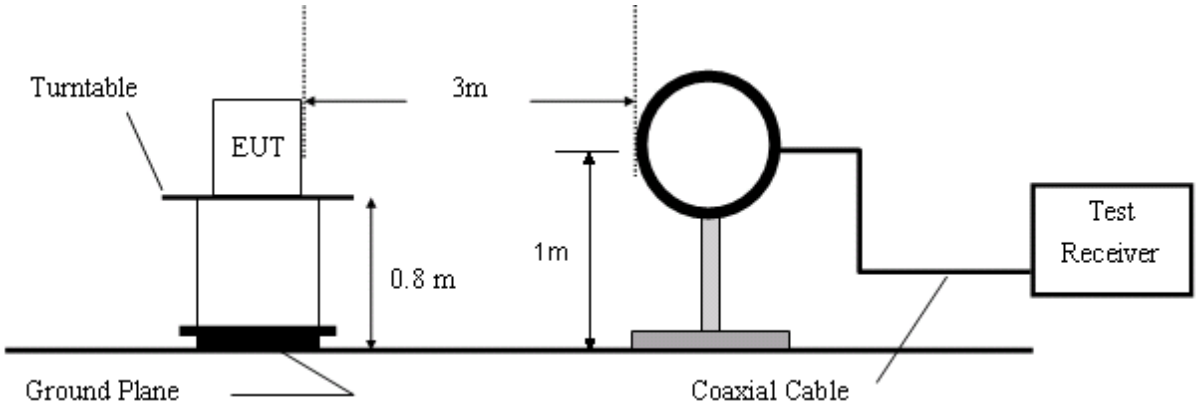

Figure 1. 9KHz to 30MHz radiated emissions test configuration

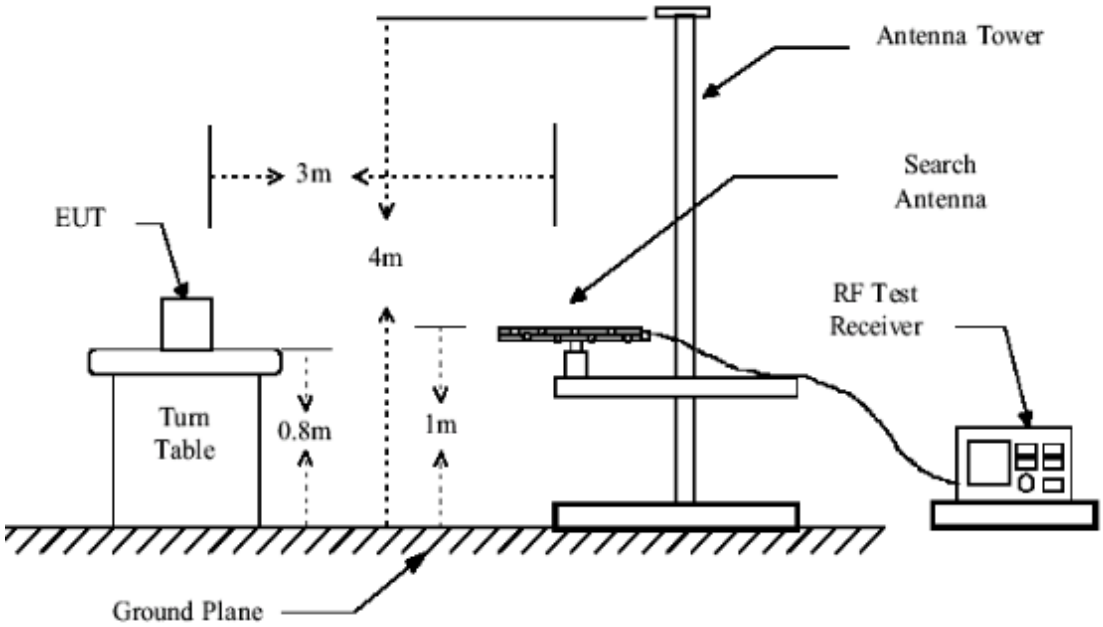

Figure 2. 30MHz to 1GHz radiated emissions test configuration

6.5 DATA SAMPLE

0.009MHz to 1GHz

No.	Frequency (MHz)	Reading (dBuV/m)	Correct Factor(dB/m)	Result (dBuV/m)	Limit (dBuV/m)	Margin (dB)	Remark	Pole
xxx	xxx	37.06	-15.48	21.58	40.00	-18.42	QP	Vertical

Frequency (MHz) = Emission frequency in MHz

Ant.Pol. (H/V) = Antenna polarization

Reading (dBuV) = Uncorrected Analyzer / Receiver reading

Correction Factor (dB/m) = Antenna factor + Cable loss – Amplifier gain

Result (dBuV/m) = Reading (dBuV) + Correction Factor (dB/m)

Limit (dBuV/m) = Limit stated in standard

Margin (dB) = Remark Result (dBuV/m) – Limit (dBuV/m)

QP = Quasi-peak Reading

6.6 TEST RESULTS

6.6.1 IN BAND RADIATED SPURIOUS EMISSIONS

Project Information			
Application No.:	E202008101990	EUT:	Access Control System - RF readers 4
Model:	42553	SN:	0001
Mode:	NFC 13.56MHz TX	Voltage:	DC 24V
Environment:	Temp: 25℃; Humi:60%	Engineer:	Zheng jinliang
Remark:	0		

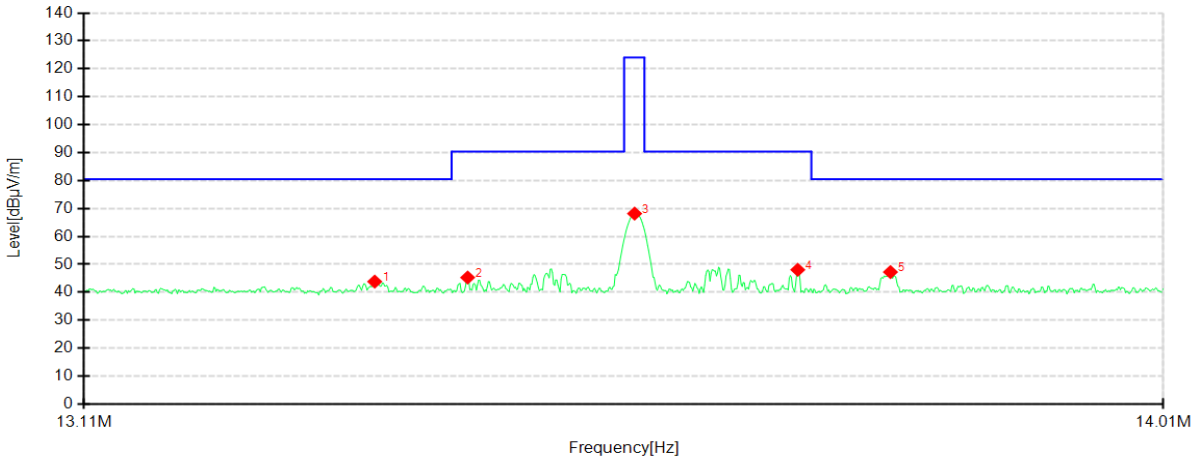

Suspected Data List										
NO.	Freq. [MHz]	Reading[dBµV/m]	Level [dBµV/m]	Factor [dB]	Limit [dBµV/m]	Margin [dB]	Trace	Height [cm]	Angle [°]	Polarity
1	13.346	22.96	43.83	20.87	80.51	36.68	PK	100	146	0
2	13.423	24.40	45.29	20.89	90.40	45.11	PK	100	188	0
3	13.561	47.25	68.17	20.92	124.00	55.83	PK	100	357	0
4	13.698	27.09	48.05	20.96	90.40	42.35	PK	100	186	0
5	13.776	26.27	47.25	20.98	80.51	33.26	PK	100	178	0

Remark:

1 Data of measurement within this frequency range in the table above the reading of PK detector are more 6dB than QP limit, therefore it's unnecessary to performed QP scan.

Project Information			
Application No.:	E202008101990	EUT:	Access Control System - RF readers 4
Model:	42553	SN:	0001
Mode:	NFC 13.56MHz TX	Voltage:	DC 24V
Environment:	Temp: 25℃; Humi:60%	Engineer:	Zheng jinliang
Remark:	90		

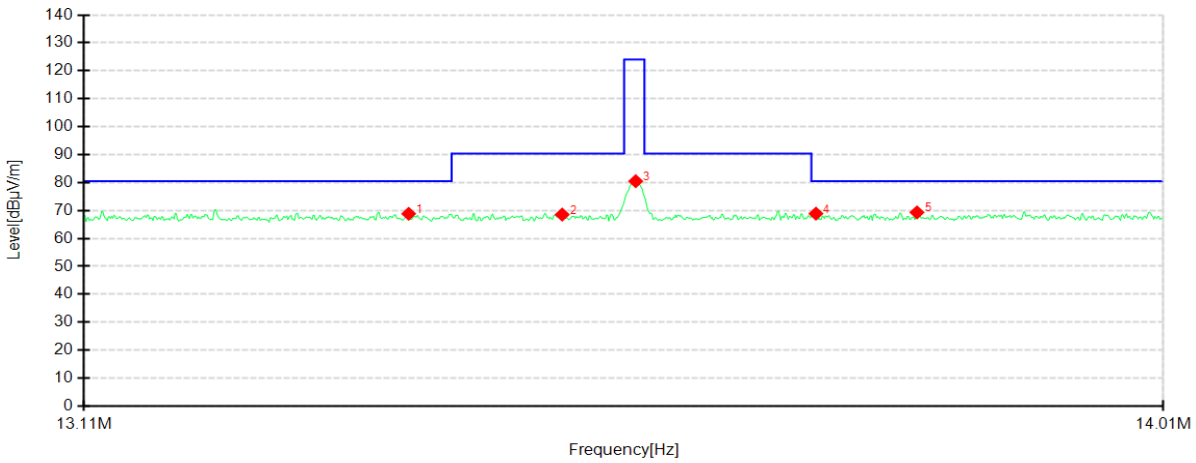

Suspected Data List										
NO.	Freq. [MHz]	Reading[dBµV/m]	Level [dBµV/m]	Factor [dB]	Limit [dBµV/m]	Margin [dB]	Trace	Height [cm]	Angle [°]	Polarity
1	13.374	47.93	68.81	20.88	80.51	11.70	PK	100	3	90
2	13.501	47.62	68.53	20.91	90.40	21.87	PK	100	212	90
3	13.562	59.56	80.48	20.92	124.00	43.52	PK	100	65	90
4	13.713	47.91	68.87	20.96	80.51	11.64	PK	100	42	90
5	13.799	48.34	69.32	20.98	80.51	11.19	PK	100	102	90

Remark:

1 Data of measurement within this frequency range in the table above the reading of PK detector are more 6dB than QP limit, therefore it's unnecessary to performed QP scan.

6.6.2 OUT BAND RADIATED SPURIOUS EMISSIONS

Project Information			
Application No.:	E202008101990	EUT:	Access Control System - RF readers 4
Model:	42553	SN:	0001
Mode:	NFC 13.56MHz TX	Voltage:	DC 24V
Environment:	Temp: 25℃; Humi:60%	Engineer:	Zheng jinliang
Remark:	0		

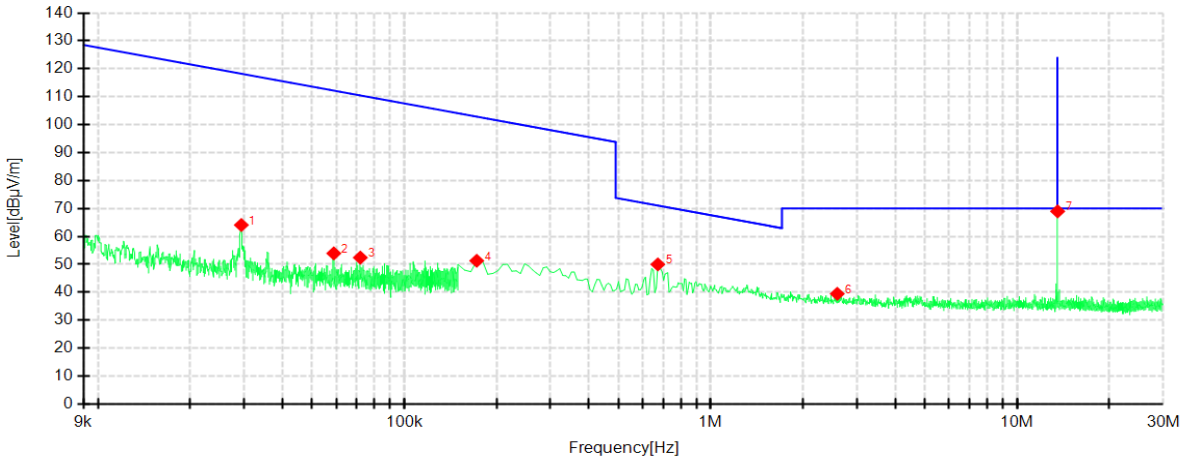

Suspected Data List										
NO.	Freq. [MHz]	Reading[dBµV/m]	Level [dBµV/m]	Factor [dB]	Limit [dBµV/m]	Margin [dB]	Trace	Height [cm]	Angle [°]	Polarity
1	0.0294	44.28	64.09	19.81	118.25	54.16	PK	100	91	0
2	0.0589	34.11	53.94	19.83	112.21	58.27	PK	100	185	0
3	0.0719	32.45	52.41	19.96	110.48	58.07	PK	100	60	0
4	0.1724	31.83	51.29	19.46	102.87	51.58	PK	100	41	0
5	0.6724	29.92	49.99	20.07	71.06	21.07	PK	100	98	0
6	2.5902	18.71	39.47	20.76	70.00	30.53	PK	100	25	0
7	13.567	48.04	68.97	20.93	124.00	55.03	PK	100	357	0

Remark:

1 Data of measurement within this frequency range in the table above the reading of PK detector are more 6dB than QP limit, therefore it's unnecessary to performed QP scan.

Project Information			
Application No.:	E202008101990	EUT:	Access Control System - RF readers 4
Model:	42553	SN:	0001
Mode:	NFC 13.56MHz TX	Voltage:	DC 24V
Environment:	Temp: 25℃; Humi:60%	Engineer:	Zheng jinliang
Remark:	90		

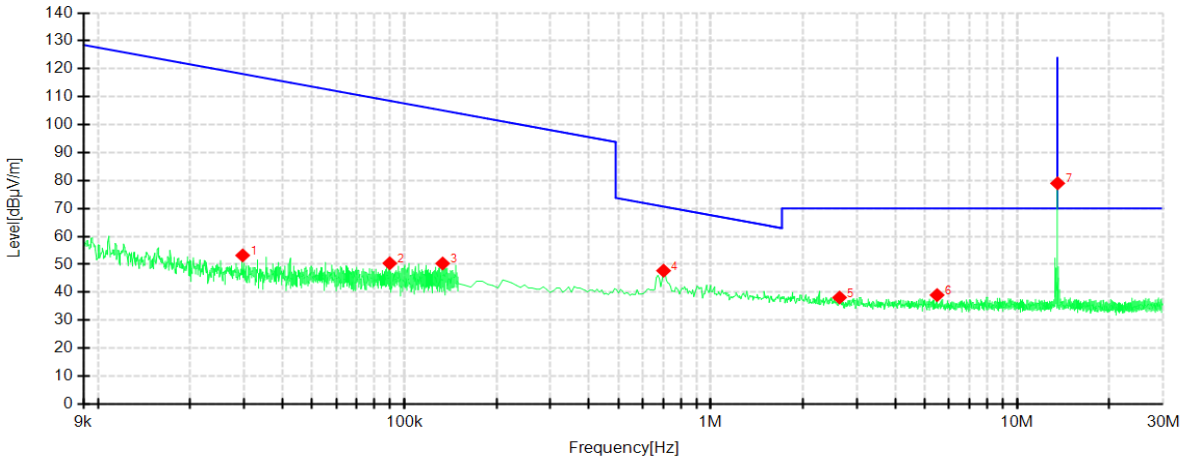

Suspected Data List										
NO.	Freq. [MHz]	Reading[dBµV/m]	Level [dBµV/m]	Factor [dB]	Limit [dBµV/m]	Margin [dB]	Trace	Height [cm]	Angle [°]	Polarity
1	0.0297	33.39	53.21	19.82	118.16	64.95	PK	100	92	Vertical
2	0.0897	30.54	50.40	19.86	108.55	58.15	PK	100	282	Vertical
3	0.1335	30.75	50.32	19.57	105.09	54.77	PK	100	252	Vertical
4	0.7022	27.57	47.73	20.16	70.68	22.95	PK	100	22	Vertical
5	2.6350	17.36	38.12	20.76	70.00	31.88	PK	100	288	Vertical
6	5.4857	18.31	39.00	20.69	70.00	31.00	PK	100	78	Vertical
7	13.567	58.08	79.01	20.93	124.00	44.99	PK	100	56	Vertical

Remark:

1 Data of measurement within this frequency range in the table above the reading of PK detector are more 6dB than QP limit, therefore it's unnecessary to performed QP scan.

Project Information			
Application No.:	E202008101990	EUT:	Access Control System - RF readers 4
Model:	42553	SN:	0001
Mode:	NFC 13.56MHz TX	Voltage:	DC 24V
Environment:	Temp: 25℃; Humi:60%	Engineer:	Zheng jinliang
Remark:	Horizontal		

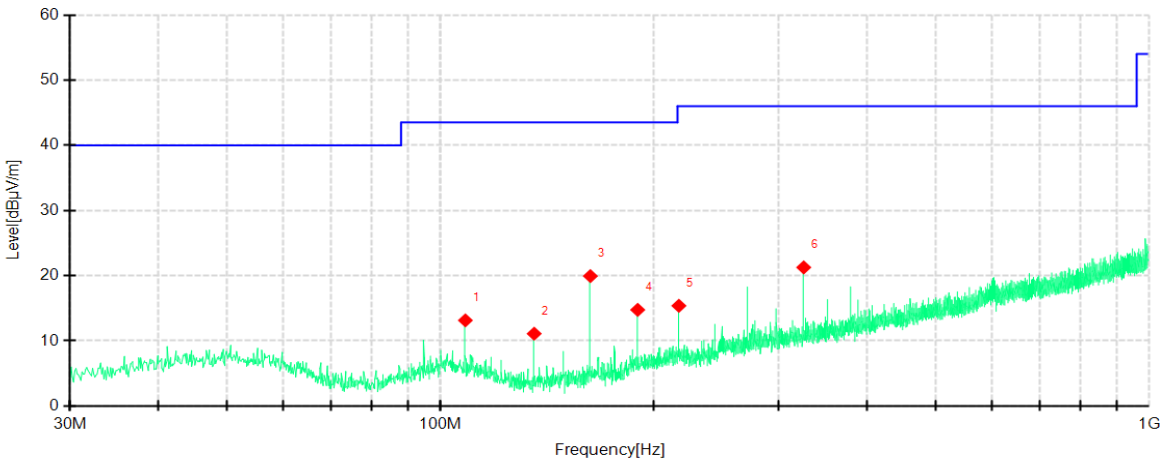

Suspected Data List										
NO.	Freq. [MHz]	Reading[dBµV/m]	Level [dBµV/m]	Factor [dB]	Limit [dBµV/m]	Margin [dB]	Trace	Height [cm]	Angle [°]	Polarity
1	108.44	43.32	13.14	-30.18	43.50	30.36	PK	100	338	Horizontal
2	135.60	43.94	11.10	-32.84	43.50	32.40	PK	100	112	Horizontal
3	162.76	52.05	19.94	-32.11	43.50	23.56	PK	100	94	Horizontal
4	189.80	44.45	14.76	-29.69	43.50	28.74	PK	100	97	Horizontal
5	216.96	44.21	15.38	-28.83	46.00	30.62	PK	100	315	Horizontal
6	325.48	47.09	21.27	-25.82	46.00	24.73	PK	100	285	Horizontal

Remark:

1 Data of measurement within this frequency range in the table above the reading of PK detector are more 6dB than QP limit, therefore it's unnecessary to performed QP scan.

Project Information			
Application No.:	E202008101990	EUT:	Access Control System - RF readers 4
Model:	42553	SN:	0001
Mode:	NFC 13.56MHz TX	Voltage:	DC 24V
Environment:	Temp: 25℃; Humi:60%	Engineer:	Zheng jinliang
Remark:	Vertical		

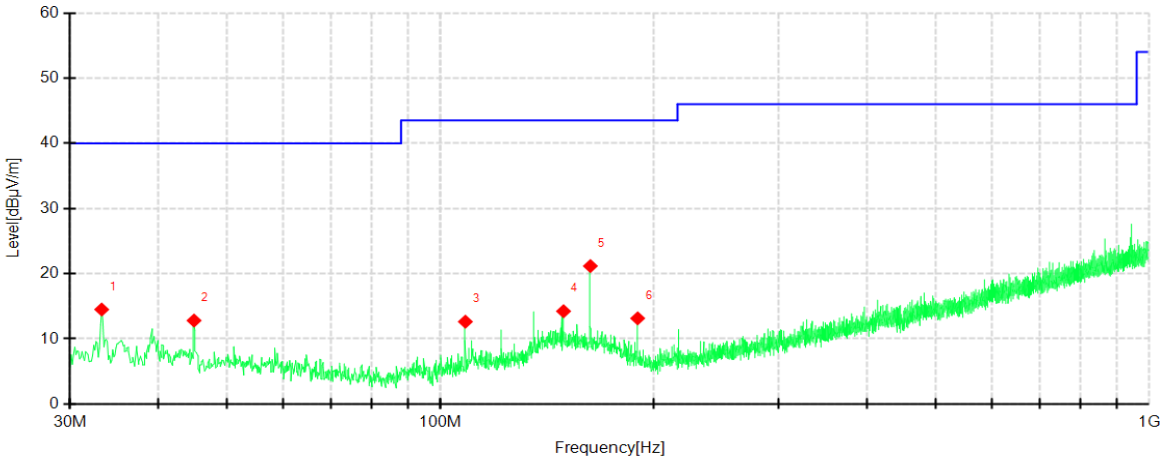

Suspected Data List										
NO.	Freq. [MHz]	Reading[dBμV/m]	Level [dBμV/m]	Factor [dB]	Limit [dBμV/m]	Margin [dB]	Trace	Height [cm]	Angle [°]	Polarity
1	33.273	44.77	14.50	-30.27	40.00	25.50	PK	100	156	Vertical
2	44.913	42.79	12.81	-29.98	40.00	27.19	PK	100	360	Vertical
3	108.44	43.45	12.63	-30.82	43.50	30.87	PK	100	275	Vertical
4	149.18	40.94	14.24	-26.70	43.50	29.26	PK	100	252	Vertical
5	162.76	48.47	21.17	-27.30	43.50	22.33	PK	100	240	Vertical
6	189.80	42.49	13.15	-29.34	43.50	30.35	PK	100	297	Vertical

Remark:

1 Data of measurement within this frequency range in the table above the reading of PK detector are more 6dB than QP limit, therefore it's unnecessary to performed QP scan.

7. 20dB BANDWIDTH

7.1 LIMITS

N/A

7.2 TEST PROCEDURES

1) The equipment was set up to simulate a typical usage like described in the user manual or described by manufacturer.
2) If the EUT is a tabletop system, a rotatable table with 0.8 m height is used.
3) If the EUT is a floor standing device, it is placed on the ground.
4) Auxiliary equipment and cables were positioned to simulate normal operation conditions.
5) The AC power port of the EUT (if available) is connected to a power outlet below the turntable.
6) The measurement distance is 3 meter.
7) The EUT was set into operation.
8) Adjust the test instrument for the following setting

RBW: 1% to 5% of the Necessary bandwidth
VBW: at least 3 times of the RBW
Detector: Peak
Sweep time: Auto
Trace Mode: Max hold

9) Allow trace to fully stabilize

7.3 TEST SETUP

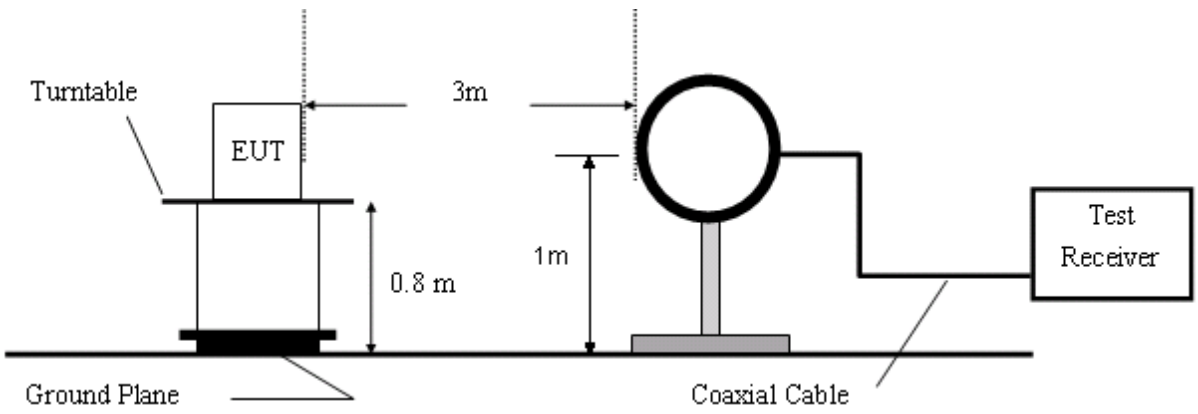

7.4 TEST RESULTS

Frequency (MHz)	Bandwidth (KHz)	limit	Test Result
13.56	2.521	N/A	Complied

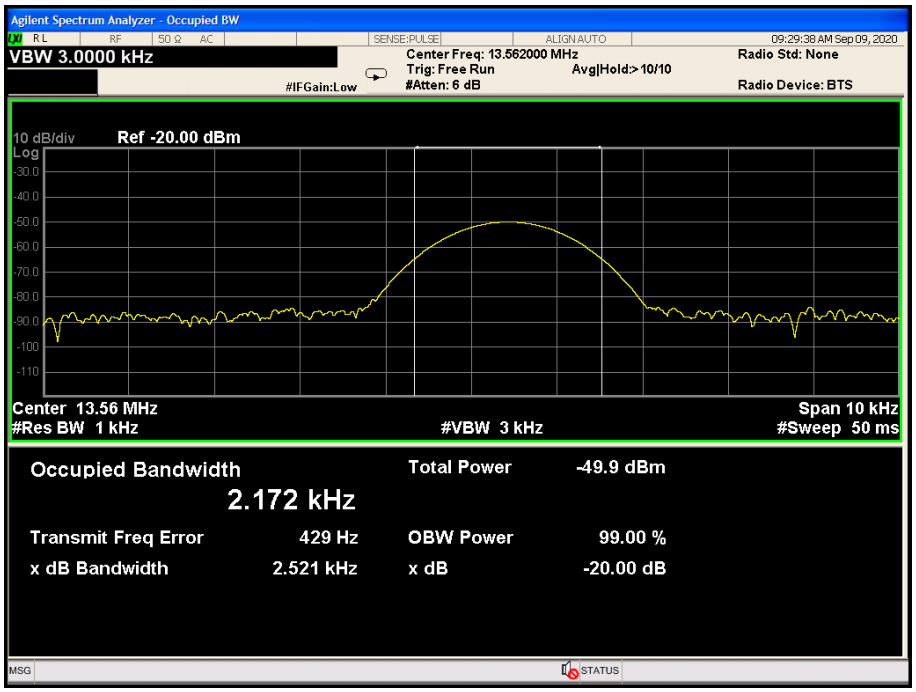

8. FREQUENCY TOLERANCE (TEMPERATURE VARIATION AND VOLTAGE VARIATION)

8.1 LIMITS

The frequency tolerance of the carrier signal shall be maintained within ±0.01% of operating frequency over a temperature variation of -20degrees to +50 degrees C at normal supply voltage , and for a variation in the primary supply voltage from 85% to 115% of the rated supply voltage at a temperature of 20 degrees C. For battery operated equipment, the equipment tests shall be performed using a new battery.

8.2 TEST PROCEDURES

Frequency tolerance (Temperature variation)

1) The EUT and test equipment were setup as shown on the following page.
2) Set the temperature -20 degrees C.
3) Leave the EUT for 1 hour after it become the temperature that was setup.
4) Setup the EUT to transmitting.
5) Measure the transmitting frequency (startup, 2min, 5min and 10min).
6) Set the temperature -20 degrees C to +50 degrees C.
7) Repeat test procedure the step 4 to 6, and record the test data after the testing finished.

Frequency tolerance (Voltage variation)

1) The EUT and test equipment (set the supply voltage 100%) were setup as shown on the following page.
2) Set the temperature -20 degrees C.
3) Leave the EUT for 1 hour after it become the temperature that was setup.
4) Setup the EUT to transmitting.
5) Measure the transmitting frequency.
6) Set the supply voltage 85% and 115%
7) Repeat test procedure the step 4 to 6, and record the test data after the testing finished.

8.3 TEST SETUP

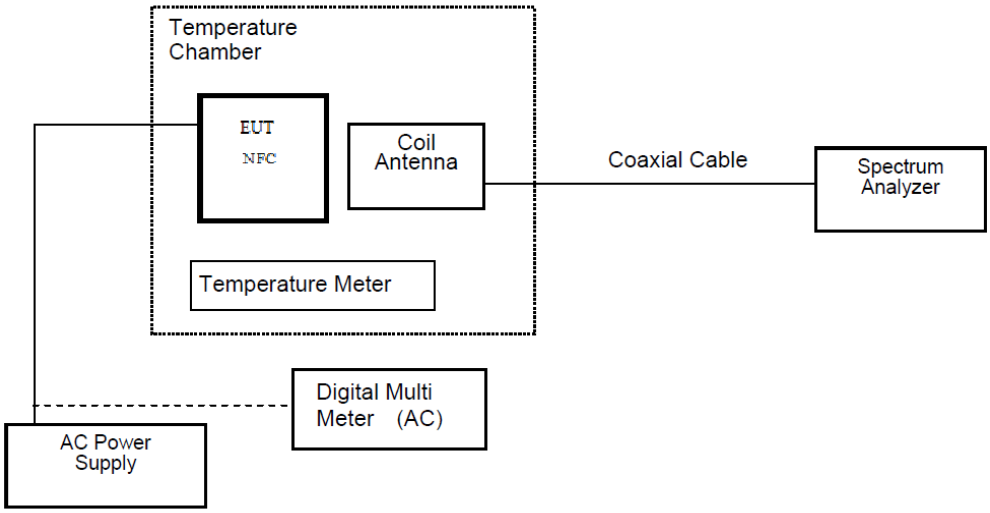

8.4 TEST RESULTS

Temperature Variation

Transmitting Frequency (MHz)	Temperature (Degree C)	Voltage (%)	Frequency (MHz)	Deviation (ppm)	Limit (±) (ppm)
13.56MHz	-20	100	13.5588488	84.9	100.0
	-10	100	13.5590291	71.6	100.0
	0	100	13.5590481	70.2	100.0
	10	100	13.5591389	63.5	100.0
	20	100	13.5591756	60.8	100.0
	30	100	13.5591905	59.7	100.0
	40	100	13.5591945	59.4	100.0
	50	100	13.5591403	63.4	100.0

Frequency tolerance (Voltage variation)

Remark: The voltage of the EUT is DC24V, 0.1A supplied by SDU or SDU+ which connect to NÜO DC GO! 8 after voltage stabilization, therefore the voltage variation is unnecessary to perform.

----------This is the last page of the report. ----------