BA01854T/09/EN/02.18
71424899
2018-12-03

Valid as of version
01.01 (device version)

Operating Instructions
iTEMP TMT72

Temperature transmitter

HART COMMUNICATION PROTOCOL

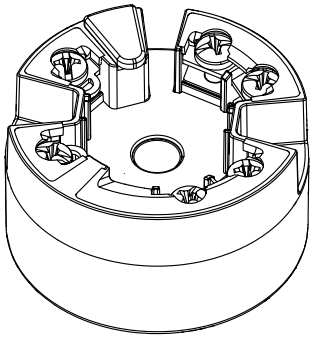

Endress+Hauser
People for Process Automation

Table of contents

1 About this document 4
1.1 Document function 4
1.2 Safety Instructions (XA) 4
1.3 Symbols used 4
1.4 Tool symbols 6
1.5 Documentation 6
1.6 Registered trademarks 6

2 Basic safety instructions 7
2.1 Requirements for the personnel 7
2.2 Designated use 7
2.3 Operational safety 7

3 Incoming acceptance and product identification 8
3.1 Incoming acceptance 8
3.2 Product identification 8
3.3 Scope of delivery 9
3.4 Certificates and approvals 9
3.5 Transport and storage 9

4 Installation 10
4.1 Installation conditions 10
4.2 Installation 10
4.3 Post-installation check 14

5 Electrical connection 15
5.1 Connection conditions 15
5.2 Quick wiring guide 15
5.3 Connecting the sensor cables 15
5.4 Connecting the transmitter 16
5.5 Special connection instructions 16
5.6 Post-connection check 17

6 Operation options 18
6.1 Overview of operation options 18
6.2 Structure and function of the operating menu 21
6.3 Access to the operating menu via the operating tool 23
6.4 Access to the operating menu via the SmartBlue app 26

7 System integration 28
7.1 Overview of device description files 28
7.2 Measured variables via HART protocol 28
7.3 Supported HART® commands 28

8 Commissioning 31
8.1 Post-installation check 31
8.2 Switching on the transmitter 31
8.3 Configuring the measuring device 31
8.4 Protecting settings from unauthorized access 33

9 Diagnostics and troubleshooting . . . 35
9.1 General troubleshooting 35
9.2 Diagnostic information on local display 37
9.3 Diagnostic information via communication interface 38
9.4 Diagnostic list 38
9.5 Event logbook 38
9.6 Overview of diagnostic events 39
9.7 Firmware history 40

10 Maintenance 41

11 Repair 41
11.1 General information 41
11.2 Spare parts 41
11.3 Return 41
11.4 Disposal 41

12 Accessories 42
12.1 Device-specific accessories 42
12.2 Communication-specific accessories 42
12.3 Service-specific accessories 43
12.4 System components 44

13 Technical data 45
13.1 Input 45
13.2 Output 46
13.3 Power supply 47
13.4 Performance characteristics 48
13.5 Environment 55
13.6 Mechanical construction 56
13.7 Certificates and approvals 58
13.8 Supplementary documentation 60

14 Operating menu and parameter description 61
14.1 Menu: Diagnostics 65
14.2 Menu: Application 71
14.3 Menu: System 81

1 About this document

1.1 Document function

These Operating Instructions contain all the information that is required in various phases of the life cycle of the device: from product identification, incoming acceptance and storage, to mounting, connection, operation and commissioning through to troubleshooting, maintenance and disposal.

1.2 Safety Instructions (XA)

When using in hazardous areas, compliance with national regulations is mandatory. Separate Ex-specific documentation is provided for measuring systems that are used in hazardous areas. This documentation is an integral part of these Operating Instructions. The installation specifications, connection data and safety instructions it contains must be strictly observed! Make sure that you use the right Ex-specific documentation for the right device with approval for use in hazardous areas! The number of the specific Ex documentation (XA...) is provided on the nameplate. If the two numbers (on the Ex documentation and the nameplate) are identical, then you may use this Ex-specific documentation.

1.3 Symbols used

1.3.1 Safety symbols

Symbol	Meaning
DANGER	**DANGER!** This symbol alerts you to a dangerous situation. Failure to avoid this situation will result in serious or fatal injury.
WARNING	**WARNING!** This symbol alerts you to a dangerous situation. Failure to avoid this situation can result in serious or fatal injury.
CAUTION	**CAUTION!** This symbol alerts you to a dangerous situation. Failure to avoid this situation can result in minor or medium injury.
NOTICE	**NOTE!** This symbol contains information on procedures and other facts which do not result in personal injury.

1.3.2 Electrical symbols

Symbol	Meaning
⎓	Direct current
∼	Alternating current
≂	Direct current and alternating current

Symbol	Meaning
⏚	**Ground connection** A grounded terminal which, as far as the operator is concerned, is grounded via a grounding system.
⏚	**Protective Earth (PE)** A terminal which must be connected to ground prior to establishing any other connections. The ground terminals are situated inside and outside the device: ▪ Inner ground terminal: Connects the protectiv earth to the mains supply. ▪ Outer ground terminal: Connects the device to the plant grounding system.

1.3.3 Symbols for certain types of information

Symbol	Meaning
✓	**Permitted** Procedures, processes or actions that are permitted.
✓✓	**Preferred** Procedures, processes or actions that are preferred.
✗	**Forbidden** Procedures, processes or actions that are forbidden.
i	**Tip** Indicates additional information.
	Reference to documentation.
	Reference to page.
	Reference to graphic.
▶	Notice or individual step to be observed.
1., 2., 3....	Series of steps.
↳	Result of a step.
?	Help in the event of a problem.
	Visual inspection.

1.3.4 Symbols in graphics

Symbol	Meaning	Symbol	Meaning
1, 2, 3,...	Item numbers	1., 2., 3....	Series of steps
A, B, C, ...	Views	A-A, B-B, C-C, ...	Sections
EX	Hazardous area	EX	Safe area (non-hazardous area)

1.4 Tool symbols

Symbol	Meaning
A0011220	Flat blade screwdriver
A0011219	Phillips head screwdriver
A0011221	Allen key
A0011222	Open-ended wrench
A0013442	Torx screwdriver

1.5 Documentation

Document	Purpose and content of the document
Technical Information TI01392T/09/en	**Planning aid for your device** The document contains all the technical data on the device and provides an overview of the accessories and other products that can be ordered for the device.
Brief Operating Instructions KA01414T/09/en	**Guide that takes you quickly to the 1st measured value** The Brief Operating Instructions contain all the essential information from incoming acceptance to initial commissioning.

The document types listed are available:
In the Download Area of the Endress+Hauser Internet site: www.endress.com → Download

1.6 Registered trademarks

HART®
Registered trademark of the HART® FieldComm Group

2 Basic safety instructions

2.1 Requirements for the personnel

The personnel for installation, commissioning, diagnostics and maintenance must fulfill the following requirements:

- Trained, qualified specialists must have a relevant qualification for this specific function and task
- Are authorized by the plant owner/operator
- Are familiar with federal/national regulations
- Before beginning work, the specialist staff must have read and understood the instructions in the Operating Instructions and supplementary documentation as well as in the certificates (depending on the application)
- Following instructions and basic conditions

The operating personnel must fulfill the following requirements:

- Being instructed and authorized according to the requirements of the task by the facility's owner-operator
- Following the instructions in these Operating Instructions

2.2 Designated use

The device is a universal and user-configurable temperature transmitter with one sensor input for a resistance thermometer (RTD), thermocouples (TC), resistance and voltage transmitters. The head transmitter version of the device is intended for mounting in a terminal head (flat face) as per DIN EN 50446. It is also possible to mount the device on a DIN rail using the optional DIN rail clip.

If the equipment is used in a manner not specified by the manufacturer, the protection provided by the equipment may be impaired.

The manufacturer is not liable for damage caused by improper or non-designated use.

2.3 Operational safety

- Operate the device in proper technical condition and fail-safe condition only.
- The operator is responsible for interference-free operation of the device.

Hazardous area

To eliminate a danger for persons or for the facility when the device is used in the hazardous area (e.g. explosion protection or safety equipment):

- Based on the technical data on the nameplate, check whether the ordered device is permitted for the intended use in the hazardous area. The nameplate can be found on the side of the transmitter housing.
- Observe the specifications in the separate supplementary documentation that is an integral part of these Instructions.

Electromagnetic compatibility

The measuring system complies with the general safety requirements as per EN 61010-1, the EMC requirements as per the IEC/EN 61326 series and the NAMUR recommendations NE 21.

NOTICE

- The device must only be powered by a power unit that operates using an energy-limited electric circuit according to UL/EN/IEC 61010-1, chapter 9.4 and requirements of table 18.

3 Incoming acceptance and product identification

3.1 Incoming acceptance

1. Unpack the temperature transmitter carefully. Is the packaging or content damaged?
   ↳ Damaged components may not be installed as the manufacturer can otherwise not guarantee compliance with the original safety requirements or the material resistance, and can therefore not be held responsible for any resulting damage.
2. Is the delivery complete or is anything missing? Check the scope of delivery against your order.
3. 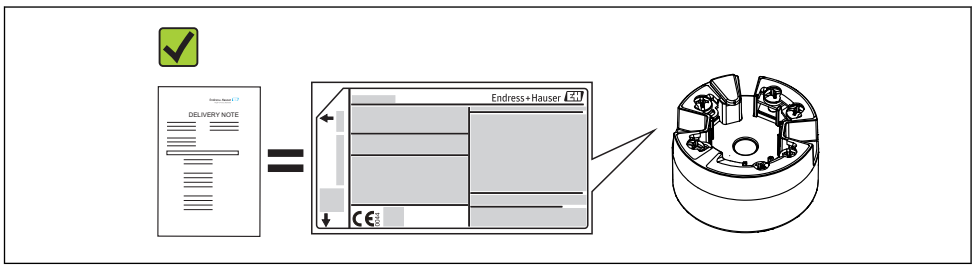

A0037102

   Does the nameplate match the ordering information on the delivery note?
4. 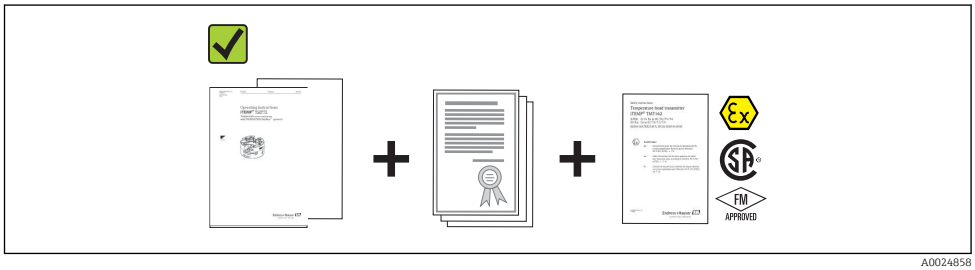

A0024858

   Are the technical documentation and all other necessary documents provided? If applicable: are the Safety Instructions (e.g. XA) for hazardous areas provided?

If one of these conditions is not satisfied, contact your Endress+Hauser Sales Center.

3.2 Product identification

The following options are available for identification of the device:
- Nameplate specifications
- Extended order code with breakdown of the device features on the delivery note
- Enter the serial number from the nameplate in the *W@M Device Viewer* www.endress.com/deviceviewer. All data relating to the device and an overview of the Technical Documentation supplied with the device are displayed.
- Enter the serial number on the nameplate into the *Endress+Hauser Operations App* or scan the 2-D matrix code (QR code) on the nameplate with the *Endress+Hauser Operations App*: all the information about the device and the technical documentation pertaining to the device is displayed.

3.2.1 Nameplate

The right device?

Compare and check the data on the nameplate of the device against the requirements of the measuring point:

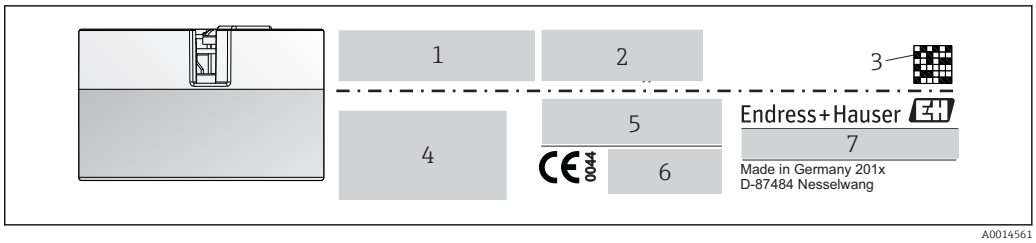

1 Nameplate of the head transmitter (example, Ex version)

1 Power supply, current consumption and radio approval (Bluetooth)
2 Serial number, device revision, firmware version and hardware version
3 Data Matrix 2D code
4 2 lines for the TAG name and extended order code
5 Approval in hazardous area with number of the relevant Ex documentation (XA...)
6 Approvals with symbols
7 Order code and manufacturer ID

3.3 Scope of delivery

The scope of delivery of the device comprises:
- Temperature transmitter
- Mounting material (head transmitter), optional
- Hard copy of multi-language Brief Operating Instructions
- Additional documentation for devices which are suitable for use in the hazardous area (Ex), such as Safety Instructions (XA...), Control or Installation Drawings (ZD...).

3.4 Certificates and approvals

The device left the factory in a safe operating condition. The device complies with the requirements of the standards EN 61 010-1 "Safety Requirements for Electrical Equipment for Measurement, Control, and Laboratory Use" and with the EMC requirements as per the IEC/EN 61326 series.

3.4.1 CE/EAC mark, declaration of conformity

The device meets the legal requirements of the EU/EEU guidelines. The manufacturer confirms that the device is compliant with the relevant guidelines by applying the CE/EAC mark.

3.4.2 HART® protocol certification

The temperature transmitter is registered by the HART® FieldComm Group. The device meets the requirements of the HART® Communication Protocol Specifications, Revision 7 (HCF 7.6).

3.5 Transport and storage

Carefully remove all the packaging material and protective covers that are part of the transported package.

Dimensions and operating conditions: → 56

When storing (and transporting) the device, pack it so that it is reliably protected against impact. The original packaging offers the best protection.

Storage temperature
Head transmitter: −50 to +100 °C (−58 to +212 °F)

4 Installation

4.1 Installation conditions

4.1.1 Dimensions

The dimensions of the device are provided in the "Technical data" section → 🗎 56.

4.1.2 Mounting location

Head transmitter:
- In the terminal head, flat face, as per DIN EN 50446, direct mounting on insert with cable entry (middle hole 7 mm)
- In the field housing, separated from the process→ 🗎 42

It is also possible to mount the head transmitter on a DIN rail as per IEC 60715 using the DIN rail clip → 🗎 42accessory.

Information about the conditions (such as the ambient temperature, degree of protection, climate class etc.) that must be present at the installation point so that the device can be mounted correctly is provided in the "Technical data" section→ 🗎 55.

When using in hazardous areas, the limit values of the certificates and approvals must be observed (see Ex Safety Instructions).

4.2 Installation

A suitable screwdriver is required to mount the head transmitter:
- Maximum torque for mounting screws = 1 Nm (¾ pound-feet), screwdriver: Pozidriv Z2
- Maximum torque for screw terminals = 0.35 Nm (¼ pound-feet), screwdriver: Pozidriv Z1

4.2.1 Mounting the head transmitter

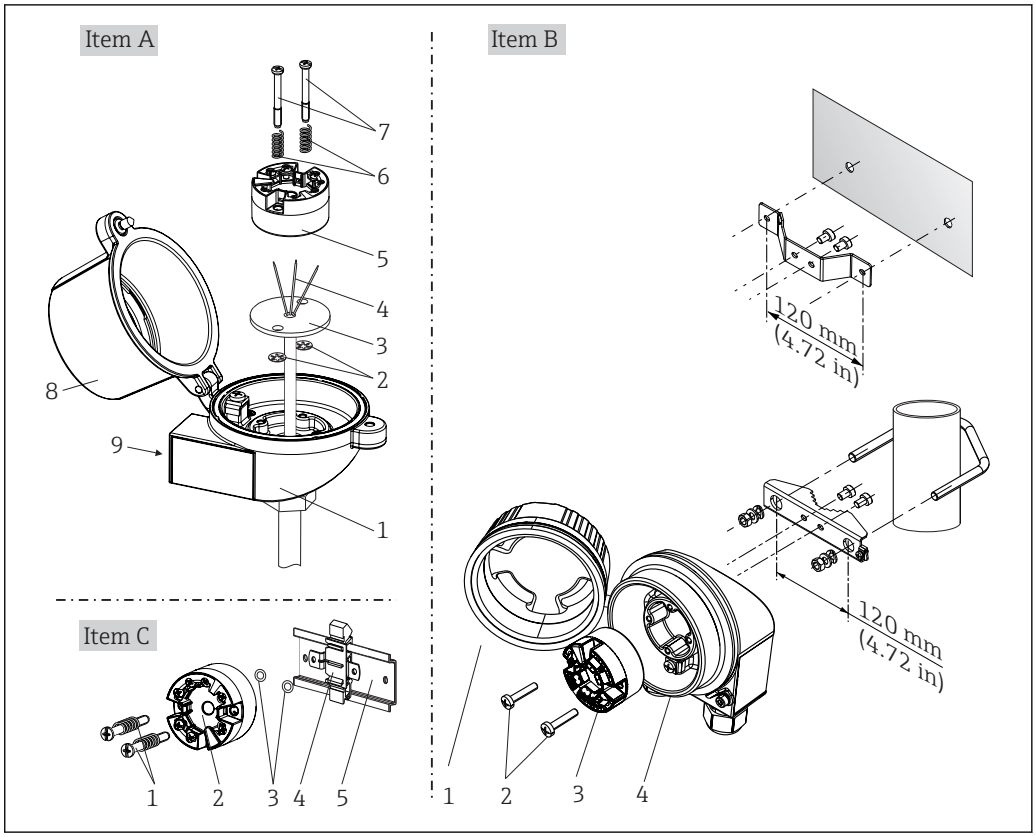

2 *Head transmitter mounting (three versions)*

Item A	Mounting in a terminal head (terminal head flat face as per DIN 43729)
1	Terminal head
2	Circlips
3	Insert
4	Connection wires
5	Head transmitter
6	Mounting springs
7	Mounting screws
8	Terminal head cover
9	Cable entry

Procedure for mounting in a terminal head, pos. A:

1. Open the terminal head cover (8) on the terminal head.
2. Guide the connection wires (4) of the insert (3) through the center hole in the head transmitter (5).
3. Fit the mounting springs (6) on the mounting screws (7).
4. Guide the mounting screws (7) through the side boreholes of the head transmitter and the insert (3). Then fix both mounting screws with the snap rings (2).
5. Then tighten the head transmitter (5) along with the insert (3) in the terminal head.
6. After wiring→ 📖 15, close the terminal head cover (8) tightly again.

Item B	Mounting in a field housing
1	Field housing cover
2	Mounting screws with springs
3	Head transmitter
5	Field housing

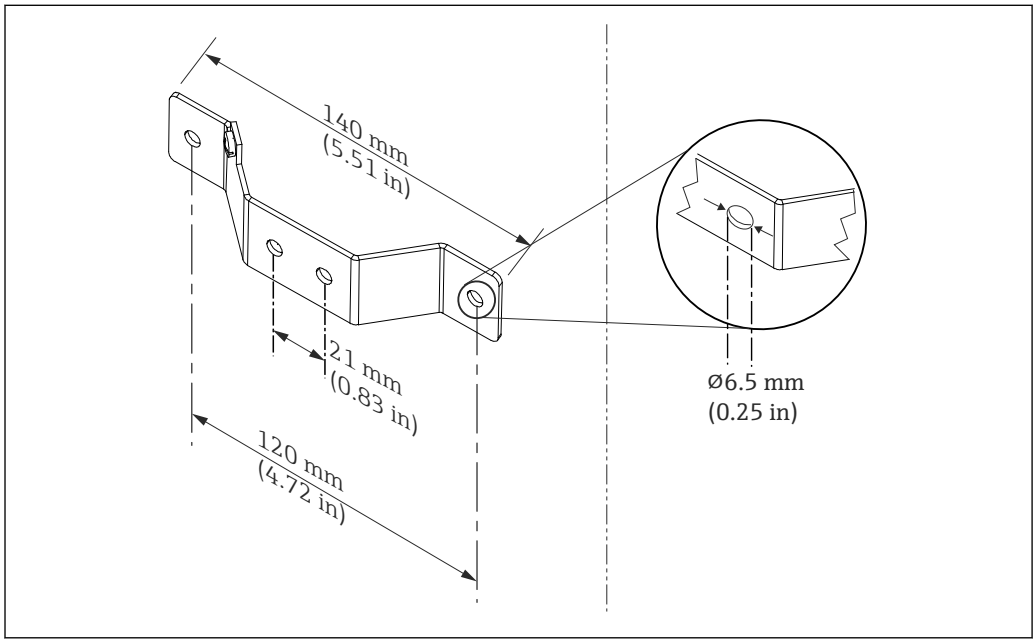

3 Dimensions of angle bracket for wall mount (complete wall mounting set available as accessory)

Procedure for mounting in a field housing, pos. B:

1. Open the cover (1) of the field housing (4).
2. Guide the mounting screws (2) through the lateral bores in the head transmitter (3).
3. Screw the head transmitter to the field housing.
4. After wiring, close the field housing cover (1) → 📖 15 again.

Item C	Mounting on DIN rail (DIN rail as per IEC 60715)
1	Mounting screws with springs
2	Head transmitter
3	Circlips
4	DIN rail clip
5	DIN rail

Procedure for mounting on a DIN rail, pos. C:

1. Press the DIN rail clip (4) onto the DIN rail (5) until it engages with a click.
2. Fit the mounting springs on the mounting screws (1) and guide the screws through the side boreholes of the head transmitter (2). Then fix both mounting screws with the snap rings (3).
3. Screw the head transmitter (2) onto the DIN rail clip (4).

Mounting typical of North America

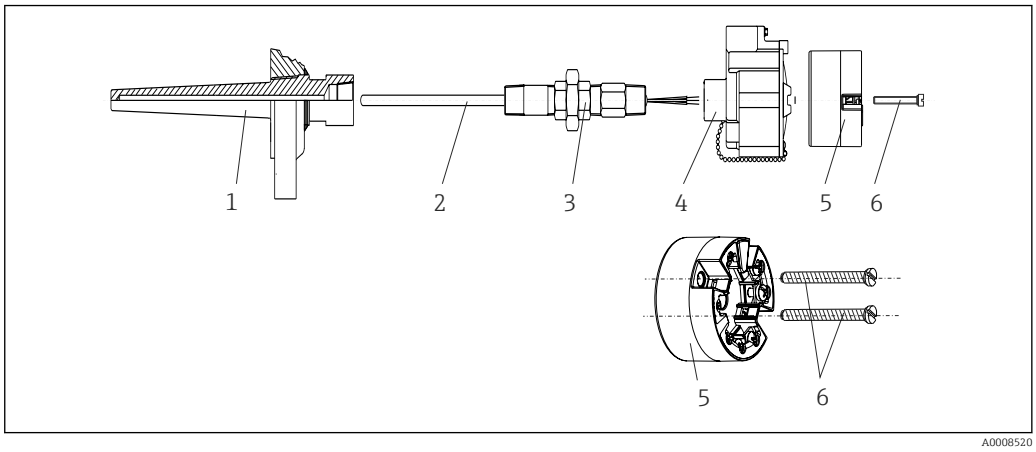

4 Head transmitter mounting

1 Thermowell
2 Insert
3 Adapter, coupling
4 Terminal head
5 Head transmitter
6 Mounting screws

Thermometer design with thermocouples or RTD sensors and head transmitter:

1. Fit the thermowell (1) on the process pipe or the container wall. Secure the thermowell according to the instructions before the process pressure is applied.
2. Fit the necessary neck tube nipples and adapter (3) on the thermowell.
3. Make sure sealing rings are installed if such rings are needed for harsh environmental conditions or special regulations.
4. Guide the mounting screws (6) through the lateral bores of the head transmitter (5).
5. Position the head transmitter (5) in the terminal head (4) in such a way that the bus cable (terminals 1 and 2) point to the cable entry.
6. Using a screwdriver, screw down the head transmitter (5) in the terminal head (4).
7. Guide the connection wires of the insert (3) through the lower cable entry of the terminal head (4) and through the middle hole in the head transmitter (5). Wire the connection wires up to the transmitter → 📄 15.
8. Screw the terminal head (4), with the integrated and wired head transmitter, onto the ready-mounted nipple and adapter (3).

NOTICE

The terminal head cover must be secured properly to meet the requirements for explosion protection.

▶ After wiring, securely screw the terminal head cover back on.

Mounting the display on the head transmitter

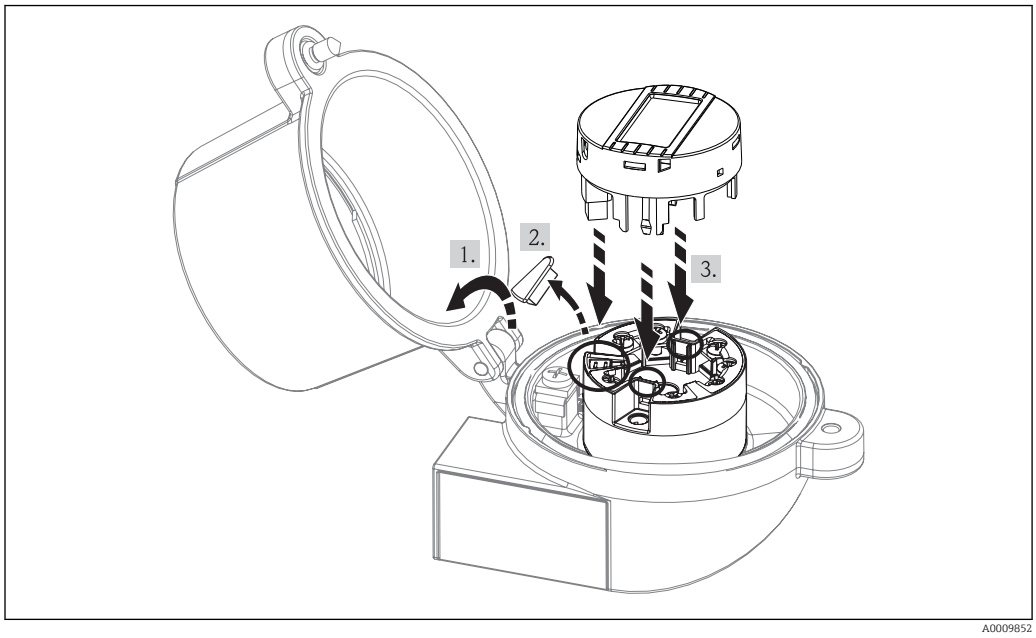

5 Mounting the display

1. Loosen the screw on the terminal head cover. Flip back the terminal head cover.
2. Remove the cover of the display connection area.
3. Fit the display module onto the mounted and wired head transmitter. The fastening pins must click securely into place on the head transmitter. After mounting, securely tighten the terminal head cover.

The display can be used only with the appropriate terminal heads - cover with viewing window (e.g. TA30 from Endress+Hauser).

4.3 Post-installation check

After installing the device, always run the following final checks:

Device condition and specifications	Notes
Is the device undamaged (visual inspection)?	-
Do the ambient conditions match the device specification (e.g. ambient temperature, measuring range, etc.)?	See 'Technical data' section

5 Electrical connection

CAUTION

- Switch off the power supply before installing or connecting the device. Failure to observe this may result in the destruction of parts of the electronics.
- Do not occupy the display connection. An incorrect connection can destroy the electronics.

5.1 Connection conditions

Proceed as follows to wire a mounted head transmitter:

1. Open the cable gland and the housing cover on the terminal head or the field housing.
2. Feed the cables through the opening in the cable gland.
3. Connect the cables as shown in → 15.
4. Tighten the cable gland again and close the housing cover.

In order to avoid connection errors always follow the instructions in the post-connection check section before commissioning!

5.2 Quick wiring guide

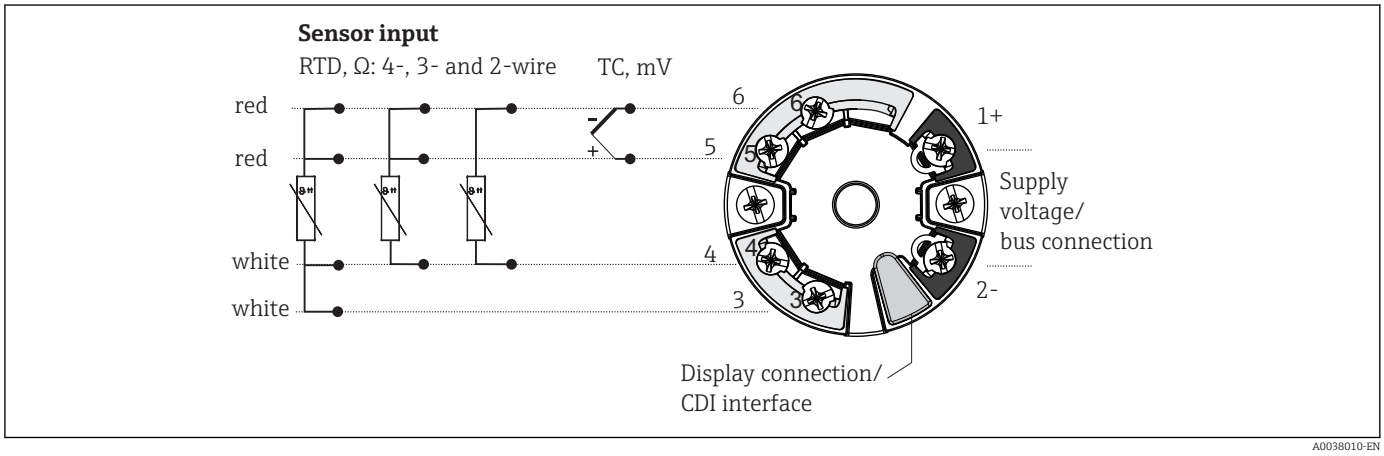

6 *Terminal assignment of head transmitter*

A minimum load of 250 Ω is required in the signal circuit in order to operate the HART® transmitter via the HART® protocol (terminals 1 and 2).

In the event of a thermocouple (TC) measurement, a 2-wire RTD can be connected to measure the reference junction temperature. This is connected to terminals 4 and 6.

NOTICE

- ESD - electrostatic discharge. Protect the terminals from electrostatic discharge. Failure to observe this may result in the destruction or malfunction of parts of the electronics.

5.3 Connecting the sensor cables

Terminal assignment of the sensor connections→ 6, 15.

5.4 Connecting the transmitter

Cable specification

- A normal device cable suffices if only the analog signal is used.
- A shielded cable is recommended for HART® communication. Observe grounding concept of the plant.

Please also observe the general procedure on → 15.

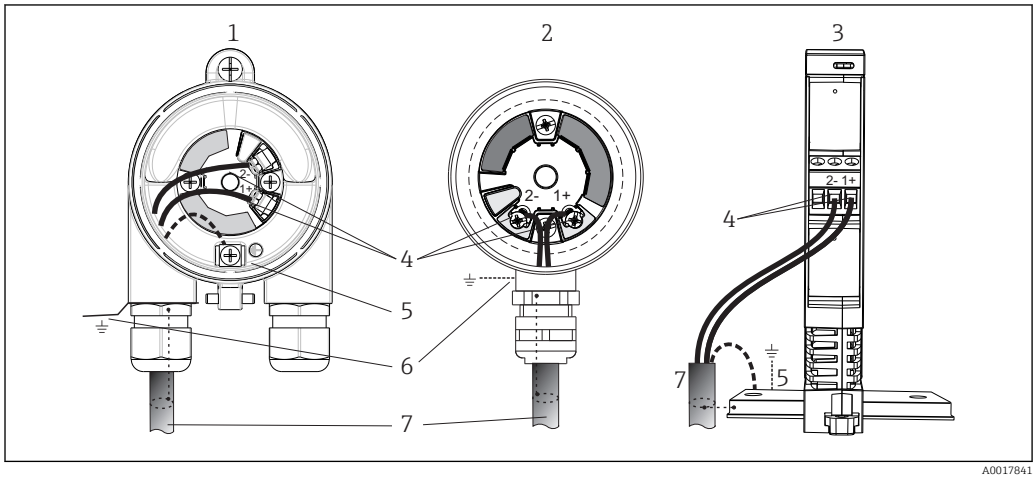

7 Connecting the signal cables and power supply

1 *Head transmitter installed in field housing*
2 *Head transmitter installed in terminal head*
3 *DIN rail transmitter mounted on DIN rail*
4 *Terminals for HART® protocol and power supply*
5 *Internal ground connection*
6 *External ground connection*
7 *Shielded signal cable (recommended for HART® protocol)*

- The terminals for signal cable connection (1+ and 2-) are protected against reverse polarity.
- Conductor cross-section:
  Max. 2.5 mm^2 for screw terminals

5.5 Special connection instructions

Shielding and grounding

The specifications of the HART® FieldComm Group must be observed when installing a HART® transmitter.

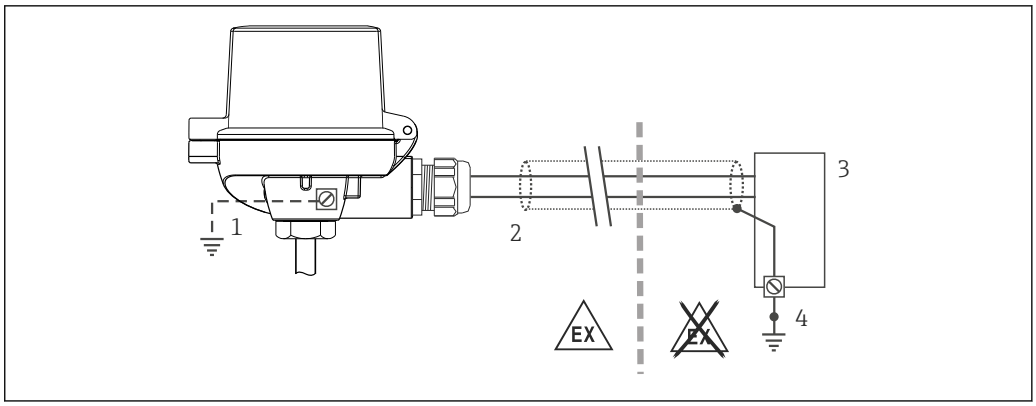

8 Shielding and grounding the signal cable at one end with HART® communication

1 Optional grounding of the field device, isolated from cable shielding
2 Grounding of the cable shield at one end
3 Supply unit
4 Grounding point for HART® communication cable shield

5.6 Post-connection check

Device condition and specifications	Notes
Is the device or cable undamaged (visual check)?	--
Electrical connection	**Notes**
Does the supply voltage match the specifications on the nameplate?	▪ Head transmitter: U = e.g. 10 to 36 V_{DC} ▪ Other values apply in the hazardous area, see the corresponding Ex Safety Instructions (XA).
Do the cables have adequate strain relief?	--
Are the power supply and signal cables correctly connected?	→ 🗎 15
Are all the screw terminals well tightened?	--
Are all the cable entries installed, tightened and sealed?	--
Are all housing covers installed and firmly tightened?	--

6 Operation options

6.1 Overview of operation options

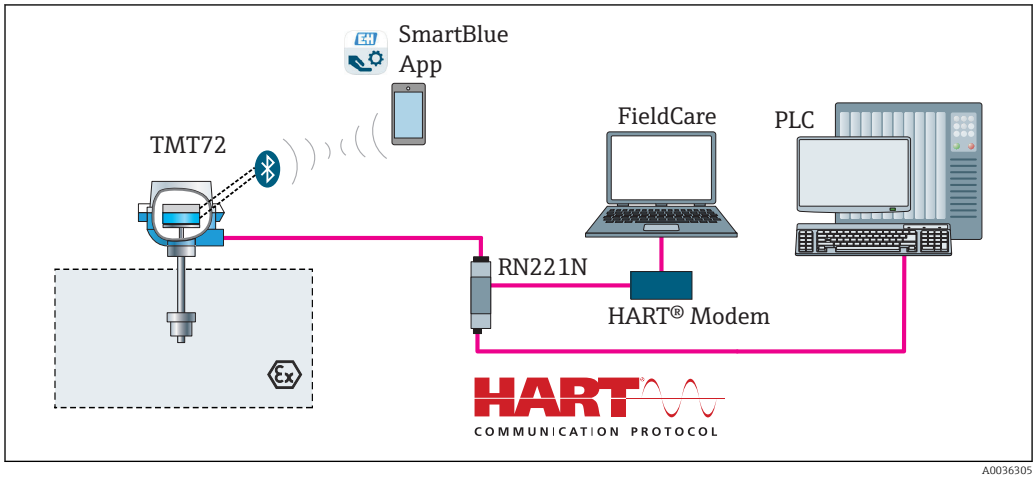

9 *Operation options for the transmitter via HART® communication*

The transmitter's optional Bluetooth interface is only active if a display unit is not attached or the CDI interface is not used for device configuration.

6.1.1 Measured value display and operating elements

Option: display TID10 with transmitter

The display may also be subsequently ordered at any time after purchasing the transmitter, see the 'Accessories' section in the Operating Instructions for the device.

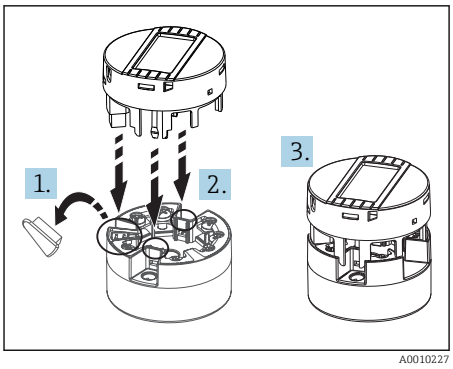

10 *Attach the display to the transmitter*

Display elements

Head transmitter

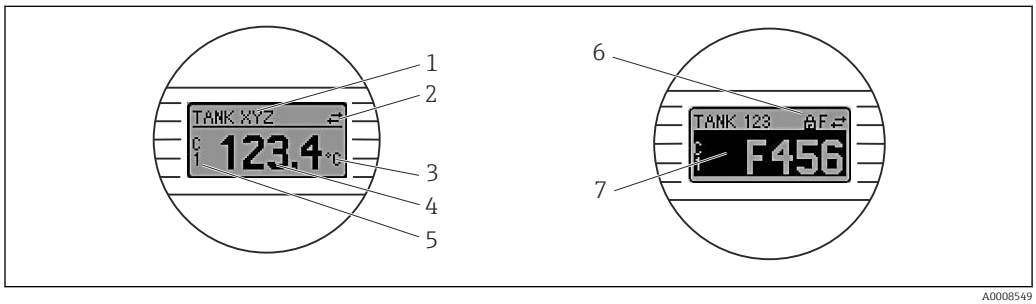

11 *Optional LC display for head transmitter*

Item no.	Function	Description
1	Displays the TAG	TAG, 32 characters long.
2	'Communication' symbol	The communication symbol appears when read and write-accessing via the fieldbus protocol.
3	Unit display	Unit display for the measured value displayed.
4	Measured value display	Displays the current measured value.
5	Value/channel display DT, PV, I, %	e.g. PV for a measured value from channel 1 or DT for the device temperature
6	'Configuration locked' symbol	The 'configuration locked' symbol appears when configuration is locked via the hardware.
7	Status signals	
	Symbols	Meaning
	F	**Error message "Failure detected"** An operating error has occurred. The measured value is no longer valid. The display alternates between the error message and "- - - -" (no valid measured value present), see "Diagnostics events" section→ 37. Detailed information on the error messages can be found in the Operating Instructions.
	C	**"Service mode"** The device is in service mode (e.g. during a simulation).
	S	**"Out of specification"** The device is being operated outside its technical specifications (e.g. during warm-up or cleaning processes).
	M	**"Maintenance required"** Maintenance is required. The measured value is still valid. The display alternates between the measured value and the status message.

Local operation

You can make various hardware settings using miniature switches (DIP switches) on the rear of the optional display.

The user has the option of ordering the display with the head transmitter, or as an accessory for subsequent mounting. → 42

NOTICE

- ESD - electrostatic discharge. Protect the terminals from electrostatic discharge. Failure to observe this may result in the destruction or malfunction of parts of the electronics.

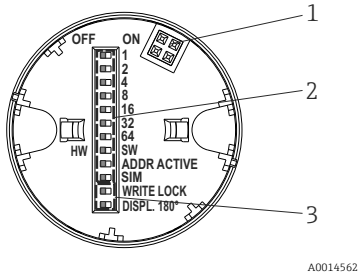

12 Hardware settings via DIP switches

1:	Connection to head transmitter
2:	DIP switches (1 - 64, SW/HW, ADDR and SIM = simulation mode) **no function** for this head transmitter
3:	DIP switch (WRITE LOCK = write protection; DISPL. 180° = switch, turn the display monitor 180°)

Procedure for setting the DIP switch:

1. Open the cover of the terminal head or field housing.
2. Remove the attached display from the head transmitter.

3. Configure the DIP switch on the rear of the display accordingly. In general: switch to ON = function enabled, switch to OFF = function disabled.
4. Fit the display onto the head transmitter in the correct position. The head transmitter accepts the settings within one second.
5. Secure the cover back onto the terminal head or field housing.

Switching write protection on/off

Write protection is switched on and off via a DIP switch on the rear of the optional attachable display. When write protection is active, parameters cannot be modified. A lock symbol on the display indicates that write protection is on. Write protection prevents any write access to the parameters. Write protection remains active even when the display is removed. To deactivate write protection, the display must be attached to the transmitter with the DIP switch switched off (WRITE LOCK = OFF). The transmitter adopts the setting during operation and does not need to be restarted.

Turning the display

The display can be rotated 180° using the "DISPL. 180°" DIP switch.

6.2 Structure and function of the operating menu

6.2.1 Structure of the operating menu

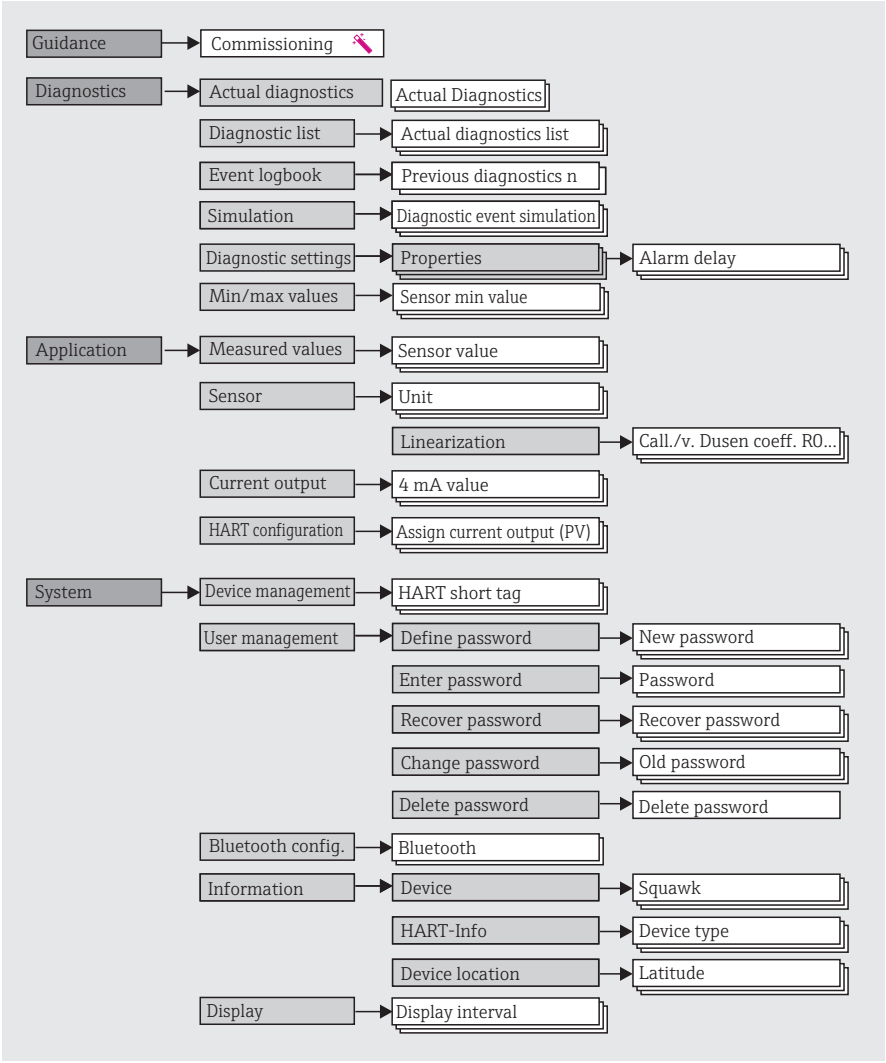

A0037574-EN

User roles

Endress+Hauser's role-based access concept consists of two hierarchical levels for the user and presents the various user roles with defined read/write authorizations derived from the NAMUR shell model.

- **Operator**
  The plant operator can only change settings that do not affect the application - and particularly the measuring path - and simple, application-specific functions that are used during operation. The operator is able to read all the parameters, however.
- **Maintenance**
  The **Maintenance** user role refers to configuration situations: commissioning and process adaptations as well as troubleshooting. It allows the user to configure and modify all available parameters. In contrast to the **Operator** user role, in the Maintenance role the user has read and write access to all the parameters.
- **Changing the user role**
  A user role - and therefore existing read and write authorization - is changed by selecting the desired user role (already pre-selected depending on the operating tool) and entering the correct password when subsequently prompted. When a user logs out, system access always returns to the lowest level in the hierarchy. A user is logged out either by actively selecting the logout function when operating the device or is logged out automatically if the device is not operated for a period of over 600 seconds. Irrespective of this, actions that are already in progress (e.g. active upload/download, data logging, etc.) continue to be executed in the background.
- **As-delivered state**
  The **Operator** user role is not enabled when the device is delivered from the factory, i.e. the **Maintenance** role is the lowest level in the hierarchy ex-works. This state makes it possible to commission the device and make other process adaptations without having to enter a password. Afterwards, a password can be assigned for the **Maintenance** user role to protect this configuration. The **Operator** user role is not visible when the device is delivered from the factory.
- **Password**
  The **Maintenance** user role can assign a password in order to restrict access to device functions. This activates the **Operator** user role, which is now the lowest hierarchy level where the user is not asked to enter a password. The password can only be changed or disabled in the **Maintenance** user role. A password can be defined at different points in the operation of the device:

In the menu Guidance → Commissioning wizard: as part of guided device operation

In the menu: System → User management

Submenus

Menu	Typical tasks	Content/meaning
"Diagnostics"	Troubleshooting: ▪ Diagnosing and eliminating process errors. ▪ Error diagnostics in difficult cases. ▪ Interpretation of device error messages and correcting associated errors.	Contains all parameters for detecting and analyzing errors: ▪ **Diagnostic list** Contains up to 3 error messages currently pending ▪ **Event logbook** Contains the last 10 error messages (no longer pending) ▪ **"Simulation" submenu** Used to simulate measured values, output values or diagnostic messages ▪ **"Diagnostic settings" submenu** Contains all the parameters for configuring error events ▪ **"Min/max values" submenu** Contains the minimum/maximum indicator and the reset option
"Application"	Commissioning: ▪ Configuration of the measurement. ▪ Configuration of data processing (scaling, linearization, etc.). ▪ Configuration of the analog measured value output. Tasks during operation: Reading measured values.	Contains all parameters for commissioning: ▪ **"Measured values" submenu** Contains all the current measured values ▪ **"Sensor" submenu** Contains all the parameters for configuring the measurement ▪ **"Output" submenu** Contains all the parameters for configuring the analog current output ▪ **"HART configuration" submenu** Contains the settings and the most important parameters for HART communication
"System"	Tasks that require detailed knowledge of the system administration of the device: ▪ Optimum adaptation of the measurement for system integration. ▪ Detailed configuration of the communication interface. ▪ User and access administration, password control ▪ Information concerning device identification HART information, and display configuration	Contains all the higher-level device parameters that are assigned for system, device and user management, including Bluetooth configuration. ▪ **"Device management" submenu** Contains parameters for general device management ▪ **"Bluetooth configuration" submenu (option)** Contains the function for enabling/disabling the Bluetooth interface ▪ **"Device and user management" submenus** Parameters for access authorization, password assignment, etc. ▪ **"Information" submenu** Contains all the parameters for the unique identification of the device ▪ **"Display" submenu** Configuration of the display

6.3 Access to the operating menu via the operating tool

6.3.1 DeviceCare

Function scope

DeviceCare is a free configuration tool for Endress+Hauser devices. It supports devices with the following protocols, provided a suitable device driver (DTM) is installed: HART, PROFIBUS, FOUNDATION Fieldbus, Ethernet/IP, Modbus, CDI, ISS, IPC and PCP. The tool is aimed at customers without a digital network in plants and workshops and Endress +Hauser service technicians. The devices can be connected directly via a modem (point-to-point) or a bus system. DeviceCare is fast, easy and intuitive to use. It can run on a PC, laptop or tablet with a Windows operating system.

Source for device description files

See information → 📄 28

6.3.2 FieldCare

Function scope

FDT/DTM-based plant asset management tool from Endress+Hauser. It can configure all smart field units in a system and help you manage them. By using the status information, it is also a simple but effective way of checking their status and condition. Access is via the HART® protocol, CDI (= Endress+Hauser Common Data Interface). It also supports devices with the following protocols, provided a suitable device driver (DTM) is installed: PROFIBUS, FOUNDATION Fieldbus.

Typical functions:
- Configuring parameters of transmitters
- Loading and saving device data (upload/download)
- Documentation of the measuring point
- Visualization of the measured value memory (line recorder) and event logbook

For details, see Operating Instructions BA027S/04/xx and BA059AS/04/xx

Source for device description files

See information → 28

Establishing a connection

Example: HART® modem Commubox FXA195 (USB)

1. Make sure that the DTM library is updated for all the connected devices (e.g. FXA19x, TMTxy).
2. Start FieldCare and create a project.
3. Go to View --> Network: right-click **Host PC** Add device...
   ↳ The **Add device** window opens.
4. Select the **HART communication** option from the list and press **OK** to confirm.
5. Double-click **HART communication** DTM instance.
   ↳ Check whether the correct modem is connected to the serial interface and press **OK** to confirm.
6. Right-click **HART communication** and select the **Add device** option in the context menu that opens.
7. Select the desired device from the list and press **OK** to confirm.
   ↳ The device now appears in the network list.
8. Right-click the device and select the **Connect** option in the context menu.
   ↳ The CommDTM is displayed in green.
9. Double-click the device in the network to establish the online connection to the device.
   ↳ The online configuration is available.

If transferring the device parameters following an offline configuration, the password for **Maintenance** - if assigned - must first be entered in the "User management" menu.

User interface

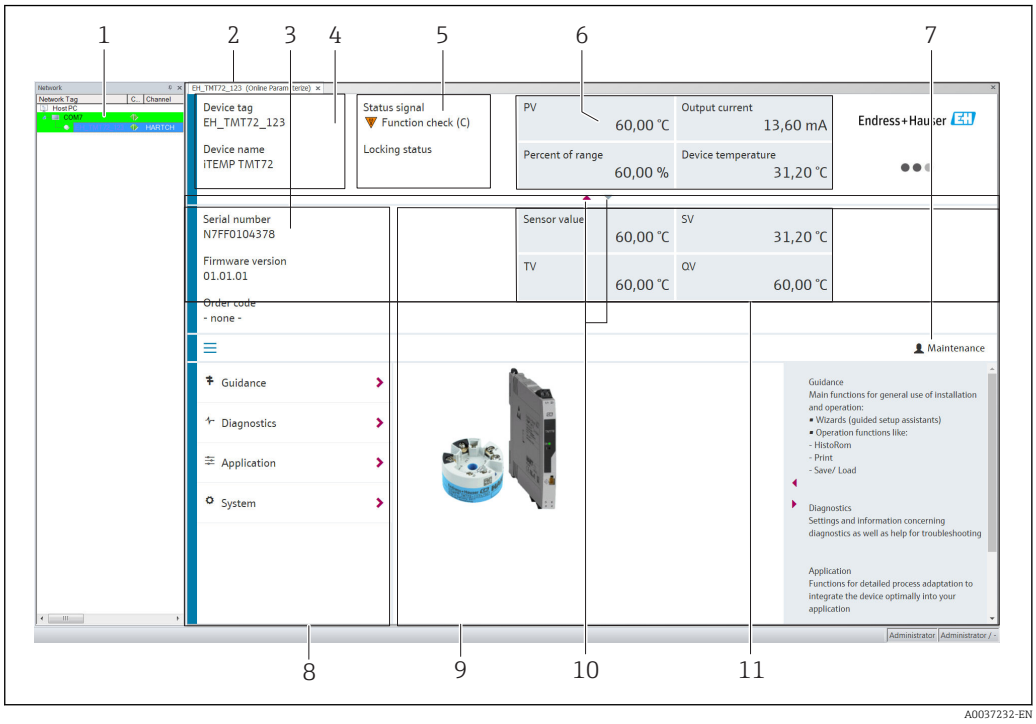

A0037232-EN

13 FieldCare user interface with device information

1 *Network view*
2 *Header*
3 *Extended header*
4 *Tag name and device name*
5 *Status signal*
6 *Measured values with device and measured value status information, simple presentation, e.g. PV, output current, % span, device temperature*
7 *Current user role (with direct link to user management)*
8 *Navigation area with operating menu structure*
9 *Work area and help section that can be shown/hidden*
10 *Navigation arrow to show/hide the extended header*
11 *Extended display of device and measured value information, e.g. sensor value, SV (TV, QV)*

6.3.3 Field Xpert

Function scope

Field Xpert for mobile plant asset management is available as both a tablet PC and an industrial PDA with an integrated touch screen for the commissioning and maintenance of field devices in hazardous and non-hazardous areas. It enables the efficient configuration of FOUNDATION fieldbus, HART and WirelessHART devices. Communication is wireless via Bluetooth or WiFi interfaces.

Source for device description files

See information → 28.

6.3.4 AMS Device Manager

Function scope

Program from Emerson Process Management for operating and configuring measuring devices via the HART® protocol.

Source for device description files

See information → 🗎 28.

6.3.5 SIMATIC PDM

Function scope

SIMATIC PDM is a standardized, manufacturer-independent program from Siemens for the operation, configuration, maintenance and diagnosis of intelligent field devices via the HART ® protocol.

Source for device description files

See information → 🗎 28.

6.3.6 Field Communicator 375/475

Function scope

Industrial handheld terminal from Emerson Process Management for remote configuration and measured value display via the HART ® protocol.

Source for device description files

See information → 🗎 28.

6.4 Access to the operating menu via the SmartBlue app

The device can be operated and configured via the SmartBlue app. The connection is established via the Bluetooth® wireless technology interface.

Prerequisite:
- The device has the optional Bluetooth interface: order code "Communication; output signal; operation", option P: "HART; 4-20 mA; HART/Bluetooth (app) configuration"
- A smartphone or tablet with the SmartBlue app installed.

Supported functions
- Device selection in Live List and access to the device (login)
- Configuration of the device
- Access to measured values, device status and diagnostics information

The SmartBlue app is available for free download for Android devices (Google Playstore) and iOS devices (iTunes Apple Shop) : *Endress+Hauser SmartBlue*

Directly to the app with the QR code:

ANDROID APP ON Google Play

Download on the App Store

A0037924

System requirements

- Devices with iOS:
  - iPhone 4S or higher, from iOS9.0
  - iPad2 or higher, from iOS9.0
  - iPod Touch 5th generation or higher, from iOS9.0
- Devices with Android:
  Android 4.4 KitKat or higher

Download the SmartBlue app:

1. Install and start the SmartBlue app.
   ↳ A Live List shows all the devices available.
2. Select the device from the Live List.
   ↳ The Login dialog box opens.

Logging in:

3. Enter the user name: **admin**
4. Enter the initial password: serial number of the device.
5. Confirm your entry.
   ↳ The device information opens.

Navigate through the various items of information about the device: swipe the screen to the side.

- The range under reference conditions is:
  - 10 m (33 ft) when installed in the terminal head or field housing with a display window
  - 5 m (16.4 ft) when installed in the terminal head or field housing
- Incorrect operation by unauthorized persons is prevented by means of encrypted communication and password encryption
- The Bluetooth® wireless technology interface can be deactivated

The transmitter's optional Bluetooth interface is only active if a display unit is not attached or the CDI interface is not used for device configuration.

7 System integration

7.1 Overview of device description files

Version data for the device

Firmware version	01.01.zz	▪ On the title page of the Operating instructions ▪ On the nameplate → 1, 9 ▪ **Firmware version** parameter System → Information → Device →Firmware version
Manufacturer ID	0x11	**Manufacturer ID** parameter System → Information → HART info → Manufacturer ID
Device type ID	0x11D0	**Device type** parameter System → Information → HART info → Device type
HART protocol revision	7	---
Device revision	1	▪ On the transmitter nameplate → 1, 9 ▪ **Device revision** parameter System → Information → HART info → Device revision

The suitable device driver software (DD/DTM) for the individual operating tools can be acquired from a variety of sources:
- www.endress.com --> Downloads --> Search field: Software --> Software type: Device driver
- www.endress.com --> Products: individual product page, e.g. TMTxy --> Documents/ Manuals/Software: Electronic Data Description (EDD) or Device Type Manager (DTM).
- Via DVD (please contact your local Endress+Hauser Sales Center)

Endress+Hauser supports all common operating tools from a variety of manufacturers (e.g. Emerson Process Management, ABB, Siemens, Yokogawa, Honeywell and many others). Endress+Hauser's FieldCare and DeviceCare operating tools are available for download (www. endress.com --> Downloads --> Search field: Software --> Application software) or on the optical data storage medium (DVD) which you can obtain from your local Endress +Hauser Sales Center.

7.2 Measured variables via HART protocol

The following measured values are assigned to the device variables at the factory:

Device variable	Measured value
Primary device variable (PV)	Sensor
Secondary device variable (SV)	Device temperature
Tertiary device variable (TV)	Sensor
Quaternary device variable (QV)	Sensor

7.3 Supported HART® commands

The HART® protocol enables the transfer of measuring data and device data between the HART® master and the field device for configuration and diagnostics purposes. HART® masters such as the handheld terminal or PC-based operating programs (e.g. FieldCare) need device description files (DD, DTM) which are used to access all the information in a HART® device. This information is transmitted exclusively via "commands".

There are three different types of command

- Universal commands:
  All HART® devices support and use universal commands. These are associated with the following functionalities for example:
  – Recognition of HART® devices
  – Reading digital measured values
- Common practice commands:
  Common practice commands offer functions which are supported and can be executed by many but not all field devices.
- Device-specific commands:
  These commands allow access to device-specific functions which are not HART® standard. Such commands access individual field device information, among other things.

Command No.	Designation
Universal commands	
0, Cmd0	Read unique identifier
1, Cmd001	Read primary variable
2, Cmd002	Read loop current and percent of range
3, Cmd003	Read dynamic variables and loop current
6, Cmd006	Write polling address
7, Cmd007	Read loop configuration
8, Cmd008	Read dynamic variable classifications
9, Cmd009	Read device variables with status
11, Cmd011	Read unique identifier associated with TAG
12, Cmd012	Read message
13, Cmd013	Read TAG, descriptor, date
14, Cmd014	Read primary variable transducer information
15, Cmd015	Read device information
16, Cmd016	Read final assembly number
17, Cmd017	Write message
18, Cmd018	Write TAG, descriptor, date
19, Cmd019	Write final assembly number
20, Cmd020	Read long TAG (32-byte TAG)
21, Cmd021	Read unique identifier associated with long TAG
22, Cmd022	Write long TAG (32-byte TAG)
38, Cmd038	Reset configuration changed flag
48, Cmd048	Read additional device status
Common practice commands	
33, Cmd033	Read device variables
34, Cmd034	Write primary variable damping value
35, Cmd035	Write primary variable range values
40, Cmd040	Enter/Exit fixed current mode
42, Cmd042	Perform device reset
44, Cmd044	Write primary variable units
45, Cmd045	Trim loop current zero
46, Cmd046	Trim loop current gain

Command No.	Designation
50, Cmd050	Read dynamic variable assignments
54, Cmd054	Read device variable information
59, Cmd059	Write number of response preambles
72, Cmd072	Squawk
95, Cmd095	Read device communications statistics
100, Cmd100	Write primary variable alarm code
516, Cmd516	Read device location
517, Cmd517	Write device location
518, Cmd518	Read location description
519, Cmd519	Write location description
520, Cmd520	Read process unit tag
521, Cmd521	Write process unit tag
523, Cmd523	Read condensed status mapping array
524, Cmd524	Write condensed status mapping array
525, Cmd525	Reset condensed status mapping array
526, Cmd526	Write simulation mode
527, Cmd527	Simulate status bit

8 Commissioning

8.1 Post-installation check

Before commissioning the measuring point make sure that all final checks have been carried out:
- "Post-installation check" checklist→ 14
- "Post-connection check" checklist → 17

8.2 Switching on the transmitter

Once you have completed the post-connection checks, switch on the supply voltage. The transmitter performs a number of internal test functions after power-up. As this procedure progresses, the following sequence of messages appears on the display:

Step	Display
1	"Display" text and firmware version of the display
2	Firm logo
3	Device name with firmware version, hardware version and device revision
4	Displays the sensor configuration (sensor type and type of connection) along with the configured measuring range
5a	Current measured value or
5b	Current status message If the switch-on procedure is not successful, the relevant diagnostic event, depending on the cause, is displayed. A detailed list of diagnostic events and the corresponding troubleshooting instructions can be found in the "Diagnostics and troubleshooting" section → 35.

The device operates in normal mode after approx. 7 seconds, including the attached display. Normal measuring mode commences as soon as the switch-on procedure is completed. Measured values and status values appear on the display.

If the display is attached when the Bluetooth interface is activated, display initialization is performed twice and Bluetooth communication is disabled simultaneously.

8.3 Configuring the measuring device

Wizards

The **Guidance** menu contains various wizards. Wizards not only query individual parameters but also guide the user through the configuration and/or verification of entire sets of parameters with step-by-step instructions, including questions, that are comprehensible for the user. The "Start" button can be disabled for wizards that require specific access authorization (keyhole symbol appears on the screen).

The following five operating elements are supported for navigation in the wizards:

- **Start**
  Only on the initial page: start the wizard and go to the first section
- **Next**
  Go to the next page of the wizard. Is not enabled until parameters are entered or confirmed.
- **Back**
  Return to the previous page
- **Cancel**
  If Cancel is selected, the status before the wizard was started is restored
- **Finish**
  Closes the wizard and possibility of making additional parameter settings on the device. Only enabled on the final page.

8.3.1 Commissioning wizard

Commissioning is the first step towards using the device for the designated application. The Commissioning wizard contains an introductory page (with the "Start" operating element) and a short description of the content. The wizard consists of several sections in which the user is guided step-by-step through the commissioning of the device.

"Device management" is the first section that appears when the user runs the wizard, and contains the following parameters. Its main purpose is to provide information about the device:

Navigation **Guidance→ Commissioning → Start**

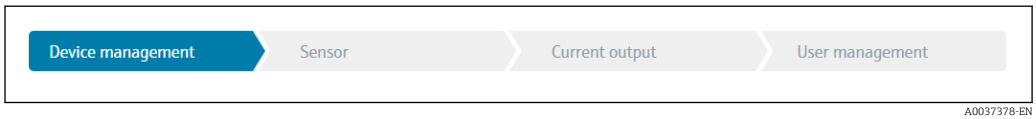

A0037378-EN

Device TAG
Device name
Serial number
Extended order code (n) [1)]
HART short tag
HART date code
HART descriptor
HART message

1) n = placeholder for 1, 2, 3

The second section, "Sensor", takes the user through all the relevant settings for the sensor. The number of parameters displayed depends on the corresponding settings. The following parameters can be configured:

Navigation **Guidance → Commissioning → Sensor**

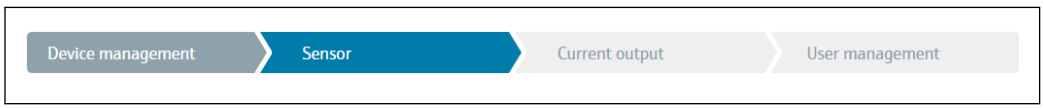

A0037389-EN

Unit
Sensor type
Connection type
2-wire compensation
Reference junction
RJ preset value

In the third section, the settings are made for the analog output and the output's alarm response. The following parameters can be configured:

Navigation **Guidance → Commissioning → Current output**

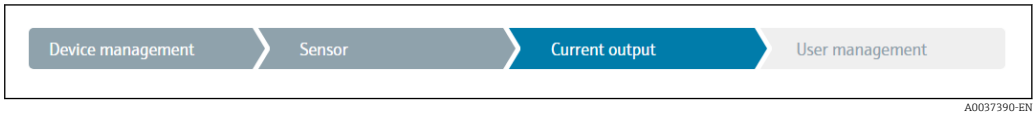

A0037390-EN

4 mA value
20 mA value
Failure mode
Failure current

In the final section, a password can be defined for the "Maintenance" user role. This is strongly recommended to protect the device against unauthorized access. The following steps describe how to configure a password for the "Maintenance" role for the first time.

Navigation **Guidance → Commissioning → User management**

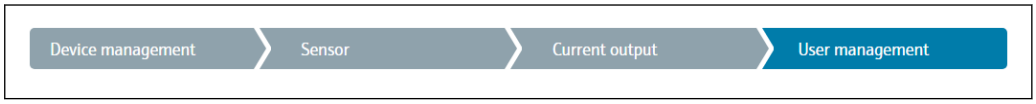

A0037391-EN

Access status
New password
Confirm new password

1. The **Maintenance** role appears in the "Access status" picklist. The **Maintenance** user role must first be selected when operating with the SmartBlue App.
   ↳ Afterwards, the **New password** and **Confirm new password** input boxes appear.
2. Enter a user-defined password that meets the password rules indicated in the online help.
3. Enter the password again in the **Confirm new password** input box.

Once the password has been entered successfully, parameter changes, particularly those that are needed for commissioning, process adaptation/optimization and troubleshooting, can only be implemented in the **Maintenance** user role and if the password is entered successfully.

8.4 Protecting settings from unauthorized access

8.4.1 Hardware locking

The device can be protected against unauthorized access by hardware locking. In the locking and access concept, hardware locking always has top priority. The device is write-protected if the keyhole symbol appears in the header of the measured value display. To disable write protection, switch the write protection switch on the back of the display to the "OFF" position (hardware write protection). → 19

8.4.2 Software locking

By assigning a password for the **Maintenance** user role, it is possible to restrict access authorization and protect the device against unauthorized access. See the Commissioning wizard → 32

Commissioning wizard → 32

The parameters are also protected against modification if the user logs out of the **Maintenance** user role and the system switches to the **Operator** role. No keyhole symbol is displayed, however.

To disable the write protection, the user must log on with the **Maintenance** user role via the relevant operating tool.

User role concept → 21

9 Diagnostics and troubleshooting

9.1 General troubleshooting

Always start troubleshooting with the checklists below if faults occur after startup or during operation. The checklists take you directly (via various queries) to the cause of the problem and the appropriate remedial measures.

Due to its design, the device cannot be repaired. However, it is possible to send the device in for examination. See the information in the "Return" section. .→ 📄 41

General errors

Problem	Possible cause	Remedy
Device is not responding.	Supply voltage does not match that specified on the nameplate.	Check the voltage at the transmitter directly using a voltmeter and correct.
	Connecting cables are not in contact with the terminals.	Check the contacting of the cables and correct if necessary.
	Electronics unit is defective.	Replace the device.
Output current < 3.6 mA	Signal line is not wired correctly.	Check wiring.
	Electronics unit is defective.	Replace the device.
HART communication is not working.	Missing or incorrectly installed communication resistor.	Install the communication resistor (250 Ω) correctly.
	Commubox is connected incorrectly.	Connect Commubox correctly.
	Commubox is not set to "HART".	Set Commubox selector switch to "HART".

Check display (optionally in conjunction with head transmitter)

Problem	Possible cause	Remedy
No display visible	No supply voltage	▪ Check the supply voltage at the head transmitter, terminals + and -. ▪ Ensure that the display module holders are correctly seated and that the display module is properly connected to the head transmitter→ 📄 10. ▪ If possible, test the display module with other suitable head transmitters, e.g. an Endress+Hauser head transmitter.
	The display module is defective.	Replace the module.
	The electronics of the head transmitter are defective.	Replace the head transmitter.

Local error messages on the display
→ 📄 37

Faulty connection to the fieldbus host system		
Problem	**Possible cause**	**Remedy**
Device is not responding.	Supply voltage does not match that specified on the nameplate.	Check the voltage at the transmitter directly using a voltmeter and correct.
	Connecting cables are not in contact with the terminals.	Check the contacting of the cables and correct if necessary.
	Electronics unit is defective.	Replace the device.
Output current < 3.6 mA	Signal line is not wired correctly.	Check wiring.
	Electronics unit is defective.	Replace the device.
HART communication is not working.	Missing or incorrectly installed communication resistor.	Install the communication resistor (250 Ω) correctly.
	Commubox is connected incorrectly.	Connect Commubox correctly.

Error messages in the configuration software
→ 38

Application errors without status messages for RTD sensor connection

Problem	Possible cause	Remedy
Measured value is incorrect/ inaccurate	Incorrect sensor orientation.	Install the sensor correctly.
	Heat conducted by sensor.	Observe the face-to-face length of the sensor.
	Device programming is incorrect (number of wires).	Change the **Connection type** device function.
	Device programming is incorrect (scaling).	Change scaling.
	Incorrect RTD configured.	Change the **Sensor type** device function.
	Sensor connection.	Check that the sensor is connected correctly.
	The cable resistance of the sensor (2-wire) was not compensated.	Compensate the cable resistance.
	Offset incorrectly set.	Check offset.
Failure current (≤ 3.6 mA or ≥ 21 mA)	Faulty sensor.	Check the sensor.
	RTD connected incorrectly.	Install the connecting cables correctly (terminal diagram).
	Device programming is incorrect (e.g. number of wires).	Change the **Connection type** device function.
	Incorrect programming.	Incorrect sensor type set in the **Sensor type** device function. Set the correct sensor type.

Application errors without status messages for TC sensor connection

Problem	Possible cause	Remedy
Measured value is incorrect/ inaccurate	Incorrect sensor orientation.	Install the sensor correctly.
	Heat conducted by sensor.	Observe the face-to-face length of the sensor.
	Device programming is incorrect (scaling).	Change scaling.
	Incorrect thermocouple type (TC) configured.	Change the **Sensor type** device function.
	Incorrect reference measuring point set.	Set the correct reference measuring point.
	Interference via the thermocouple wire welded in the thermowell (interference voltage coupling).	Use a sensor where the thermocouple wire is not welded.
	Offset incorrectly set.	Check offset.
Failure current (≤ 3.6 mA or ≥ 21 mA)	Faulty sensor.	Check the sensor.
	Sensor is connected incorrectly.	Install the connecting cables correctly (terminal diagram).
	Incorrect programming.	Incorrect sensor type set in the **Sensor type** device function. Set the correct sensor type.

9.2 Diagnostic information on local display

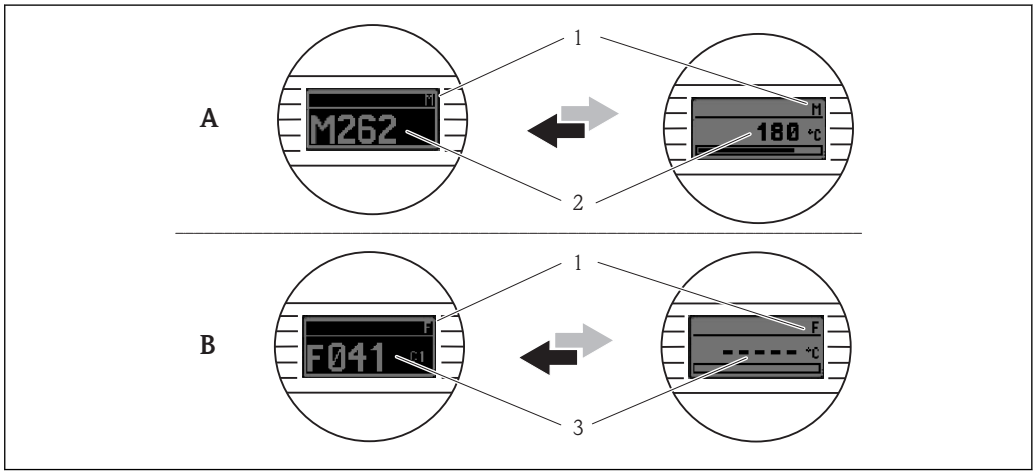

A0014837

A Display in the event of a warning
B Display in the event of an alarm
1 Status signal in the header
2 The display alternates between the primary measured value and the status - indicated by the appropriate letter (M, C or S) - plus the defined error number.
3 The display alternates between "- - -" (no valid measured value) and the status - indicated by the appropriate letter (F) - plus the defined error number.

9.3 Diagnostic information via communication interface

NOTICE

Status signals and diagnostic behavior can be configured manually for certain diagnostic events. If a diagnostic event occurs, however, it is not guaranteed that the measured values are valid for the event and comply with the process for the status signals S and M and the diagnostic behavior: 'Warning' and Disabled'.

▶ Reset the status signal assignment to the factory setting.

Status signals

Symbol	Event category	Meaning
F	Operating error	An operating error has occurred.
C	Service mode	The device is in service mode (e.g. during a simulation).
S	Out of specification	The device is being operated outside its technical specifications (e.g. during warm-up or cleaning processes).
M	Maintenance required	Maintenance is required.
N	Not categorized	

Diagnostic behavior

Alarm	Measurement is interrupted. The signal outputs assume the defined alarm condition. A diagnostic message is generated.
Warning	The device continues to measure. A diagnostic message is generated.
Disabled	The diagnosis is completely disabled even if the device is not recording a measured value.

9.4 Diagnostic list

If two or more diagnostics events are pending simultaneously, only the message with the highest priority is shown. Additional pending diagnostic messages are shown in the **Diagnostic list** submenu . The status signal dictates the priority in which the diagnostic messages are displayed. The following order of priority applies: F, C, S, M. If two or more diagnostic events with the same status signal are active simultaneously, the numerical order of the event number dictates the order of priority in which the events are displayed, e.g.: F042 appears before F044 and before S044.

9.5 Event logbook

Past diagnostic messages that are no longer pending are shown in the **Event logbook** submenu.→ 📄 66

9.6 Overview of diagnostic events

Each diagnostic event is assigned a certain event behavior at the factory. The user can change this assignment for certain diagnostic events.

Example:

		Settings		Device behavior			
Configuration examples	**Diagnostic number**	**Status signal**	**Diagnostic behavior from the factory**	**Status signal (output via HART® communication)**	**Current output**	**PV, status**	**Display**
1. Default setting	047	S	Warning	S	Measured value	Measured value, UNCERTAIN	S047
2. Manual setting: status signal S changed to F	047	F	Warning	F	Measured value	Measured value, UNCERTAIN	F047
3. Manual setting: **Warning** diagnostic behavior changed to **Alarm**	047	S	Alarm	S	Configured failure current	Measured value, BAD	S047
4. Manual setting: **Warning** changed to **Disabled**	047	S [1]	Disabled	- [2]	Last valid measured value [3]	Last valid measured value, GOOD	S047

1) Setting is not relevant.
2) Status signal is not displayed.
3) The failure current is output if no valid measured value is available.

Diagnostic number	Short text	Corrective measure	Status signal from the factory	Customizable [1] / Not customizable	Diagnostic behavior from the factory	Customizable [2] / Not customizable
Diagnostics for the sensor						
041	Sensor interrupted	1. Check electrical wiring. 2. Replace sensor. 3. Check connection type.	F	✓	Alarm	✓
042	Sensor corroded	1. Check sensor. 2. Replace sensor.	M	✓	Warning	✓
043	Short-circuit	1. Check electrical connection. 2. Check sensor. 3. Replace sensor or cable.	F	✓	Alarm	✓
047	Sensor limit reached sensor n	1. Check sensor. 2. Check process conditions.	S	✓	Warning	✓
145	Compensation reference point	1. Check terminal temperature. 2. Check external reference point.	F	✓	Alarm	✓
Diagnostics for the electronics						
201	Electronics faulty	1. Restart device. 2. Replace electronics.	F	✗	Alarm	✗
221	Reference sensor defective	Replace device.	M	✓	Alarm	✗
Diagnostics for the configuration						
401	Factory reset active	Factory reset active, please wait.	C	✗	Warning	✗

Diagnostic number	Short text	Corrective measure	Status signal from the factory	✓ Customizable [1] / ✗ Not customizable	Diagnostic behavior from the factory	✓ Customizable [2] / ✗ Not customizable
402	Initialization active	Initialization active, please wait.	C	✗	Warning	✗
410	Data transfer failed	1. Check connection. 2. Retry data transfer.	F	✗	Alarm	✗
411	Up-/download active	Up-/download active, please wait.	C	✗	Warning	✗
435	Linearization faulty	Check linearization.	F	✗	Alarm	✗
485	Process variable simulation active	Deactivate simulation.	C	✗	Warning	✗
491	Current output simulation	Deactivate simulation.	C	✓	Warning	✓
495	Diagnostic event simulation active	Deactivate simulation.	C	✓	Warning	✓
531	Factory adjustment missing	1. Contact service. 2. Replace device.	F	✗	Alarm	✗
537	Configuration	1. Check device configuration 2. Upload and download new configuration. (In case of current output: check configuration of analog output.)	F	✗	Alarm	✗
582	Sensor diagnostics TC deactivated	Switch on diagnostics for thermocouple measurement	C	✗	Warning	✗
Diagnostics for the process						
801	Supply voltage too low [3]	Increase supply voltage.	S	✓	Alarm	✗
825	Operating temperature	1. Check ambient temperature. 2. Check process temperature.	S	✓	Warning	✓
844	Process value outside specification	1. Check process value. 2. Check application. Check sensor.	S	✓	Warning	✓

1) Can be set to F, C, S, M, N
2) Can be set to 'Alarm', 'Warning' and 'Disabled'
3) In the case of this diagnostic event, the device always outputs a "low" alarm status (output current ≤ 3.6 mA).

9.7 Firmware history

Revision history

The firmware version (FW) on the nameplate and in the Operating Instructions indicates the device release: XX.YY.ZZ (example 01.02.01).

XX	Change to main version. No longer compatible. The device and Operating Instructions change.
YY	Change to functions and operation. Compatible. The Operating Instructions change.
ZZ	Fixes and internal changes. No changes to the Operating Instructions.

Date	Firmware version	Changes	Documentation
11/2018	01.01.zz	Original firmware	BA01854T/09/en/01.18

10 Maintenance

No special maintenance work is required for the device.

Cleaning
A clean, dry cloth can be used to clean the device.

11 Repair

11.1 General information

Due to its construction, the device cannot be repaired.

11.2 Spare parts

Spare parts currently available for the device can be found online at: http://www.products.endress.com/spareparts_consumables. Always quote the serial number of the device when ordering spare parts!

Type	Order number
Standard - DIN securing set (2 screws and springs, 4 shaft lock-down rings, 1 plug for the display interface)	71044061
US - M4 securing set (2 screws and 1 plug for the display interface)	71044062
Commubox FXA195 HART®, For intrinsically safe HART® communication with FieldCare via the USB interface.	FXA195-.....

11.3 Return

The measuring device must be returned if it is need of repair or a factory calibration, or if the wrong measuring device has been delivered or ordered. Legal specifications require Endress+Hauser, as an ISO-certified company, to follow certain procedures when handling products that are in contact with the medium.

To ensure safe, swift and professional device returns, please refer to the procedure and conditions for returning devices provided on the Endress+Hauser website at http://www.endress.com/support/return-material

11.4 Disposal

The device contains electronic components and must, therefore, be disposed of as electronic waste in the event of disposal. Pay particular attention to the local regulations governing waste disposal in your country.

12 Accessories

Various accessories, which can be ordered with the device or subsequently from Endress +Hauser, are available for the device. Detailed information on the order code in question is available from your local Endress+Hauser sales center or on the product page of the Endress+Hauser website: www.endress.com.

Accessories included in the scope of delivery:
- Multilingual Brief Operating Instructions as hard copy
- ATEX supplementary documentation: ATEX Safety instructions (XA), **C**ontrol **D**rawings (CD)
- Mounting material for head transmitter

12.1 Device-specific accessories

Accessories
TID10 display unit for Endress+Hauser head transmitter iTEMP TMT8x [1] or TMT7x, attachable
TID10 service cable; connecting cable for service interface, 40 cm
Field housing TA30x for Endress+Hauser head transmitter
Adapter for DIN rail mounting, clip as per IEC 60715 (TH35) without securing screws
Standard - DIN mounting set (2 screws + springs, 4 securing disks and 1 display connector cover)
US - M4 Mounting screws (2 M4 screws and 1 display connector cover)
Stainless steel wall mounting bracket Stainless steel pipe mounting bracket

1) Without TMT80

12.2 Communication-specific accessories

Accessories	Description
Commubox FXA195 HART	For intrinsically safe HART® communication with FieldCare via the USB interface. For details, see Technical Information TI404F/00
Commubox FXA291	Connects Endress+Hauser field devices with a CDI interface (= Endress+Hauser Common Data Interface) and the USB port of a computer or laptop. For details, see Technical Information TI405C/07
WirelessHART adapter	Is used for the wireless connection of field devices. The WirelessHART® adapter can be easily integrated into field devices and existing infrastructures, offers data protection and transmission safety and can be operated in parallel with other wireless networks. For details, see Operating Instructions BA061S/04
Field Xpert SMT70	Universal, high-performance tablet PC for device configuration The tablet PC enables mobile plant asset management in hazardous and non-hazardous areas. It is suitable for commissioning and maintenance staff to manage field instruments with a digital communication interface and to record progress. This tablet PC is designed as a comprehensive, all-in-one solution. With a pre-installed driver library, it is an easy-to-use, touch-sensitive tool which can be used to manage field instruments throughout their entire life cycle. For details, see Technical Information TI01342S/04

12.3 Service-specific accessories

Accessories	Description
Applicator	Software for selecting and sizing Endress+Hauser measuring devices: ▪ Calculation of all the necessary data for identifying the optimum measuring device: e.g. pressure loss, accuracy or process connections. ▪ Graphic illustration of the calculation results Administration, documentation and access to all project-related data and parameters over the entire life cycle of a project. Applicator is available: Via the Internet: https://portal.endress.com/webapp/applicator
Configurator	Product Configurator - the tool for individual product configuration ▪ Up-to-the-minute configuration data ▪ Depending on the device: Direct input of measuring point-specific information such as measuring range or operating language ▪ Automatic verification of exclusion criteria ▪ Automatic creation of the order code and its breakdown in PDF or Excel output format ▪ Ability to order directly in the Endress+Hauser Online Shop The Configurator is available on the Endress+Hauser website: www.endress.com -> Click "Corporate" -> Select your country -> Click "Products" -> Select the product using the filters and the search field -> Open the product page -> The "Configure" button to the right of the product image opens the Product Configurator.
DeviceCare SFE100	Configuration tool for devices via fieldbus protocols and Endress+Hauser service protocols. DeviceCare is the tool developed by Endress+Hauser for the configuration of Endress+Hauser devices. All smart devices in a plant can be configured via a point-to-point or point-to-bus connection. The user-friendly menus enable transparent and intuitive access to the field devices. For details, see Operating Instructions BA00027S
FieldCare SFE500	FDT-based plant asset management tool from Endress+Hauser. It can configure all smart field units in your system and helps you manage them. By using the status information, it is also a simple but effective way of checking their status and condition. For details, see Operating Instructions BA00027S and BA00065S
W@M	Life cycle management for your plant W@M supports you with a wide range of software applications over the entire process: from planning and procurement, to the installation, commissioning and operation of the measuring devices. All the relevant device information, such as the device status, spare parts and device-specific documentation, is available for every device over the entire life cycle. The application already contains the data of your Endress+Hauser device. Endress+Hauser also takes care of maintaining and updating the data records. W@M is available: Via the Internet: www.endress.com/lifecyclemanagement

12.4 System components

Accessories	Description
RN221N	Active barrier with power supply for safe separation of 4 to 20 mA standard signal circuits. Has bidirectional HART® transmission and optional HART® diagnostics if transmitters are connected with monitoring of 4 to 20 mA signal or HART® status byte analysis and an E+H-specific diagnostic command. For details, see Technical Information TI073R/09
RIA15	Process display, digital loop-powered display for 4 to 20 mA circuit, panel mounting, with optional HART® communication. Displays 4 to 20 mA or up to 4 HART® process variables For details, see Technical Information TI01043K/09
Graphic Data Manager Memograph M	The Advanced Data Manager Memograph M is a flexible and powerful system for organizing process values. Optional HART® input cards are available, each with 4 inputs (4/8/12/16/20), with highly accurate process values from the HART® devices directly connected for the purpose of calculation and data logging. The measured process values are clearly presented on the display and logged safely, monitored for limit values and analyzed. Via common communication protocols, the measured and calculated values can be easily communicated to higher-level systems or individual plant modules can be interconnected. For details, see Technical Information TI01180R/09

13 Technical data

13.1 Input

Measured variable	Temperature (temperature-linear transmission behavior), resistance and voltage.

Resistance thermometer (RTD) as per standard	Designation	α	Measuring range limits	Min. span
IEC 60751:2008	Pt100 (1) Pt200 (2) Pt500 (3) Pt1000 (4)	0.003851	−200 to +850 °C (−328 to +1 562 °F) −200 to +850 °C (−328 to +1 562 °F) −200 to +500 °C (−328 to +932 °F) −200 to +250 °C (−328 to +482 °F)	10 K (18 °F)
JIS C1604:1984	Pt100 (5)	0.003916	−200 to +510 °C (−328 to +950 °F)	10 K (18 °F)
DIN 43760 IPTS-68	Ni100 (6) Ni120 (7)	0.006180	−60 to +250 °C (−76 to +482 °F) −60 to +250 °C (−76 to +482 °F)	10 K (18 °F)
GOST 6651-94	Pt50 (8) Pt100 (9)	0.003910	−185 to +1 100 °C (−301 to +2 012 °F) −200 to +850 °C (−328 to +1 562 °F)	10 K (18 °F)
OIML R84: 2003, GOST 6651-2009	Cu50 (10) Cu100 (11)	0.004280	−180 to +200 °C (−292 to +392 °F) −180 to +200 °C (−292 to +392 °F)	10 K (18 °F)
	Ni100 (12) Ni120 (13)	0.006170	−60 to +180 °C (−76 to +356 °F) −60 to +180 °C (−76 to +356 °F)	10 K (18 °F)
OIML R84: 2003, GOST 6651-94	Cu50 (14)	0.004260	−50 to +200 °C (−58 to +392 °F)	10 K (18 °F)
-	Pt100 (Callendar van Dusen) Nickel polynomial Copper polynomial	-	The measuring range limits are specified by entering the limit values that depend on the coefficients A to C and R0.	10 K (18 °F)
	▪ Type of connection: 2-wire, 3-wire or 4-wire connection, sensor current: ≤0.3 mA ▪ With 2-wire circuit, compensation of wire resistance possible (0 to 30 Ω) ▪ With 3-wire and 4-wire connection, sensor wire resistance up to max. 50 Ω per wire			
Resistance transmitter	Resistance Ω		10 to 400 Ω 10 to 2 000 Ω	10 Ω 10 Ω

Thermocouples as per standard	Designation	Measuring range limits		Min. span
IEC 60584, Part 1			Recommended temperature range:	
	Type A (W5Re-W20Re) (30)	0 to +2 500 °C (+32 to +4 532 °F)	0 to +2 500 °C (+32 to +4 532 °F)	50 K (90 °F)
	Type B (PtRh30-PtRh6) (31)	+40 to +1 820 °C (+104 to +3 308 °F)	+500 to +1 820 °C (+932 to +3 308 °F)	50 K (90 °F)
	Type E (NiCr-CuNi) (34)	−270 to +1 000 °C (−454 to +1 832 °F)	−150 to +1 000 °C (−238 to +1 832 °F)	50 K (90 °F)
	Type J (Fe-CuNi) (35)	−210 to +1 200 °C (−346 to +2 192 °F)	−150 to +1 200 °C (−238 to +2 192 °F)	50 K (90 °F)
	Type K (NiCr-Ni) (36)	−270 to +1 372 °C (−454 to +2 501 °F)	−150 to +1 200 °C (−238 to +2 192 °F)	50 K (90 °F)
	Type N (NiCrSi-NiSi) (37)	−270 to +1 300 °C (−454 to +2 372 °F)	−150 to +1 300 °C (−238 to +2 372 °F)	50 K (90 °F)
	Type R (PtRh13-Pt) (38)	−50 to +1 768 °C (−58 to +3 214 °F)	+50 to +1 768 °C (+122 to +3 214 °F)	50 K (90 °F)
	Type S (PtRh10-Pt) (39)	−50 to +1 768 °C (−58 to +3 214 °F)	+50 to +1 768 °C (+122 to +3 214 °F)	50 K (90 °F)
	Type T (Cu-CuNi) (40)	−260 to +400 °C (−436 to +752 °F)	−150 to +400 °C (−238 to +752 °F)	50 K (90 °F)
IEC 60584, Part 1; ASTM E988-96	Type C (W5Re-W26Re) (32)	0 to +2 315 °C (+32 to +4 199 °F)	0 to +2 000 °C (+32 to +3 632 °F)	50 K (90 °F)
ASTM E988-96	Type D (W3Re-W25Re) (33)	0 to +2 315 °C (+32 to +4 199 °F)	0 to +2 000 °C (+32 to +3 632 °F)	50 K (90 °F)
DIN 43710	Type L (Fe-CuNi) (41) Type U (Cu-CuNi) (42)	−200 to +900 °C (−328 to +1 652 °F) −200 to +600 °C (−328 to +1 112 °F)	−150 to +900 °C (−238 to +1 652 °F) −150 to +600 °C (−238 to +1 112 °F)	50 K (90 °F)
GOST R8.8585-2001	Type L (NiCr-CuNi) (43)	−200 to +800 °C (−328 to +1 472 °F)	−200 to +800 °C (+328 to +1 472 °F)	50 K (90 °F)

Thermocouples as per standard	Designation	Measuring range limits	Min. span
	▪ Internal cold junction (Pt100) ▪ External cold junction: configurable value −40 to +85 °C (−40 to +185 °F) ▪ Maximum sensor wire resistance 10 kΩ (If the sensor wire resistance is greater than 10 kΩ, an error message is output in accordance with NAMUR NE89.)		
Voltage transmitter (mV)	Millivolt transmitter (mV)	−20 to 100 mV	5 mV

13.2 Output

Output signal

Analog output	4 to 20 mA, 20 to 4 mA (can be inverted)
Signal encoding	FSK ±0.5 mA via current signal
Data transmission rate	1200 baud
Galvanic isolation	U = 2 kV AC (input/output)

Failure information

Failure information as per NAMUR NE43:

Failure information is created if the measuring information is missing or not valid. A complete list of all the errors occurring in the measuring system is created.

Underranging	Linear drop from 4.0 to 3.8 mA
Overranging	Linear increase from 20.0 to 20.5 mA
Failure e.g. sensor failure; sensor short-circuit	≤ 3.6 mA ("low") or ≥ 21 mA ("high"), can be selected The "high" alarm setting can be set between 21.5 mA and 23 mA, thus providing the flexibility needed to meet the requirements of various control systems. Only the "low" alarm setting is possible in the SIL mode.

Load

$R_{b\ max.} = (U_{b\ max.} - 10\ V) / 0.023\ A$ (current output). Valid for head transmitter

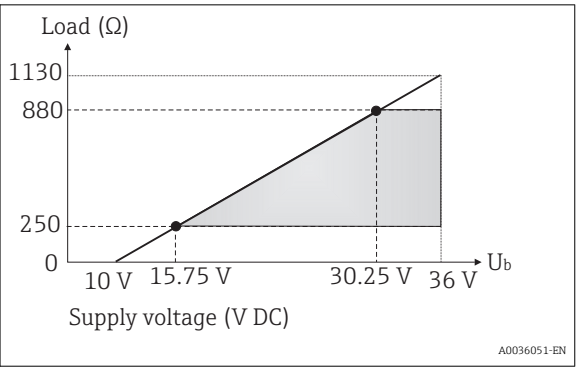

Linearization/transmission behavior

Temperature-linear, resistance-linear, voltage-linear

Network frequency filter

50/60 Hz

Filter

1st order digital filter: 0 to 120 s

Protocol-specific data

Manufacturer ID	17 (0x11)
Device type ID	0x11D0

HART® specification	7
Device address in multi-drop mode	Software setting addresses0 to 63
Device description files (DTM, DD)	Information and files under: www.endress.com www.fieldcommgroup.org
HART load	min. 250 Ω
HART device variables	**Measured value for primary process value (PV)** Sensor (measured value) **Measured values for SV, TV, QV (second, third and fourth device variable)** ▪ SV: Device temperature ▪ TV: Sensor (measured value) ▪ QV: Sensor (measured value)
Supported functions	▪ Squawk ▪ Condensed status

Wireless HART data

Minimum starting voltage	10 V_{DC}
Start-up current	3.58 mA
Starting time	7 s
Minimum operating voltage	10 V_{DC}
Multidrop current	4.0 mA
Time for connection setup	9 s

Write protection for device parameters

▪ Hardware: Write protection for head transmitter on optional display using DIP switch
▪ Software: User role concept (password definition)

Switch-on delay

≤ 7 s until the first valid measured value signal is present at the current output and until start of HART® communication. While switch-on delay = I_a ≤ 3.8 mA

13.3 Power supply

Supply voltage

Values for non-hazardous areas, protected against polarity reversal:
Head transmitter: 10 V ≤ Vcc ≤ 36 V

Values for hazardous areas, see Ex documentation .

Current consumption

▪ 3.6 to 23 mA
▪ Minimum current consumption 3.5 mA
▪ Current limit ≤ 23 mA

Terminals

Terminal version	Cable version	Cable cross-section
Screw terminals	Rigid or flexible	≤ 2.5 mm² (14 AWG)

13.4 Performance characteristics

Response time

The measured value update depends on the type of sensor and connection method and moves within the following ranges:

Resistance thermometer (RTD)	1 s
Thermocouples (TC)	1 s
Reference temperature	0.9 s

When recording step responses, it must be taken into account that the times the internal reference measuring point are added to the specified times where applicable.

Reference operating conditions

- Calibration temperature: +25 °C ±3 K (77 °F ±5.4 °F)
- Supply voltage: 24 V DC
- 4-wire circuit for resistance adjustment

Maximum measured error

In accordance with DIN EN 60770 and the reference conditions specified above. The measured error data correspond to ±2 σ (Gaussian distribution). The data include non-linearities and repeatability.

Typical

Standard	Designation	Measuring range	Typical measured error (±)	
Resistance thermometer (RTD) as per standard			Digital value [1]	Value at current output
IEC 60751:2008	Pt100 (1)	0 to +200 °C (32 to +392 °F)	0.07 °C (0.13 °F)	0.10 °C (0.18 °F)
IEC 60751:2008	Pt1000 (4)		0.05 °C (0.09 °F)	0.08 °C (0.14 °F)
GOST 6651-94	Pt100 (9)		0.06 °C (0.11 °F)	0.09 °C (0.16 °F)
Thermocouples (TC) as per standard			Digital value	Value at current output
IEC 60584, Part 1	Type K (NiCr-Ni) (36)	0 to +800 °C (32 to +1 472 °F)	0.60 °C (1.08 °F)	0.64 °C (1.15 °F)
IEC 60584, Part 1	Type S (PtRh10-Pt) (39)		1.83 °C (3.29 °F)	1.84 °C (3.31 °F)
GOST R8.8585-2001	Type L (NiCr-CuNi) (43)		2.45 °C (4.41 °F)	2.46 °C (4.43 °F)

1) Measured value transmitted via HART®.

Measured error for resistance thermometers (RTD) and resistance transmitters

Standard	Designation	Measuring range	Measured error (±)		
			Digital [1]		D/A [2]
			Maximum [3]	Based on measured value [4]	
IEC 60751:2008	Pt100 (1)	−200 to +850 °C (−328 to +1 562 °F)	≤ 0.1 °C (0.19 °F)	ME = ± (0.05 °C (0.09 °F) + 0.006% * (MV - LRV))	0.03 % (≙ 4.8 µA)
	Pt200 (2)		≤ 0.20 °C (0.36 °F)	ME = ± (0.08 °C (0.14 °F) + 0.011% * (MV - LRV))	
	Pt500 (3)	−200 to +510 °C (−328 to +950 °F)	≤ 0.1 °C (0.19 °F)	ME = ± (0.035 °C (0.063 °F) + 0.008% * (MV - LRV))	
	Pt1000 (4)	−200 to +250 °C (−328 to +482 °F)	≤ 0.06 °C (0.11 °F)	ME = ± (0.02 °C (0.04 °F) + 0.007% * (MV - LRV))	

Standard	Designation	Measuring range	Measured error (±)		
			Digital [1]		D/A [2]
JIS C1604:1984	Pt100 (5)	−200 to +510 °C (−328 to +950 °F)	≤ 0.09 °C (0.16 °F)	ME = ± (0.05 °C (0.09 °F) + 0.006% * (MV - LRV))	
GOST 6651-94	Pt50 (8)	−185 to +1 100 °C (−301 to +2 012 °F)	≤ 0.18 °C (0.32 °F)	ME = ± (0.07 °C (0.13 °F) + 0.008% * (MV - LRV))	
	Pt100 (9)	−200 to +850 °C (−328 to +1 562 °F)	≤ 0.11 °C (0.2 °F)	ME = ± (0.05 °C (0.09 °F) + 0.006% * (MV - LRV))	0.03 % (≙ 4.8 µA)
DIN 43760 IPTS-68	Ni100 (6)	−60 to +250 °C (−76 to +482 °F)	≤ 0.04 °C (0.07 °F)	ME = ± (0.04 °C (0.07 °F) - 0.004% * (MV- LRV))	
	Ni120 (7)				
OIML R84: 2003 / GOST 6651-2009	Cu50 (10)	−180 to +200 °C (−292 to +392 °F)	≤ 0.10 °C (0.19 °F)	ME = ± (0.08 °C (0.14 °F) + 0.006% * (MV - LRV))	
	Cu100 (11)	−180 to +200 °C (−292 to +392 °F)	≤ 0.06 °C (0.11 °F)	ME = ± (0.04 °C (0.07 °F) + 0.003% * (MV - LRV))	
	Ni100 (12)	−60 to +180 °C (−76 to +356 °F)	≤ 0.04 °C (0.07 °F)	ME = ± (0.04 °C (0.07 °F) - 0.004% * (MV- LRV))	
	Ni120 (13)				
OIML R84: 2003, GOST 6651-94	Cu50 (14)	−50 to +200 °C (−58 to +392 °F)	≤ 0.10 °C (0.18 °F)	ME = ± (0.09 °C (0.16 °F) + 0.004% * (MV - LRV))	
Resistance transmitter	Resistance Ω	10 to 400 Ω	29.5mΩ	ME = ± (17 mΩ + 0.0034 % * (MV - LRV))	0.03 % (≙ 4.8 µA)
		10 to 2 000 Ω	179.4mΩ	ME = ± (60 mΩ + 0.006 % * (MV - LRV))	

1) Measured value transmitted via HART®.
2) Percentages based on the configured span of the analog output signal.
3) Maximum measured error for the specified measuring range.
4) Deviations from maximum measured error possible due to rounding.

Measured error for thermocouples (TC) and voltage transmitters

Standard	Designation	Measuring range	Measured error (±)		
			Digital [1]		D/A [2]
			Maximum [3]	Based on measured value [4]	
IEC 60584-1	Type A (30)	0 to +2 500 °C (+32 to +4 532 °F)	≤ 1.65 °C (2.97 °F)	ME = ± (1.0 °C (1.8 °F) + 0.018% * (MV - LRV))	
	Type B (31)	+500 to +1 820 °C (+932 to +3 308 °F)	≤ 2.1 °C (3.8 °F)	ME = ± (2.1 °C (3.8 °F) - 0.055% * (MV- LRV))	
IEC 60584-1 / ASTM E988-96	Type C (32)	0 to +2 000 °C (+32 to +3 632 °F)	≤ 0.86 °C (1.55 °F)	ME = ± (0.75 °C (1.35 °F) + 0.0055% * (MV - LRV))	
ASTM E988-96	Type D (33)		≤ 1.1 °C (1.98 °F)	ME = ± (1.1 °C (1.98 °F) - 0.008% * (MV- LRV))	0.03 % (≙ 4.8 µA)
IEC 60584-1	Type E (34)	−150 to +1 000 °C (−238 to +1 832 °F)	≤ 0.3 °C (0.54 °F)	ME = ± (0.3 °C (0.54 °F) - 0.006% * (MV- LRV))	
	Type J (35)	−150 to +1 200 °C (−238 to +2 192 °F)	≤ 0.36 °C (0.65 °F)	ME = ± (0.36 °C (0.65 °F) - 0.005% * (MV- LRV))	
	Type K (36)		≤ 0.5 °C (0.9 °F)	ME = ± (0.5 °C (0.9 °F) - 0.005% * (MV- LRV))	
	Type N (37)	−150 to +1 300 °C (−238 to +2 372 °F)	≤ 0.7 °C (1.26 °F)	ME = ± (0.7 °C (1.26 °F) - 0.014% * (MV- LRV))	
	Type R (38)	+50 to +1 768 °C (+122 to +3 214 °F)	≤ 1.6 °C (2.88 °F)	ME = ± (1.6 °C (2.88 °F) - 0.026% * (MV- LRV))	0.03 % (≙ 4.8 µA)
	Type S (39)		≤ 1.6 °C (2.88 °F)	ME = ± (1.6 °C (2.88 °F) - 0.022% * (MV- LRV))	

Standard	Designation	Measuring range	Measured error (±)		
			Digital [1]		D/A [2]
	Type T (40)	−150 to +400 °C (−238 to +752 °F)	≤ 0.5 °C (0.9 °F)	ME = ± (0.5 °C (0.9 °F) - 0.04% * (MV- LRV))	
DIN 43710	Type L (41)	−150 to +900 °C (−238 to +1652 °F)	≤ 0.39 °C (0.7 °F)	ME = ± (0.39 °C (0.7 °F) - 0.008% * (MV- LRV))	
	Type U (42)	−150 to +600 °C (−238 to +1112 °F)	≤ 0.45 °C (0.81 °F)	ME = ± (0.45 °C (0.81 °F) - 0.025% * (MV- LRV))	
GOST R8.8585-2001	Type L (43)	−200 to +800 °C (−328 to +1472 °F)	≤ 2.30 °C (4.14 °F)	ME = ± (2.3 °C (4.14 °F) - 0.015% * (MV- LRV))	
Voltage transmitter (mV)		−20 to +100 mV	10.0 µV	ME = ± (10.0 µV + 0.0018% * (MV - LRV))	4.8 µA

1) Measured value transmitted via HART®.
2) Percentages based on the configured span of the analog output signal.
3) Maximum measured error for the specified measuring range.
4) Deviations from maximum measured error possible due to rounding.

MV = Measured value

LRV = Lower range value of relevant sensor

Total measured error of transmitter at current output = √(Measured error digital^2 + Measured error D/A^2)

Sample calculation with Pt100, measuring range 0 to +200 °C (+32 to +392 °F), ambient temperature +25 °C (+77 °F), supply voltage 24 V:

Measured error digital = 0.05 °C + 0.006% x (200 °C - (-200 °C)):	0.07 °C (0.126 °F)
Measured error D/A = 0.003 % x 200 °C (360 °F)	0.06 °C (0.108 °F)
Measured error digital value (HART):	0.07 °C (0.126 °F)
Measured error analog value (current output): √(Measured error digital^2 + Measured error D/A^2)	0.10 °C (0.18 °F)

Sample calculation with Pt100, measuring range 0 to +200 °C (+32 to +392 °F), ambient temperature +35 °C (+95 °F), supply voltage 30 V:

Measured error digital = 0.04 °C + 0.006% x (200 °C - (-200 °C)):	0.07 °C (0.126 °F)
Measured error D/A = 0.03 % x 200 °C (360 °F)	0.06 °C (0.108 °F)
Influence of ambient temperature (digital) = (35 - 25) x (0.0013 % x 200 °C - (-200 °C)), min. 0.003 °C	0.05 °C (0.09 °F)
Influence of ambient temperature (D/A) = (35 - 25) x (0.003% x 200 °C)	0.06 °C (0.108 °F)
Influence of supply voltage (digital) = (30 - 24) x (0.0007% x 200 °C - (-200 °C)), min. 0.005 °C	0.02 °C (0.036 °F)
Influence of supply voltage (D/A) = (30 - 24) x (0.003% x 200 °C)	0.04 °C (0.72 °F)
Measured error digital value (HART): √(Measured error digital^2 + Influence of ambient temperature (digital)^2 + Influence of supply voltage (digital)^2	**0.10 °C (0.18 °F)**
Measured error analog value (current output): √(Measured error digital^2 + Measured error D/A^2 + Influence of ambient temperature (digital)^2 + Influence of ambient temperature (D/A)^2 + Influence of supply voltage (digital)^2 + Influence of supply voltage (D/A)^2	**0.13 °C (0.23 °F)**

The measured error data correspond to 2 σ (Gaussian distribution).

MV = Measured value

LRV = Lower range value of relevant sensor

Physical input measuring range of sensors	
10 to 400 Ω	Cu50, Cu100, polynomial RTD, Pt50, Pt100, Ni100, Ni120
10 to 2 000 Ω	Pt200, Pt500, Pt1000
–20 to 100 mV	Thermocouples type: A, B, C, D, E, J, K, L, N, R, S, T, U

Sensor adjustment

Sensor transmitter matching

RTD sensors are one of the most linear temperature measuring elements. Nevertheless, the output must be linearized. To significantly improve temperature measurement accuracy, the device allows the use of two methods:

- Callendar-Van Dusen coefficients (Pt100 resistance thermometer)
  The Callendar-Van Dusen equation is described as:
  $R_T = R_0[1+AT+BT^2+C(T-100)T^3]$

  The coefficients A, B and C are used to match the sensor (platinum) and transmitter in order to improve the accuracy of the measuring system. The coefficients for a standard sensor are specified in IEC 751. If no standard sensor is available or if greater accuracy is required, the coefficients for each sensor can be determined specifically with the aid of sensor calibration.

- Linearization for copper/nickel resistance thermometers (RTD)
  The polynomial equation for copper/nickel is as follows:
  $R_T = R_0(1+AT+BT^2)$

  The coefficients A and B are used for the linearization of nickel or copper resistance thermometers (RTD). The exact values of the coefficients derive from the calibration data and are specific to each sensor. The sensor-specific coefficients are then sent to the transmitter.

Sensor transmitter matching using one of the methods explained above significantly improves the temperature measurement accuracy of the entire system. This is because the transmitter uses the specific data pertaining to the connected sensor to calculate the measured temperature, instead of using the standardized sensor curve data.

1-point adjustment (offset)

Shifts the sensor value

Current output adjustment

Correction of the 4 or 20 mA current output value.

Operating influences

The measured error data correspond to 2 σ (Gaussian distribution).

Influence of ambient temperature and supply voltage on operation for resistance thermometers (RTD) and resistance transmitters

Designation	Standard	Ambient temperature: Influence (±) per 1 °C (1.8 °F) change			Supply voltage: Influence (±) per V change		
		Digital [1]		D/A [2]	Digital		D/A
		Maximum	Based on measured value		Maximum	Based on measured value	
Pt100 (1)	IEC 60751:2008	≤ 0.013 °C (0.023 °F)	0.0013% * (MV - LRV), at least 0.003 °C (0.005 °F)	0.003 %	≤ 0.007 °C (0.013 °F)	0.0007% * (MV - LRV), at least 0.003 °C (0.005 °F)	0.003 %

Designation	Standard	Ambient temperature: Influence (±) per 1 °C (1.8 °F) change			Supply voltage: Influence (±) per V change		
		Digital [1]		D/A [2]	Digital		D/A
Pt200 (2)		≤ 0.017 °C (0.031 °F)	-		≤ 0.009 °C (0.016 °F)	-	
Pt500 (3)		≤ 0.008 °C (0.014 °F)	0.0013% * (MV - LRV), at least 0.006 °C (0.011 °F)		≤ 0.004 °C (0.007 °F)	0.0007% * (MV - LRV), at least 0.006 °C (0.011 °F)	
Pt1000 (4)		≤ 0.005 °C (0.009 °F)	-		≤ 0.003 °C (0.005 °F)	-	
Pt100 (5)	JIS C1604:1984	≤ 0.009 °C (0.016 °F)	0.0013% * (MV - LRV), at least 0.003 °C (0.005 °F)		≤ 0.004 °C (0.007 °F)	0.0007% * (MV - LRV), at least 0.003 °C (0.005 °F)	
Pt50 (8)	GOST 6651-94	≤ 0.017 °C (0.031 °F)	0.0015% * (MV - LRV), at least 0.01 °C (0.018 °F)		≤ 0.009 °C (0.016 °F)	0.0007% * (MV - LRV), at least 0.01 °C (0.018 °F)	
Pt100 (9)		≤ 0.013 °C (0.023 °F)	0.0013% * (MV - LRV), at least 0.003 °C (0.005 °F)		≤ 0.007 °C (0.013 °F)	0.0007% * (MV - LRV), at least 0.003 °C (0.005 °F)	
Ni100 (6)	DIN 43760 IPTS-68	≤ 0.003 °C (0.005 °F)	-		≤ 0.001 °C (0.002 °F)	-	
Ni120 (7)			-			-	
Cu50 (10)	OIML R84: 2003 / GOST 6651-2009	≤ 0.005 °C (0.009 °F)	-		≤ 0.005 °C (0.009 °F)	-	
Cu100 (11)		≤ 0.004 °C (0.007 °F)	-	0.003 %	≤ 0.004 °C (0.007 °F)	-	0.003 %
Ni100 (12)		≤ 0.003 °C (0.005 °F)	-		≤ 0.003 °C (0.005 °F)	-	
Ni120 (13)			-			-	
Cu50 (14)	OIML R84: 2003 / GOST 6651-94	≤ 0.005 °C (0.009 °F)	-		≤ 0.005 °C (0.009 °F)	-	
Resistance transmitter (Ω)							
10 to 400 Ω		≤ 4 mΩ	0.001% * MV, at least 1 mΩ	0.003 %	≤ 2 mΩ	0.0005% * MV, at least 1 mΩ	0.003 %
10 to 2 000 Ω		≤ 20 mΩ	0.001% * MV, at least 10 mΩ		≤ 10 mΩ	0.0005% * MV, at least 5 mΩ	

1) Measured value transmitted via HART®.
2) Percentages based on the configured span of the analog output signal

Influence of ambient temperature and supply voltage on operation for thermocouples (TC) and voltage transmitters

Designation	Standard	Ambient temperature: Influence (±) per 1 °C (1.8 °F) change			Supply voltage: Influence (±) per V change		
		Digital [1]		D/A [2]	Digital		D/A
		Maximum	Based on measured value		Maximum	Based on measured value	
Type A (30)	IEC 60584-1	≤ 0.07 °C (0.126 °F)	0.003% * (MV - LRV), at least 0.01 °C (0.018 °F)		≤ 0.03 °C (0.054 °F)	0.0012% * (MV - LRV), at least 0.013 °C (0.023 °F)	
Type B (31)		≤ 0.04 °C (0.072 °F)	-		≤ 0.02 °C (0.036 °F)	-	
Type C (32)	IEC 60584-1 / ASTM E988-96	≤ 0.04 °C (0.072 °F)	0.0021% * (MV - LRV), at least 0.01 °C (0.018 °F)		≤ 0.02 °C (0.036 °F)	0.0012% * (MV - LRV), at least 0.013 °C (0.023 °F)	
Type D (33)	ASTM E988-96	≤ 0.04 °C (0.072 °F)	0.0019% * (MV - LRV), at least 0.01 °C (0.018 °F)	0.003 %	≤ 0.02 °C (0.036 °F)	0.0011% * (MV - LRV), at least 0.0 °C (0.0 °F)	0.003 %
Type E (34)	IEC 60584-1	≤ 0.02 °C (0.036 °F)	0.0014% * (MV - LRV), at least 0.0 °C (0.0 °F)		≤ 0.01 °C (0.018 °F)	0.0008% * (MV - LRV), at least 0.0 °C (0.0 °F)	
Type J (35)			0.0014% * (MV - LRV), at least 0.0 °C (0.0 °F)			0.0008% * MV, at least 0.0 °C (0.0 °F)	

Designation	Standard	Ambient temperature: Influence (±) per 1 °C (1.8 °F) change			Supply voltage: Influence (±) per V change		
		Digital [1]		D/A [2]	Digital		D/A
Type K (36)		≤ 0.02 °C (0.036 °F)	0.0015% * (MV - LRV), at least 0.0 °C (0.0 °F)		≤ 0.01 °C (0.018 °F)	0.0009% * (MV - LRV), at least 0.0 °C (0.0 °F)	
Type N (37)			0.0014% * (MV - LRV), at least 0.010 °C (0.018 °F)	0.003 %		0.0008% * MV, at least 0.0 °C (0.0 °F)	0.003 %
Type R (38)		≤ 0.03 °C (0.054 °F)	-		≤ 0.02 °C (0.036 °F)	-	
Type S (39)			-			-	
Type T (40)		≤ 0.01 °C (0.018 °F)	-		0.0 °C (0.0 °F)	-	
Type L (41)	DIN 43710		-		≤ 0.01 °C (0.018 °F)	-	
Type U (42)			-		0.0 °C (0.0 °F)	-	
Type L (43)	GOST R8.8585-2001		-		≤ 0.01 °C (0.018 °F)	-	
Voltage transmitter (mV)				0.003 %			0.003 %
−20 to 100 mV	-	≤ 1.5 µV	0.0015% * MV		≤ 0.8 µV	0.0008% * MV	

1) Measured value transmitted via HART®.
2) Percentages based on the configured span of the analog output signal

MV = Measured value

LRV = Lower range value of relevant sensor

Total measured error of transmitter at current output = √(Measured error digital² + Measured error D/A²)

Long-term drift, resistance thermometers (RTD) and resistance transmitters

Designation	Standard	Long-term drift (±) [1]				
		after 1 month	after 6 months	after 1 year	after 3 years	after 5 years
		Based on measured value				
Pt100 (1)	IEC 60751:2008	≤ 0.039% * (MV - LRV) or 0.01 °C (0.02 °F)	≤ 0.061% * (MV - LRV) or 0.02 °C (0.04 °F)	≤ 0.007% * (MV - LRV) or 0.02 °C (0.04 °F)	≤ 0.0093% * (MV - LRV) or 0.03 °C (0.05 °F)	≤ 0.0102% * (MV - LRV) or 0.03 °C (0.05 °F)
Pt200 (2)		0.05 °C (0.09 °F)	0.05 °C (0.09 °F)	0.09 °C (0.17 °F)	0.12 °C (0.27 °F)	0.13 °C (0.24 °F)
Pt500 (3)		≤ 0.048% * (MV - LRV) or 0.01 °C (0.02 °F)	≤ 0.0075% * (MV - LRV) or 0.02 °C (0.04 °F)	≤ 0.068% * (MV - LRV) or 0.03 °C (0.06 °F)	≤ 0.011% * (MV - LRV) or 0.03 °C (0.05 °F)	≤ 0.0124% * (MV - LRV) or 0.04 °C (0.07 °F)
Pt1000 (4)			≤ 0.0077% * (MV - LRV) or 0.02 °C (0.04 °F)	≤ 0.0088% * (MV - LRV) or 0.02 °C (0.04 °F)	≤ 0.0114% * (MV - LRV) or 0.03 °C (0.05 °F)	≤ 0.013% * (MV - LRV) or 0.03 °C (0.05 °F)
Pt100 (5)	JIS C1604:1984	≤ 0.039% * (MV - LRV) or 0.01 °C (0.02 °F)	≤ 0.0061% * (MV - LRV) or 0.02 °C (0.04 °F)	≤ 0.007% * (MV - LRV) or 0.02 °C (0.04 °F)	≤ 0.0093% * (MV - LRV) or 0.03 °C (0.05 °F)	≤ 0.0102% * (MV - LRV) or 0.03 °C (0.05 °F)
Pt50 (8)	GOST 6651-94	≤ 0.042% * (MV - LRV) or 0.02 °C (0.04 °F)	≤ 0.0068% * (MV - LRV) or 0.04 °C (0.07 °F)	≤ 0.0076% * (MV - LRV) or 0.04 °C (0.08 °F)	≤ 0.01% * (MV - LRV) or 0.06 °C (0.11 °F)	≤ 0.011% * (MV - LRV) or 0.07 °C (0.12 °F)
Pt100 (9)		≤ 0.016% * (MV - LRV) or 0.04 °C (0.07 °F)	≤ 0.0061% * (MV - LRV) or 0.02 °C (0.04 °F)	≤ 0.007% * (MV - LRV) or 0.02 °C (0.04 °F)	≤ 0.0093% * (MV - LRV) or 0.03 °C (0.05 °F)	≤ 0.0102% * (MV - LRV) or 0.03 °C (0.05 °F)
Ni100 (6)	DIN 43760 IPTS-68	0.01 °C (0.02 °F)	0.01 °C (0.02 °F)	0.02 °C (0.04 °F)	0.02 °C (0.04 °F)	0.02 °C (0.04 °F)

Designation	Standard	Long-term drift (±) [1]				
Ni120 (7)						
Cu50 (10)	OIML R84: 2003 / GOST 6651-2009	0.02 °C (0.04 °F)	0.03 °C (0.05 °F)	0.04 °C (0.07 °F)	0.05 °C (0.09 °F)	0.05 °C (0.09 °F)
Cu100 (11)		0.01 °C (0.02 °F)	0.02 °C (0.04 °F)	0.02 °C (0.04 °F)	0.03 °C (0.05 °F)	0.04 °C (0.07 °F)
Ni100 (12)			0.01 °C (0.02 °F)	0.02 °C (0.04 °F)	0.02 °C (0.04 °F)	0.02 °C (0.04 °F)
Ni120 (13)						
Cu50 (14)	OIML R84: 2003 / GOST 6651-94	0.02 °C (0.04 °F)	0.03 °C (0.05 °F)	0.04 °C (0.07 °F)	0.05 °C (0.09 °F)	0.05 °C (0.09 °F)
Resistance transmitter						
10 to 400 Ω		≤ 0.003% * MV or 4 mΩ	≤ 0.0048% * MV or 6 mΩ	≤ 0.0055% * MV or 7 mΩ	≤ 0.0073% * MV or 10 mΩ	≤ 0.008% * (MV - LRV) or 11 mΩ
10 to 2 000 Ω		≤ 0.0038% * MV or 25 mΩ	≤ 0.006% * MV or 40 mΩ	≤ 0.007% * (MV - LRV) or 47 mΩ	≤ 0.009% * (MV - LRV) or 60 mΩ	≤ 0.0067% * (MV - LRV) or 67 mΩ

1) Whichever is greater

Long-term drift, thermocouples (TC) and voltage transmitters

Designation	Standard	Long-term drift (±) [1]				
		after 1 month	after 6 months	after 1 year	after 3 years	after 5 years
		Based on measured value				
Type A (30)	IEC 60584-1	≤ 0.021% * (MV - LRV) or 0.34 °C (0.61 °F)	≤ 0.037% * (MV - LRV) or 0.59 °C (1.06 °F)	≤ 0.044% * (MV - LRV) or 0.70 °C (1.26 °F)	≤ 0.058% * (MV - LRV) or 0.93 °C (1.67 °F)	≤ 0.063% * (MV - LRV) or 1.01 °C (1.82 °F)
Type B (31)		0.80 °C (1.44 °F)	1.40 °C (2.52 °F)	1.66 °C (2.99 °F)	2.19 °C (3.94 °F)	2.39 °C (4.30 °F)
Type C (32)	IEC 60584-1 / ASTM E988-96	0.34 °C (0.61 °F)	0.58 °C (1.04 °F)	0.70 °C (1.26 °F)	0.92 °C (1.66 °F)	1.00 °C (1.80 °F)
Type D (33)	ASTM E988-96	0.42 °C (0.76 °F)	0.73 °C (1.31 °F)	0.87 °C (1.57 °F)	1.15 °C (2.07 °F)	1.26 °C (2.27 °F)
Type E (34)	IEC 60584-1	0.13 °C (0.23 °F)	0.22 °C (0.40 °F)	0.26 °C (0.47 °F)	0.34 °C (0.61 °F)	0.37 °C (0.67 °F)
Type J (35)		0.15 °C (0.27 °F)	0.26 °C (0.47 °F)	0.31 °C (0.56 °F)	0.41 °C (0.74 °F)	0.44 °C (0.79 °F)
Type K (36)		0.17 °C (0.31 °F)	0.30 °C (0.54 °F)	0.36 °C (0.65 °F)	0.47 °C (0.85 °F)	0.51 °C (0.92 °F)
Type N (37)		0.25 °C (0.45 °F)	0.44 °C (0.79 °F)	0.52 °C (0.94 °F)	0.69 °C (1.24 °F)	0.75 °C (1.35 °F)
Type R (38)		0.62 °C (1.12 °F)	1.08 °C (1.94 °F)	1.28 °C (2.30 °F)	1.69 °C (3.04 °F)	1.85 °C (3.33 °F)
Type S (39)				1.29 °C (2.32 °F)	1.70 °C (3.06 °F)	
Type T (40)		0.18 °C (0.32 °F)	0.32 °C (0.58 °F)	0.38 °C (0.68 °F)	0.50 °C (0.90 °F)	0.54 °C (0.97 °F)
Type L (41)	DIN 43710	0.12 °C (0.22 °F)	0.21 °C (0.38 °F)	0.25 °C (0.45 °F)	0.33 °C (0.59 °F)	0.36 °C (0.65 °F)
Type U (42)		0.18 °C (0.32 °F)	0.31 °C (0.56 °F)	0.37 °C (0.67 °F)	0.49 °C (0.88 °F)	0.53 °C (0.95 °F)
Type L (43)	GOST R8.8585-2001	0.15 °C (0.27 °F)	0.26 °C (0.47 °F)	0.31 °C (0.56 °F)	0.41 °C (0.74 °F)	0.44 °C (0.79 °F)
Voltage transmitter (mV)						
– 20 to 100 mV		≤ 0.012% * MV or 4 µV	≤ 0.021% * MV or 7 µV	≤ 0.025% * MV or 8 µV	≤ 0.033% * MV or 11 µV	≤ 0.036% * MV or 12 µV

1) Whichever is greater

Analog output long-term drift

D/A long-term drift [1] (±)				
after 1 month	after 6 months	after 1 year	after 3 years	after 5 years
0.018%	0.026%	0.030%	0.036%	0.038%

1) Percentages based on the configured span of the analog output signal.

Influence of the reference junction

Pt100 DIN IEC 60751 Cl. B (internal reference junction with thermocouples TC)

If an external 2-wire RTD is used for the reference junction measurement, the measured error caused by the transmitter is < 0.5 °C (0.9 °F). The measured error of the sensor element also needs to be added.

13.5 Environment

Ambient temperature range

−40 to +85 °C (−40 to +185 °F), for hazardous areas see Ex documentation

Storage temperature

Head transmitter: −50 to +100 °C (−58 to +212 °F)

Altitude

Up to 4000 m (4374.5 yards) above mean sea level as per IEC 61010-1, CAN/CSA C22.2 No. 61010-1

Humidity

- Condensation as per IEC 60 068-2-33:
  Head transmitter permitted
- Max. rel. humidity: 95% as per IEC 60068-2-30

Climate class

Head transmitter: climate class C1 as per EN 60654-1

Degree of protection

- Head transmitter with screw terminals: IP 00. In installed state, depends on the terminal head or field housing used.
- When installing in field housing TA30A, TA30D or TA30H: IP 66/68 (NEMA Type 4x encl.)

Shock and vibration resistance

Vibration resistance as per DNVGL-CG-0339 : 2015 and DIN EN 60068-2-27
Head transmitter: 2 to 100 Hz at 4g (increased vibration stress)

Shock resistance as per KTA 3505 (section 5.8.4 Shock test)

Electromagnetic compatibility (EMC)

CE compliance

Electromagnetic compatibility in accordance with all the relevant requirements of the IEC/EN 61326 series and NAMUR Recommendation EMC (NE21). For details, refer to the Declaration of Conformity. All tests were passed both with and without ongoing digital HART® communication.

Maximum measured error <1% of measuring range.

Interference immunity as per IEC/EN 61326 series, industrial requirements

Interference emission as per IEC/EN 61326 series, Class B equipment

Measuring category	Measuring category II as per IEC 61010-1. The measuring category is provided for measuring on power circuits that are directly connected electrically with the low-voltage network.
Degree of contamination	Pollution degree 2 as per IEC 61010-1.

13.6 Mechanical construction

Design, dimensions

Dimensions in mm (in)

Head transmitter

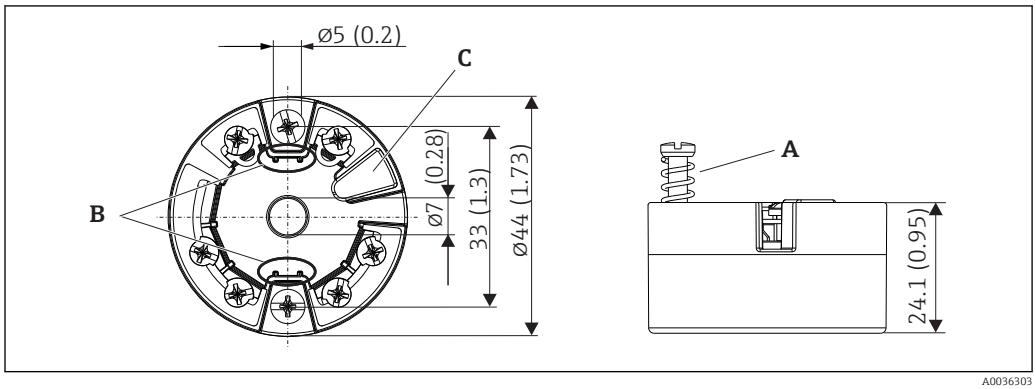

14 Version with screw terminals

A Spring travel L ≥ 5 mm (not for US - M4 securing screws)
B Mounting elements for attachable measured value display TID10
C Service interface for connecting measured value display or configuration tool

Field housing

All field housings have an internal geometry in accordance with DIN EN 50446, form B (flat face). Cable glands in the diagrams: M20x1.5

Maximum ambient temperatures for cable glands	
Type	**Temperature range**
Polyamide cable gland ½" NPT, M20x1.5 (non-Ex)	−40 to +100 °C (−40 to 212 °F)
Polyamide cable gland M20x1.5 (for dust ignition-proof area)	−20 to +95 °C (−4 to 203 °F)
Brass cable gland ½" NPT, M20x1.5 (for dust ignition-proof area)	−20 to +130 °C (−4 to +266 °F)

TA30A	Specification
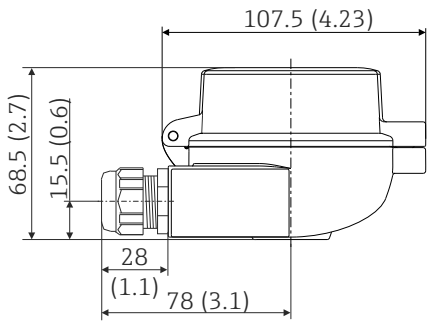	▪ Two cable entries ▪ Temperature: −50 to +150 °C (−58 to +302 °F) without cable gland ▪ Material: aluminum, polyester powder coated Seals: silicone ▪ Cable entry glands: 1/2" NPT and M20x1.5 ▪ Color of head: blue, RAL 5012 ▪ Color of cap: gray, RAL 7035 ▪ Weight: 330 g (11.64 oz)

TA30A with display window in cover	Specification
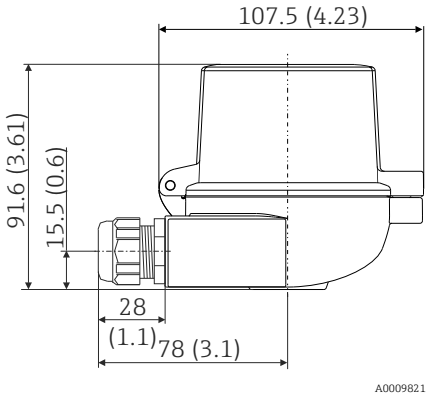	▪ Two cable entries ▪ Temperature: −50 to +150 °C (−58 to +302 °F) without cable gland ▪ Material: aluminum, polyester powder coated Seals: silicone ▪ Cable entry glands: 1/2" NPT and M20x1.5 ▪ Color of head: blue, RAL 5012 ▪ Color of cap: gray, RAL 7035 ▪ Weight: 420 g (14.81 oz)

TA30H	Specification
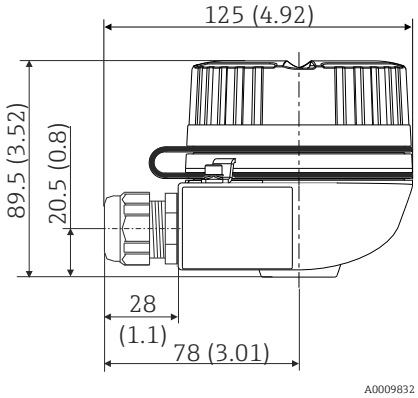	▪ Flameproof (XP) version, explosion-protected, captive screw cap, with two cable entries ▪ Temperature: −50 to +150 °C (−58 to +302 °F) for rubber seal without cable gland (observe max. permitted temperature of cable gland!) ▪ Material: – Aluminum with polyester powder coating – Stainless steel 316L without coating ▪ Cable entry glands: ½" NPT, M20x1.5 ▪ Color of aluminum head: blue, RAL 5012 ▪ Color of aluminum cap: gray, RAL 7035 ▪ Weight: – Aluminum: approx. 640 g (22.6 oz) – Stainless steel: approx. 2 400 g (84.7 oz)

TA30H with display window in cover	Specification
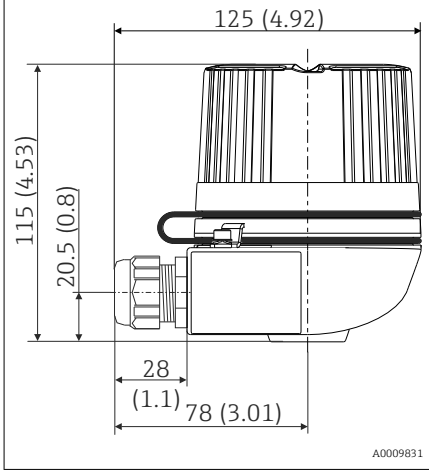	▪ Flameproof (XP) version, explosion-protected, captive screw cap, with two cable entries ▪ Temperature: −50 to +150 °C (−58 to +302 °F) for rubber seal without cable gland (observe max. permitted temperature of cable gland!) ▪ Material: – Aluminum with polyester powder coating – Stainless steel 316L without coating ▪ Cable entry glands: ½" NPT, M20x1.5 ▪ Color of aluminum head: blue, RAL 5012 ▪ Color of aluminum cap: gray, RAL 7035 ▪ Weight: – Aluminum: approx. 860 g (30.33 oz) – Stainless steel: approx. 2 900 g (102.3 oz)

TA30D	Specification
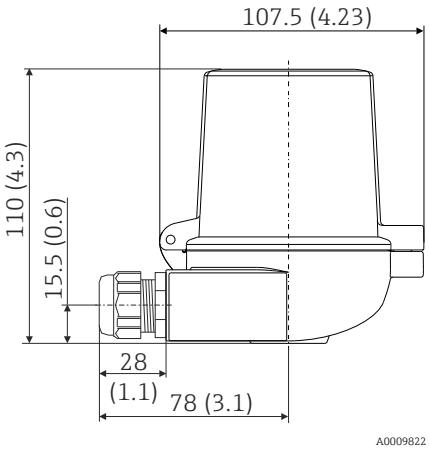	▪ 2 cable entries ▪ Temperature: −50 to +150 °C (−58 to +302 °F) without cable gland ▪ Material: aluminum, polyester powder coated Seals: silicone ▪ Cable entry glands: 1/2" NPT and M20x1.5 ▪ Two head transmitters can be mounted. In the standard configuration one transmitter is mounted in the terminal head cover and an additional terminal block is installed directly on the insert. ▪ Color of head: blue, RAL 5012 ▪ Color of cap: gray, RAL 7035 ▪ Weight: 390 g (13.75 oz)

Weight

- Head transmitter: approx. 40 to 50 g (1.4 to 1.8 oz)
- Field housing: see specifications

Materials

All the materials used are RoHS-compliant.

- Housing: polycarbonate (PC), corresponds to UL94, V-2 UL recognized
- Terminals:
  Screw terminals: nickel-plated brass and gold-plated contacts
- Potting (head transmitter): QSIL 553

Field housing: see specifications

13.7 Certificates and approvals

CE mark

The product meets the requirements of the harmonized European standards. As such, it complies with the legal specifications of the EC directives. The manufacturer confirms successful testing of the product by affixing to it the CE-mark.

EAC mark

The product meets the legal requirements of the EEU guidelines. The manufacturer confirms the successful testing of the product by affixing the EAC mark.

Ex approval

Information about currently available Ex versions (ATEX, FM, CSA, etc.) can be supplied by your E+H Sales Center on request. All explosion protection data are given in separate documentation which is available upon request.

UL approval

UL recognized component (see www.ul.com/database, search for Keyword "E225237")

CSA GP

CAN/CSA-C22.2 No. 61010-1, 2nd Edition

HART® certification

The temperature transmitter is registered by the HART® Communication Foundation. The device meets the requirements of the HART® Communication Protocol Specifications, Revision 7.

Marine approvals

For the type approval certificates (DNVGL, BV etc.) currently available, please contact your Endress+Hauser Sales Center for information. All data relating to shipbuilding can be found in separate type approval certificates which can be requested as needed.

Radio approval

The device has Bluetooth® radio approval in accordance with the Radio Equipment Directive (RED) and the Federal Communications Commission (FCC) 15.247 for the USA.

Europe	
This device meets the requirements of the Radio Equipment Directive RED 2014/53/EU:	▪ EN 300 328 ▪ EN 301 489-1 ▪ EN 301 489-17

Kanada and USA	
English: This device complies with Part 15 of the FCC Rules and with Industry Canada licenceexempt RSS standard(s). Operation is subject to the following two conditions: ▪ This device may not cause harmful interference, and ▪ This device must accept any interference received, including interference that may cause undesired operation. Changes or modifications made to this equipment not expressly approved by Endress+Hauser may void the user's authorization to operate this equipment. This equipment has been tested and found to comply with the limits for a Class B digital device, pursuant to part 15 of the FCC Rules. These limits are designed to provide reasonable protection against harmful interference in a residential installation. This equipment generates, uses and can radiate radio frequency energy and, if not installed and used in accordance with the instructions, may cause harmful interference to radio communications. However, there is no guarantee that interference will not occur in a particular installation. If this equipment does cause harmful interference to radio or television reception, which can be determined by turning the equipment off and on, the user is encouraged to try to correct the interference by one or more of the following measures: ▪ Reorient or relocate the receiving antenna. ▪ Increase the separation between the equipment and receiver. ▪ Connect the equipment into an outlet on a circuit different from that to which the receiver is connected. ▪ Consult the dealer or an experienced radio/TV technician for help. This equipment complies with FCC and IC radiation exposure limits set forth for an uncontrolled environment. This equipment should be installed and operated with minimum distance 20cm between the radiator and your body.	Français: Le présent appareil est conforme aux CNR d'industrie Canada applicables aux appareils radio exempts de licence. L'exploitation est autorisée aux deux conditions suivantes : ▪ L'appareil ne doit pas produire de brouillage, et ▪ L'utilisateur de l'appareil doit accepter tout brouillage radioélectrique subi, même si le brouillage est susceptible d'en compromettre le fonctionnement. Les changements ou modifications apportées à cet appareil non expressément approuvée par Endress+Hauser peut annuler l'autorisation de l'utilisateur d'opérer cet appareil. Déclaration d'exposition aux radiations: Cet équipement est conforme aux limites d'exposition aux rayonnements IC établies pour un environnement non contrôlé. Cet équipement doit être installé et utilisé avec un minimum de 20 cm de distance entre la source de rayonnement et votre corps.

MTTF

- Without Bluetooth® wireless technology: 168 years
- With Bluetooth® wireless technology: 123 years

according to EN ISO 13849-1

Other standards and guidelines	▪ IEC 60529: Degree of protection provided by housing (IP code) ▪ IEC/EN 61010-1: Safety requirements for electrical equipment for measurement, control and laboratory use ▪ IEC/EN 61326-Series: Electromagnetic compatibility (EMC requirements) ▪ This Class B digital apparatus complies with Canadian ICES-003 Cet appareil numérique de la classe B est conforme à la norme NMB-003 du Canada. Compliance Label: CAN ICES-3 (B)/NMB-3(B)

13.8 Supplementary documentation

Supplementary ATEX documentation:
ATEX: II1G Ex ia IIC T6...T4 Ga: XA01736T/09/a3
ATEX II2G Ex d IIC: XA01007T/09/a3 (transmitter in field housing)
ATEX II3G Ex ic IIC: XA01155T/09/a3
ATEX II 3D, II 3G: XA01006T/09/a3

14 Operating menu and parameter description

The following tables list all the parameters in the "Guidance, Diagnostics, Application and System" operating menus. The page number refers to where a description of the parameter can be found.

Depending on the parameter configuration, not all submenus and parameters are available in every device. Information on this can be found in the parameter description under "Prerequisite".

This symbol indicates how to navigate to the parameter using operating tools (e.g. FieldCare).

Guidance →	**Commissioning →**	Commissioning wizard Start	→ 32

Guidance →	Create documentation [1]
	Save / Restore [1]
	Compare [1]

1) These parameters only appear in FDT/DTM-based operating tools, such as Endress+Hauser's FieldCare and DeviceCare

Diagnostics →	**Actual diagnostics →**	Actual diagnostics 1	→ 65
		Operating time	→ 65

Diagnostics →	**Diagnostic list →**	Actual diagnostics 1, 2, 3	→ 65
		Actual diag channel 1, 2, 3	→ 65
		Time stamp 1, 2, 3	→ 66

Diagnostics →	**Event logbook →**	Previous diagnostics n	→ 66
		Previous diag n channel	→ 66
		Time stamp n	→ 67

Diagnostics →	**Simulation →**	Diagnostic event simulation	→ 67
		Current output simulation	→ 67
		Value current output	→ 67
		Sensor simulation	→ 68
		Sensor simulation value	→ 68

Diagnostics →	**Diagnostic settings →**	**Properties →**	Alarm delay	→ 68
			Sensor line resistance	→ 69
			Limit corrosion detection	→ 69
			Thermocouple diagnostic	→ 69
		Diagnostic behavior→ Sensor, electronics, process, configuration		→ 69
		Status signal → Sensor, electronics, process, configuration		→ 70

Diagnostics →	**Min/max values →**	Sensor min value	→ 70
		Sensor max value	→ 70
		Reset sensor min/max values	→ 71
		Device temperature min.	→ 71
		Device temperature max.	→ 71
		Reset device temp. min/max values	→ 71

Application →	**Measured values →**	Sensor value	→ 71
		Sensor raw value	→ 71
		Output current	→ 71
		Percent of range	→ 71
		Device temperature	→ 71
		PV	→ 72
		SV	→ 72
		TV	→ 73
		QV	→ 73

Application →	**Sensor →**	Unit	→ 73
		Sensor type	→ 73
		Connection type	→ 74
		2-wire compensation	→ 74
		Reference junction	→ 74
		RJ preset value	→ 75
		Sensor offset	→ 75

Application →	**Sensor →**	**Linearization →**	Call./v. Dusen coeff. R0, A, B, C	→ 75
			Polynomial coeff. R0, A, B	→ 76
			Sensor lower limit	→ 76
			Sensor upper limit	→ 77

Application →	**Current output →**	4mA value	→ 77
		20mA value	→ 77
		Failure mode	→ 77
		Failure current	→ 78
		Current trimming 4 mA	→ 79
		Current trimming 20 mA	→ 79
		Damping	→ 79

Application →	**HART configuration →**	Assign current output (PV)	→ 80
		Assign SV	→ 80
		Assign TV	→ 80
		Assign QV	→ 80

		HART address	→ 81
		No. of preambles	→ 81

System→	**Device management→**	HART short tag	→ 81
		Device tag	→ 81
		Mains filter	→ 82
		Locking status	→ 82
		Device reset	→ 82
		Configuration counter	→ 83
		Configuration changed	→ 83

System→	**User management →**	**Define password →**	New Password	→ 84
			Confirm new password	→ 84
			Status password entry	→ 85
		Change user role →	Password [1]	→ 85
			Status password entry	→ 85
		Recover password →	Recover password	→ 85
			Status password entry	→ 86
		Change password →	Old password	→ 86
			New Password	→ 86
			Confirm new password	→ 86
			Status password entry	→ 86
		Delete password →	Delete password	→ 87

1) The required user role must first be selected here when operating the device via the SmartBlue app.

System→	**Bluetooth configuration →**	Bluetooth	→ 87
		Change Bluetooth password [1]	→ 87

1) Function is only visible in the SmartBlue app

System →	**Information →**	**Device →**	Squawk	→ 88
			Serial number	→ 88
			Order code	→ 88
			Firmware version	→ 88
			Hardware revision	→ 89
			Extended order code (n) [1]	→ 89
			Device name	→ 89
			Manufacturer	→ 89

1) n = 1, 2, 3

System →	**Information →**	**Device location →**	Latitude	→ 90
			Longitude	→ 90
			Altitude	→ 90

			Location method	→ 📄 90
			Location description	→ 📄 91
			Process unit TAG	→ 📄 91

System →	**Information →**	**HART info →**	Device type	→ 📄 91
			Device revision	→ 📄 92
			HART revision	→ 📄 92
			HART descriptor	→ 📄 92
			HART message	→ 📄 92
			Hardware revision	→ 📄 92
			Software revision	→ 📄 93
			HART date code	→ 📄 93
			Manufacturer ID	→ 📄 93
			Device ID	→ 📄 93

System →	**Display →**	Display interval	→ 📄 94
		Format display	→ 📄 94
		Value 1 display	→ 📄 95
		Decimal places 1	→ 📄 95
		Value 2 display	→ 📄 95
		Decimal places 2	→ 📄 95
		Value 3 display	→ 📄 95
		Decimal places 3	→ 📄 95

14.1 Menu: Diagnostics

14.1.1 Submenu: Actual diagnostics

Actual diagnostics 1

Navigation	Diagnostics → Actual diagnostics → Actual diagnostics 1
Description	Displays the current diagnostic message. If two or more messages occur simultaneously, the message with the highest priority is shown on the display.
Additional information	Example for display format: F041-Sensor interrupted

Operating time

Navigation	Diagnostics → Actual diagnostics → Operating time
Description	Displays the length of time the device has been in operation.
User interface	Hours (h)

14.1.2 "Diagnostic list" submenu

n = Number of diagnostic messages (n = 1 to 3)

Actual diagnostics n

Navigation	Diagnostics → Actual diagnostics → Actual diagnostics n
Description	Displays the current diagnostic message. If two or more messages occur simultaneously, the message with the highest priority is shown on the display.
Additional information	Example for display format: F041-Sensor interrupted

Actual diag channel n

Navigation	Diagnostics → Actual diagnostics → Actual diag channel n
Description	Displays the function module to which the diagnostic message refers.

User interface
- Device
- Sensor
- Device temperature
- Current output
- Sensor RJ

Time stamp n

Navigation Diagnostics → Actual diagnostics → Time stamp n

Description Displays the time stamp of the current diagnostic message in relation to the operating time.

User interface Hours (h)

14.1.3 "Event logbook" submenu

n = Number of diagnostic messages (n = 1 to 10). The last 10 messages are listed in chronological order.

Previous diagnostics n

Navigation Diagnostics → Event logbook → Previous diagnostics n

Description Displays the diagnostic messages that occurred in the past. The last 10 messages are listed in chronological order.

User interface Symbol for event behavior and diagnostic event.

Additional information Example for display format:
F201-Electronics faulty

Previous diag n channel

Navigation Diagnostics → Event logbook → Previous diag n channel

Description Displays the function module to which the diagnostic message refers.

User interface
- Device
- Sensor
- Device temperature
- Current output
- Sensor RJ

Time stamp n

Navigation Diagnostics → Event logbook → Time stamp n

Description Displays the time stamp of the current diagnostic message in relation to the operating time.

User interface Hours (h)

14.1.4 "Simulation" submenu

Diagnostic simulation

Navigation Diagnostics → Simulation → Diagnostic simulation

Description Switches diagnostic simulation on and off.

Selection Enter one of the diagnostic events using the dropdown menu → 39. The assigned status signals and diagnostic behaviors are used in the simulation mode. Select 'Off' to quit the simulation.
Example: x043 Short circuit

Factory setting Off

Current output simulation

Navigation Diagnostics → Simulation → Current output simulation

Description Use this function to switch simulation of the current output on and off. The status signal indicates a category "C" diagnostic message ("function check") while the simulation is running.

Selection
- Off
- On

Factory setting Off

Value current output

Navigation Diagnostics → Simulation → Value current output

Description Use this function to set a current value for the simulation. In this way, users can verify the correct adjustment of the current output and the correct function of downstream switching units.

User entry 3.58 to 23 mA

Factory setting 3.58 mA

Sensor simulation

Navigation Diagnostics → Simulation → Sensor simulation

Description Use this function to enable the simulation of the process variable. The simulation value of the selected process variable is defined in the **Sensor simulation value** parameter.

Selection
- Off
- On

Factory setting Off

Sensor simulation value

Navigation Diagnostics → Simulation → Sensor simulation value

Description Use this function to enter a simulation value for the process variable. Subsequent measured value processing and the signal output use this simulation value. In this way, users can verify whether the measuring device has been configured correctly.

User entry $-1.0 \cdot 10^{20}$ to $+1.0 \cdot 10^{20}$ °C

Factory setting 0.00 °C

14.1.5 "Diagnostic settings" submenu

Submenu: Properties

Alarm delay

Navigation Diagnostics → Diagnostic settings → Properties → Alarm delay

Description Use this function to set the delay time during which a diagnostics signal is suppressed before it is output.

User entry 0 to 5 s

Factory setting 2 s

Sensor line resistance

Navigation Diagnostics → Diagnostic settings → Properties → Sensor line resistance

Prerequisite A 4-wire RTD or TC must be selected as the sensor type or connection type. → 73

Description Displays the highest measured resistance value of a sensor line.

User interface $-1.0 \cdot 10^{20}$ to $+1.0 \cdot 10^{20}$ Ω

Limit corrosion detection

Navigation Diagnostics → Diagnostic settings → Properties → Limit corrosion detection

Prerequisite A 4-wire RTD or TC must be selected as the sensor type or connection type. → 73

Description Use this function to enter the limit value for corrosion detection. If this value is exceeded, the device behaves as defined in the diagnostic settings.

User entry 5 to 10 000 Ω

Factory setting 50.0 Ω for connection type 4-wire RTD
5 000 Ω for connection type TC

Thermocouple diagnostic

Navigation Diagnostics → Diagnostic settings → Properties → Thermocouple diagnostic

Description Use this function to switch off the "Sensor corrosion" and "Sensor break" diagnostic functions during thermocouple measurement.

This may be necessary in order to connect electronic simulators (e.g. calibrators) during a thermocouple measurement. The accuracy of the transmitter is not influenced by either the activation or deactivation of the thermocouple diagnostics function.

Selection
- On
- Off

Diagnostic behavior

Navigation Diagnostics → Diagnostic settings → Diagnostic behavior

Description Each diagnostic event is assigned a certain diagnostic behavior. The user can change this assignment for certain diagnostic events. → 39

Selection
- Alarm
- Warning
- Disabled

Factory setting See the list of diagnostic events → 39

Status signal

Navigation Diagnostics → Diagnostic settings → Status signal

Description Each diagnostic event is assigned a certain status signal at the factory [1]. The user can change this assignment for certain diagnostic events. → 39

1) Digital information available via HART® communication

Selection
- Failure (F)
- Function check (C)
- Out of specification (S)
- Maintenance required (M)
- No effect (N)

Factory setting See the list of diagnostic events → 39

14.1.6 "Min/max values" submenu

Sensor min value

Navigation Diagnostics → Min/max values → Sensor min value

Description Displays the minimum temperature measured in the past at the sensor input (minimum indicator).

Sensor max. value

Navigation Diagnostics → Min/max values → Sensor max value

Description Displays the maximum temperature measured in the past at the sensor input (maximum indicator).

Reset sensor min/max values

Navigation	Diagnostics → Min/max values → Reset sensor min/max values
Description	Resets the min/max values of the sensor to their default values.
User entry	Clicking the **Reset sensor min/max values** activates the reset function. As a result of this action, the min/max values of the sensor only display the reset, temporary values.

Device temperature min.

Navigation	Diagnostics → Min/max values → Device temperature min.
Description	Displays the minimum electronics temperature measured in the past (minimum indicator).

Device temperature max.

Navigation	Diagnostics → Min/max values → Device temperature max.
Description	Displays the maximum electronics temperature measured in the past (maximum indicator).

Reset device temp. min/max values

Navigation	Diagnostics → Min/max values → Reset device temp. min/max values
Description	Resets the peakhold indicators for the minimum and maximum electronic temperatures measured.
User entry	Clicking the **Reset device temperature min/max values** activates the reset function. As a result of this action, the min/max values for the device temperature only display the reset, temporary values.

14.2 Menu: Application

14.2.1 Submenu: Measured values

Sensor value

Navigation Application → Measured values → Sensor value

Description Displays the current measured value at the sensor input.

Sensor raw value

Navigation Application → Measured values → Sensor raw value

Description Displays the non-linearized mV/Ohm value at the specific sensor input.

Output current

Navigation Application → Measured values → Output current

Description Displays the calculated output current in mA.

Percent of range

Navigation Application → Measured values → Percent of range

Description Displays the measured value in percentage of the span

Device temperature

Navigation Application → Measured values → Device temperature

Description Displays the current electronics temperature.

PV

Navigation Application → Measured values → PV

Description Displays the primary device variables.

SV

Navigation Application → Measured values → SV

Description Displays the secondary device variables.

TV

Navigation Application → Measured values → TV

Description Displays the tertiary device variables.

QV

Navigation Application → Measured values → QV

Description Displays the quartenary (fourth) device variables.

14.2.2 Submenu: Sensor

Unit

Navigation Application → Sensor → Unit

Description Use this function to select the engineering unit for all the measured values.

Options
- °C
- °F
- K
- Ω
- mV

Factory setting °C

Additional information Please note: if another unit has been selected instead of the factory setting (°C), all the set temperature values are converted to correspond to the configured temperature unit.
Example: 150 °C is set as the upper range value. Following the selection of °F as the engineering unit, the new (converted) upper range value = 302 °F.

Sensor type

Navigation Application → Sensor → Sensor type

Description Use this function to select the sensor type for the sensor input.

Please observe the terminal assignment when connecting the sensors. → 15

Options A list of all the possible sensor types is provided in the "Technical data" section.→ 45

Factory setting Sensor type 1: Pt100 IEC751

Connection type

Navigation Application → Sensor → Connection type

Prerequisite An RTD sensor must be specified as the sensor type.

Description Use this function to select the connection type for the sensor.

Options 2-wire, 3-wire, 4-wire

Factory setting 4-wire

2-wire compensation

Navigation Application → Sensor → 2-wire compensation

Prerequisite An RTD sensor with a **2-wire** connection type must be specified as the sensor type.

Description Use this function to specify the resistance value for two-wire compensation in RTDs.

User entry 0 to 30 Ω

Factory setting 0 Ω

Reference junction

Navigation Application → Sensor → Reference junction

Prerequisite A thermocouple (TC) sensor must be selected as the sensor type.

Description Use this function to select reference junction measurement for temperature compensation of thermocouples (TC).

If **Preset value** is selected, the compensation value is specified via the **RJ preset value** parameter.

Options
- Internal measurement: the internal reference junction temperature is used.
- Fixed value: a fixed value is used.
- Measured value of the external sensor: the measured value of the connected sensor is used.

Factory setting Internal measurement

RJ preset value

Navigation Application → Sensor → RJ preset value

Prerequisite The **Preset value** parameter must be set if the **Fixed value** option is selected.

Description Use this function to define the fixed preset value for temperature compensation.

User entry −58 to +360

Factory setting 0.00

Sensor offset

Navigation Application → Sensor → Sensor offset

Description Use this function to set the zero point correction (offset) of the sensor measured value. The value indicated is added to the measured value.

User entry −18.0 to +18.0

Factory setting 0.0

14.2.3 Submenu: Linearization

Call./v. Dusen coeff. R0

Navigation Application → Sensor → Linearization → Call./v. Dusen coeff. R0

Prerequisite The RTD platinum (Callendar/Van Dusen) option is enabled in the **Sensor type** parameter.

Description Use this function to set the R0 Value only for linearization with the Callendar/Van Dusen polynomial.

User entry 1 to 2 000

Factory setting 100.000 Ω

Call./v. Dusen coeff. A, B and C

Navigation Application → Sensor → Linearization → Call./v. Dusen coeff. A, B and C

Prerequisite The RTD platinum (Callendar/Van Dusen) option is enabled in the **Sensor type** parameter.

Description Use this function to set the coefficients for sensor linearization based on the Callendar/Van Dusen method.

Factory setting
- A: 3.90830e-003
- B: -5.77500e-007
- C: -4.18300e-012

Polynomial coeff. R0

Navigation Application → Sensor → Linearization → Polynomial coeff. R0

Prerequisite The RTD poly nickel or RTD copper polynomial option is enabled in the **Sensor type** parameter.

Description Use this function to set the R0 Value only for linearization of nickel/copper sensors.

User entry 1 to 20 000 Ω

Factory setting 100.00 Ω

Polynomial coeff. A, B

Navigation Application → Sensor → Linearization → Polynomial coeff. Polynomial coeff. A, B

Prerequisite The RTD poly nickel or RTD copper polynomial option is enabled in the **Sensor type** parameter.

Description Use this function to set the coefficients for sensor linearization of copper/nickel resistance thermometers.

Factory setting Polynomial coeff. A = 5.49630e-003

Polynomial coeff. B = 6.75560e-006

Sensor lower limit

Navigation Application → Sensor → Linearization → Sensor lower limit

Prerequisite The RTD platinum, RTD poly nickel or RTD copper polynomial option is enabled in the **Sensor type** parameter.

Description Use this function to set the lower calculation limit for special sensor linearization.

User entry Depends on the **sensor type** selected.

Factory setting Depends on the **sensor type** selected.

Sensor upper limit

Navigation Application → Sensor → Linearization → Sensor upper limit

Prerequisite The RTD platinum, RTD poly nickel or RTD copper polynomial option is enabled in the **Sensor type** parameter.

Description Use this function to set the upper calculation limit for special sensor linearization.

User entry Depends on the **sensor type** selected.

Factory setting Depends on the **sensor type** selected.

14.2.4 Submenu: Current output

4mA value

Navigation Application → Current output → 4mA value

Description Use this function to assign a measured value to the current value 4 mA.

Factory setting 0 °C

20mA value

Navigation Application → Current output → 20mA value

Description Use this function to assign a measured value to the current value 20 mA.

Factory setting 100 °C

Failure mode

Navigation Application → Current output → Failure mode

Description Use this function to select the signal on alarm level of the current output in the event of an error.

Options
- High alarm
- Low alarm

Factory setting Low alarm

Failure current

Navigation Application → Current output → Failure current

Prerequisite The **High alarm** option is enabled in the "Failure mode" parameter.

Description Use this function to set the value the current output adopts in an alarm condition.

User entry 21.5 to 23 mA

Factory setting 22.5

Adjustment of the analog output (4 and 20 mA current trimming)

Current trimming is used to compensate the analog output (D/A conversion). Here, the output current of the transmitter must be adapted so that it suits the value expected at the higher-level system.

Current trimming does not affect the digital HART® value. This can cause the measured value shown on the locally installed display to differ marginally from the value displayed in the higher-level system.

Procedure

1. Start
⇓
2. Install an accurate ammeter (more accurate than the transmitter) in the current loop.
⇓
3. Switch on current output simulation and set the simulation value to 4 mA.
⇓
4. Measure the loop current with the ammeter and make a note of the value.
⇓
5. Set the simulation value to 20 mA.
⇓
6. Measure the loop current with the ammeter and make a note of the value.
⇓
7. Enter the current values determined as adjustment values in the **Current trimming 4 mA / 20 mA** parameters
⇓
8. End

Current trimming 4 mA

Navigation Application → Current output → Current trimming 4 mA

Description Use this function to set the correction value for the current output at the start of the measuring range at 4 mA.

User entry 3.5 to 4.25 mA

Factory setting 4 mA

Additional information The trimming only affects the current loop values from 3.8 to 20.5 mA. The failure mode with **low alarm** and **high alarm** current values is not subject to trimming.

Current trimming 20 mA

Navigation Application → Current output → Current trimming 20 mA

Description Use this function to set the correction value for the current output at the end of the measuring range at 20 mA.

User entry 19.50 to 20.5 mA

Factory setting 20.000 mA

Additional information The trimming only affects the current loop values from 3.8 to 20.5 mA. The failure mode with **low alarm** and **high alarm** current values is not subject to trimming.

Damping

Navigation Application → Current output → Damping

Description Use this function to set the time constant for current output damping.

User entry 0 to 120 s

Factory setting 0 s

Additional information The current output responds to fluctuations in the measured value with an exponential delay. The time constant of this delay is defined by this parameter. If a low time constant is entered, the current output responds quickly to the measured value. On the other hand, the response of the current output is delayed if a high time constant is entered.

14.2.5 Submenu: HART configuration

Assign current output (PV)

Navigation	Application → HART configuration → Assign current output (PV)
Description	Use this function to assign the measured variables to the primary HART® value (PV).
User interface	Sensor
Factory setting	Sensor (fixed assignment)

Assign SV

Navigation	Application → HART configuration → Assign SV
Description	Use this function to assign the measured variable to the secondary HART value (SV).
User interface	Device temperature (fixed assignment)
Factory setting	Device temperature (fixed assignment)

Assign TV

Navigation	Application → HART configuration → Assign TV
Description	Use this function to assign the measured variable to the tertiary HART value (TV).
User interface	Sensor (fixed assignment)
Factory setting	Sensor (fixed assignment)

Assign QV

Navigation	Application → HART configuration → Assign QV
Description	Use this function to assign the measured variable to the quaternary (fourth) HART value (QV).
User interface	Sensor (fixed assignment)
Factory setting	Sensor (fixed assignment)

HART address

Navigation	Application → HART configuration → HART address
Description	Use this function to define the HART address of the device.
User entry	0 to 63
Factory setting	0
Additional information	The measured value can only be transmitted via the current value if the address is set to "0". The current is fixed to a value of 4.0 mA for all other addresses (Multidrop mode). [1]

1) Can only be configured in FDT/DTM-based operating tools such as, e.g., Endress+Hauser's FieldCare, DeviceCare, not via the SmartBlue app however.

No. of preambles

Navigation	Application → HART configuration → No. of preambles
Description	Use this function to define the number of preambles in the HART telegram.
User entry	5 to 20
Factory setting	5

14.3 Menu: System

14.3.1 Submenu: Device management

HART short tag

Navigation	System → Device management → HART short tag
Description	Use this function to define a short tag for the measuring point.
User entry	Up to 8 alphanumeric characters (letters, numbers and special characters).
Factory setting	8 x '?'

Device tag

Navigation System → Device management → Device tag

Description Use this function to enter a unique name for the measuring point so it can be identified quickly within the plant.

User entry Max. 32 characters, such as letters, numbers or special characters (e.g. @, %, /)

Factory setting Depends on the product root and serial number

Mains filter

Navigation System → Device management → Mains filter

Description Use this function to select the mains filter for A/D conversion.

Options
- 50 Hz
- 60 Hz

Factory setting 50 Hz

Locking status

Navigation System → Device management → Locking status

Description Displays the device locking status. When write protection is activated, write access to the parameters is disabled.

User interface Enabled or disabled check box: **Locked by hardware**

Device reset

Navigation System → Device management → Device reset

Description Use this function to reset the device configuration - either entirely or in part - to a defined state.

Options
- **Not active**
  No action is executed and the user exits the parameter.
- **To factory defaults**
  All the parameters are reset to the factory setting.
- **To delivery settings**
  All parameters are reset to the order configuration. The order configuration can differ from the factory setting if customer-specific parameter values were defined when the device was ordered.
- **Restart device**
  The device is restarted but the device configuration remains unchanged.

Factory setting Not active

Configuration counter

Navigation System → Device management → Configuration counter

Description Displays the counter reading for changes to device parameters.

Static parameters, whose values change during optimization or configuration, cause this parameter to increment by 1. This supports parameter version management. If several parameters change, e.g. as a result of loading parameters from FieldCare etc. to the device, the counter can show a higher value. The counter cannot be reset and is also not reset to the default value when the device is reset. If the counter overflows, (16 bit), it starts again at 1.

Configuration changed

Navigation System → Device management → Configuration changed

Description Displays whether the configuration of the device has been changed by a master (primary or secondary).

14.3.2 User management submenu

Define password → Maintenance	New Password
	Confirm new password
	Status password entry
Change user role → Operator	Password [1]
	Status password entry
Recover password → Operator	Recover password
	Status password entry
Change password → Maintenance	Old password
	New Password
	Confirm new password
	Status password entry
Delete password → Maintenance	Delete password

1) The required user role must first be selected here when operating the device via the SmartBlue app.

Navigation in the submenu is supported by the following operating elements:
- **Back**
  Return to the previous page
- **Cancel**
  If Cancel is selected, the status before the submenu was started is restored

Define password

Navigation System → User management → Define password

Description Use this function to start password definition

User entry Activate the button

New password

Navigation System → User management → Define password → New password

Description Use this function to enter a password for the **Maintenance** user role to gain access to the relevant functions.

Additional information If the factory setting is not changed, the device is set to the **Maintenance** user role. This means that the device's configuration data are not write-protected and can be edited at all times.
Once a password has been defined, devices can be switched to the **Maintenance** user role if the correct password is entered in the **Password** parameter. A new password becomes valid once it has been verified after being entered in the **Confirm new password** parameter.
The password must contain a minimum of 4 and a maximum of 16 characters and can consist of both letters and numbers. If you lose your password, please contact your Endress +Hauser Sales Center.

User entry **. . . . . .** (enter the password)

Confirm new password

Navigation System → User management → Define password → Confirm new password

Description Use this function to confirm the new password that has been defined.

Additional information A new password becomes valid once it has been verified after being entered in the **Confirm new password** parameter.
The password must contain a minimum of 4 and a maximum of 16 characters and can consist of both letters and numbers. If you lose your password, please contact your Endress +Hauser Sales Center.

User entry **. . . . . .** (enter the password)

Status password entry

Navigation System → User management → Define password → Status password entry

Description Displays the status of the password verification.
- Password accepted
- Wrong password
- Password rules violated
- Permission denied
- Incorrect input sequence
- Invalid user role
- Confirm PW mismatch
- Reset password accepted

Enter password

Navigation System → User management → Enter password

Prerequisite The **Operator** user role is active and a password has been defined.

Description Use this function to enter a password for the selected user role to gain access to the functions of this role.

User entry Enter the defined password.

Status password entry

Navigation System → User management → Enter password → Status password entry

Description → 85

Recover password

Navigation System → User management → Recover password

Prerequisite The **Operator** user role is active and a password has already been defined.

Description Use this function to enter the reset code to reset the current password.

CAUTION

Current password is lost.
- Only use the reset code if you have lost the current password. Contact the Endress +Hauser Sales Center.

User entry Activate the text box and enter the reset code.

Status password entry

Navigation System → User management → Recover password → Status password entry

Description → 85

Logout

Navigation System → User management → Logout

Prerequisite The **Maintenance** user role must be active.

Description The **Maintenance** user role is exited and the system switches to the **Operator** user role.

User entry Activate the button.

Change password

Navigation System → User management → Change password

Prerequisite The **Maintenance** user role must be active.

Description
- Old password:
  Use this function to enter the current password to then be able to make changes to the existing password.
- New password: → 83
- Confirm new password: → 83

User entry
- . . . . . (enter the old password)
- . . . . . (enter the new password)
- . . . . . (confirm the new password)

Status password entry

Navigation System → User management → Change password → Status password entry

Description → 85

Delete password

Navigation System → User management → Delete password

Prerequisite The **Maintenance** user role must be active.

Description The password currently valid is deleted.
The **Define password** button appears.

User entry Activate the **Delete password** button.

14.3.3 Bluetooth configuration submenu

Bluetooth

Navigation System → Bluetooth configuration → Bluetooth

Description Use this function to enable or disable the Bluetooth function.

- Off: The Bluetooth interface is disabled immediately.
- On: The Bluetooth interface is enabled and a connection to the device can be established.

Bluetooth communication is only possible if the CDI and display interface is not used.

Options
- Off
- On

Factory setting On

Change Bluetooth password [1)]

1) Function is only visible in the SmartBlue app

Navigation System → Bluetooth configuration → Change Bluetooth password

Description Use this function to change the Bluetooth password. This function is visible in the SmartBlue app only.

Prerequisite The Bluetooth interface is enabled (ON) and a connection to the device is established.

User entry Enter:
- User name
- Current password
- New Password
- Confirm new password

Press OK to confirm your entries.

14.3.4 Information submenu

Device submenu

Squawk

Navigation System → Information → Device → Squawk

Description This function can be used locally to facilitate the identification of the device in the field. Once the Squawk function has been activated, all the segments flash on the display.

Options
- **Squawk once**: Display of device flashes for 60 seconds and then returns to normal operation.
- **Squawk on**: Display of device flashes continuously.
- **Squawk off**: Squawk is switched off and the display returns to normal operation.

User entry Activate the relevant button

Serial number

Navigation System → Information → Device → Serial number

Description Displays the serial number of the device. It can also be found on the nameplate.

Uses of the serial number
- To identify the measuring device quickly, e.g. when contacting Endress+Hauser.
- To obtain specific information on the measuring device using the Device Viewer: www.endress.com/deviceviewer

User interface Max. 11-digit character string comprising letters and numbers.

Order code

Navigation System → Information → Device → Order code

Description Displays the order code of the device. It can also be found on the nameplate. The order code is generated from the extended order code, which defines all the device features of the product structure. In contrast, the device features cannot be read directly from the order code.

Uses of the order code
- To order an identical spare device.
- To identify the device quickly and easily, e.g. when contacting Endress+Hauser.

Firmware version

Navigation System → Information → Device → Firmware version

Description Displays the device firmware version installed.

User interface Max. 6-digit character string in the format xx.yy.zz

Hardware revision

Navigation System → Information → Device → Hardware revision

Description Displays the hardware revision of the device.

Extended order code (n)

n = Number of parts of the extended order code (n = 1 to 3)

Navigation System → Information → Device → Extended order code n

Description Displays the first, second and/or third part of the extended order code. On account of length restrictions, the extended order code is split into a maximum of 3 parameters. The extended order code indicates the version of all the features of the product structure for the device and thus uniquely identifies the device. It can also be found on the nameplate.

- Uses of the extended order code
- To order an identical spare device.
- To check the ordered device features using the delivery note.

Device name

Navigation System → Information → Device → Device name

Description Displays the device name. It can also be found on the nameplate.

Manufacturer

Navigation System → Information → Device → Manufacturer

Description Displays the name of the manufacturer.

Device location submenu

Latitude

Navigation	System → Information → Device location → Latitude
Description	Use this function to enter the latitude coordinates that describe the device location.
User entry	−90.000 to +90.000 °
Factory setting	0

Longitude

Navigation	System → Information → Device location → Longitude
Description	Use this function to enter the longitude coordinates that describe the device location.
User entry	−180.000 to +180.000 °
Factory setting	0

Altitude

Navigation	System → Information → Device location → Altitude
Description	Use this function to enter the altitude data that describe the device location.
User entry	$-1.0 \cdot 10^{+20}$ to $+1.0 \cdot 10^{+20}$ m
Factory setting	0 m

Location method

Navigation	System → Information → Device location → Location method
Description	Use this function to select the data format for specifying the geographic location. The codes for specifying the location are based on the US National Marine Electronics Association (NMEA) Standard NMEA 0183.

Options
- No fix
- GPS or Standard Positioning Service (SPS) fix
- Differential PGS fix
- Precise positioning service (PPS)
- Real Time Kinetic (RTK) fixed solution
- Real Time Kinetic (RTK) float solution
- Estimated dead reckoning
- Manual input mode
- Simulation mode

Factory setting Manual input mode

Location description

Navigation System → Information → Device location → Location description

Description Use this function to enter a description of the location so that the device can be located in the plant.

User entry Up to 32 alphanumeric characters (letters, numbers and special characters)

Factory setting 32 x '?'

Process unit tag

Navigation System → Information → Device location → Process unit tag

Description Use this function to enter the process unit in which the device is installed.

User entry Up to 32 alphanumeric characters (letters, numbers and special characters)

Factory setting 32 x '?'

HART info submenu

Device type

Navigation System → Information → HART info → Device type

Description Displays the device type with which the device is registered with the HART FieldComm Group. The device type is specified by the manufacturer. It is needed to assign the appropriate device description file (DD) to the device.

User interface 4-digit hexadecimal number

Factory setting 0x11D0

Device revision

Navigation System → Information → HART info → Device revision

Description Displays the device revision with which the device is registered with the HART® FieldComm Group. It is needed to assign the appropriate device description file (DD) to the device.

User interface Revision in hexadecimal format

Factory setting 0x01

HART revision

Navigation System → Information → HART info → HART revision

Description Displays the HART revision of the device.

HART descriptor

Navigation System → Information → HART info → HART descriptor

Description Use this function to define a description for the measuring point.

User entry Up to 16 alphanumeric characters (uppercase letters, numbers and special characters)

Factory setting 16 x '?'

HART message

Navigation System → Information → HART info → HART message

Description Use this function to define a HART message which is sent via the HART protocol when requested by the master.

User entry Up to 32 alphanumeric characters (uppercase letters, numbers and special characters)

Factory setting 32 x '?'

Hardware revision → 89

Navigation System → Information → HART info → Hardware revision

Software revision

Navigation System → Information → HART info → Software revision

Description Displays the software revision of the device.

HART date code

Navigation System → Information → HART info → HART date code

Description Use this function to define date information for individual use.

User entry Date in the format year-month-day (YYYY-MM-DD)

Factory setting 2010-01-01 [1)]

1) Also 01.01.2010 depending on the operating tool

Manufacturer ID

Navigation System → Information → HART info → Manufacturer ID

Description Displays the manufacturer ID under which the device is registered with the HART FieldComm Group.

User interface 4-digit hexadecimal number

Factory setting 0x0011

Device ID

Navigation System → Information → HART info → Device ID

Description A unique HART identifier is saved in the device ID and used by the control systems to identify the device. The device ID is also transmitted in command 0. The device ID is determined unambiguously from the serial number of the device.

User interface ID generated for specific serial number

14.3.5 Submenu: Display

Display interval

Navigation System → Display → Display interval

Description Use this function to set the length of time the measured values are displayed if the values alternate on the local display. This type of change is only generated automatically if several measured values are specified.

- The **Value 1 display - Value 3 display** parameters are used to specify which measured values are shown on the local display.
- The display format of the displayed measured values is specified using the **Format display** parameter.

User entry 4 to 20 s

Factory setting 4 s

Format display

Navigation System → Display → Format display

Description Use this function to select how the measured value is shown on the local display. The display format **Measured value** or **Measured value with bar graph** can be configured.

Options
- Value
- Value + bar graph

Factory setting Value

Additional information

Value

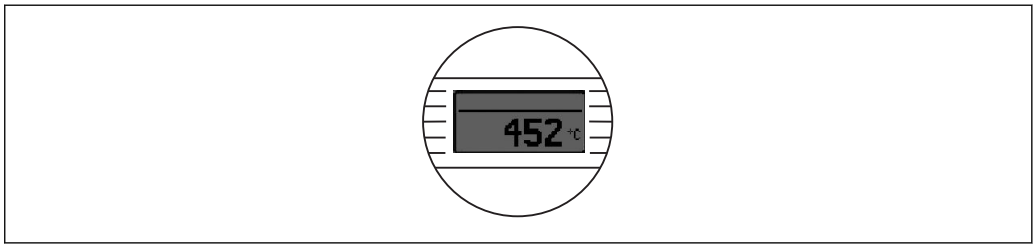

A0014564

Value + bar graph

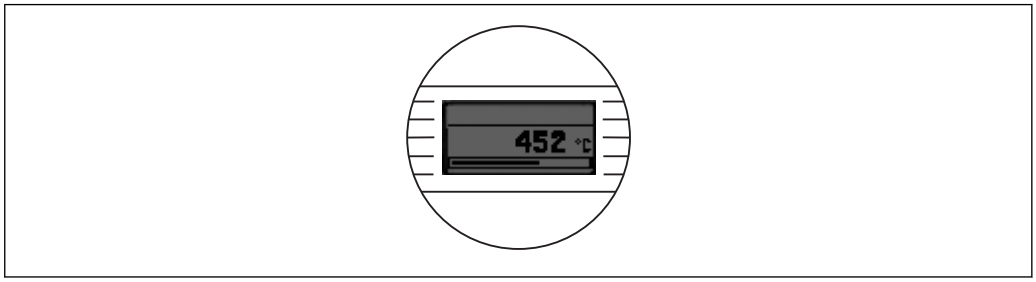

A0014563

Value 1 display (Value 2 or 3 display)

Navigation

System → Display → Format display → Value 1 display (Value 2 or 3 display)

Description

Use this function to select one of the measured values shown on the local display.

The **Format display** parameter is used to specify how the measured values are displayed.

Options

- Process value
- Device temperature
- Output current
- Percent of range
- Off

Factory setting

Process value

Decimal places 1 (decimal places 2 or 3)

Navigation

System → Display → Format display → Decimal places 1 (Decimal places 2 or 3)

Prerequisite

A measured value is defined in the parameter **Value 1 display** (Value 2 or 3 display).

Description

Use this function to select the number of decimal places for the display value. This setting does not affect the accuracy of the device for measuring or calculating the value.

If **Automatic** is selected, the maximum possible number of decimal places is always shown on the display.

Options

- x
- x.x
- x.xx
- x.xxx
- x.xxxx
- Automatic

Factory setting

Automatic

www.addresses.endress.com

Endress+Hauser

People for Process Automation