Test model： BN-702

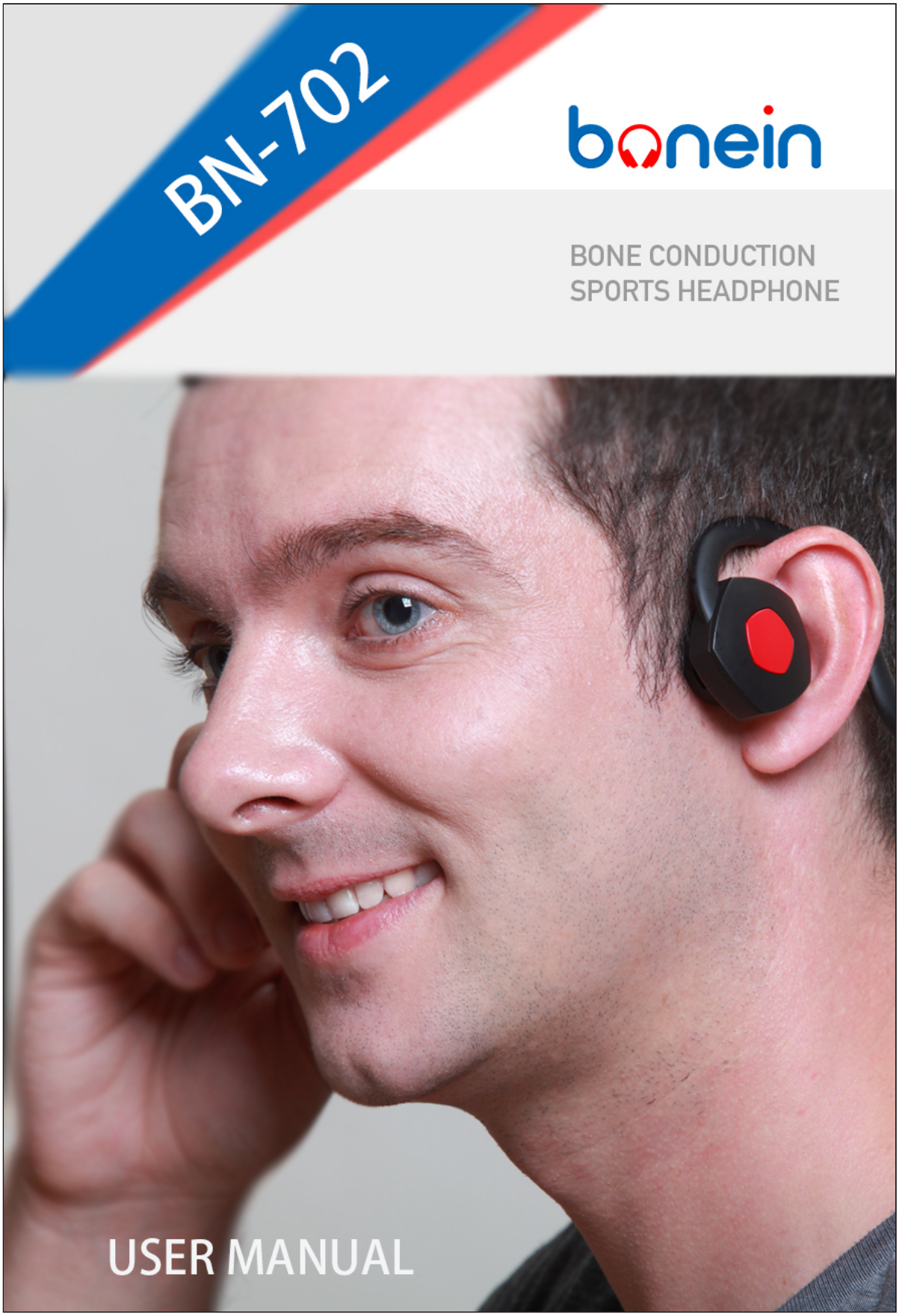

Bone conduction wireless headphone

EN

BN-702 USER MANUAL

~ Add a little magic to your life ~

~ A safer way to hear sound ~

1. Parts description

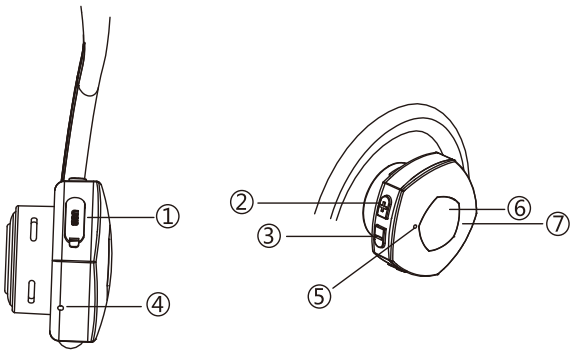

① USB Port

② "+" Vol/Next song

③ "-" Vol/Last song

④ Microphone

⑤ Mic(noise cancellation)

⑥ Multi-Function Button

⑦ LED Indicator

2. Accessories

Item	Details
Headphone	1 set
Micro-USB cable	1 pcs
Mute earplug	1 pair
User manual	1 pcs

3. How to charge

- Connect the headphone to a standard USB port or a wall charger via the USB charging cable.
- The headphone will be fully charged around 3 hours.
- The status LED turns red during charging.
- It will turn blue after fully charged.

Note:

- It's strongly recommended to fully charge the headphone before first use.
- During charging, the headphone does not work.
- To extend battery life, it's recommended to charge headphone at least once a month.

4. Bluetooth pairing

- If pairing occurs with an unintended device, press and hold the Multi-function button (for 3 seconds) until the LED flashing blue and red, which makes the headphone enter into manually pairing mode.
- Enable Bluetooth function of mobile phone or other Bluetooth device and search devices in Bluetooth setting. After searched, select "BN-702" in device list.
- The headphone will automatically connect to the last connected device for approximately 10 seconds.
- After successfully paired, the status LED will flash blue.

Attention:

- If connected device is out of range (33 feet/10 meters), the headphone will be disconnected. In 10 minutes, if the previous connected device is within range, the headphone will automatically reconnect. Longer than 10 minutes and the re-connection is lost, press Multi-function button to reconnect.
- If connected device is turned off, the headphone will be disconnected. To reconnect it (when device is on), press any button on the headphone.

5. Status LED

Color	Status
Red (flash)	Low power
Red (solid)	Charging
Blue (solid)	Charging complete
Blue and Red (flash)	Pairing
Blue (double quick flash once every 2 seconds)	Headphone and the connected device are disconnected. The device might be turned off or out of range (33 feet/10 meters).
Blue (one quick flash once every 5 seconds)	Connected, making a call or playing audio

EN

6. How to wear

Put neckband behind neck and transducers in front of ear, sitting over the cheekbones.

7. Specifications

Playback time:	Around 6 hours
Charging time	Around 3 hours
Stand-by time	Over 1000 hours
Bluetooth version	V4.0
Frequency range	100Hz-18KHz
Wireless range	10 meters (or 33 feet)
Bluetooth connection	A2DP, AVRCP, HSP, HFP
Speaker type	Bone conduction Bluetooth headphone
Waterproofing	IP55
size	13*6cm(folded)
weight	45g

8. Basic operation

Operation	Earphone control	Tone
Pick up calls	Click Multi-function button	Buzz
End calls	Click Multi-function button	Buzz
Refuse calls	Press and hold Multi-function button for 1~2 seconds	Buzz
Redial last call	Double click Multi-function button	Buzz
Volume control	Click volume button “+”/ “-”	
Play/pause music on mobile phone	Press Multi-function button once	Buzz
Previous/Next song	Press and hold “-”/ “+” for 2 seconds	Buzz
Power on	Press and hold Multi-function button for 3 seconds	Buzz
Power off	Press and hold Multi-function button for 5 seconds	Buzz
Bluetooth disconnected		Buzz
Bluetooth connected		Buzz
Low power		Buzz

9. Storage and maintenance

- Store the headphone in cool and dry place, away from direct sunlight. The working temperature is 0~45℃ (32~113℉). Working in cold/hot/moist environment may reduce the life of battery.
- The headphone must be charged before use, if it hasn’t been used for long time.
- Do not leave the headphone in extremely high/low temperature.
- Do not charge the headphone in the moist environment.
- Clean the headphone with a soft dry cloth.

10. Trouble shooting

Issue	Possible problem	Resolution
Does not turn on	The battery is too low	Charge the battery
Does not automatically connect	Bluetooth in standby mode	Double press Multi-function button
Unable to pair	Not in pairing mode	Press and hold Multi-function button for 3 seconds
Cannot be heard on the other end of the phone	Microphone is not activated	Press and hold Multi-function button for calling

11. Limited warranty

All products are covered by one-year limited warranty. Within one-year from the purchase date, the product with manufacturing defect will be replaced for free. Out of one-year from the purchase date, the product with manufacturing defect will be repaired with the charge of parts' cost or, if it is necessary, replaced.

Important

This limited warranty DOES NOT COVER normal wear or damage resulting from any of the following: misuse or negligent use; use contrary to the instruction; deviation from instructions regarding storage and transportation; repair or alteration by anyone other than authorized service center. The warranty will be void if the unit is disassembled.

FCC Warning Statement

Changes or modifications not expressly approved by the party responsible for compliance could void the user's authority to operate the equipment. This equipment has been tested and found to comply with the limits for a Class B digital device, pursuant to Part 15 of the FCC Rules. These limits are designed to provide reasonable protection against harmful interference in a residential installation. This equipment generates uses and can radiate radio frequency energy and, if not installed and used in accordance with the instructions, may cause harmful interference to radio communications. However, there is no guarantee that interference will not occur in a particular installation. If this equipment does cause harmful interference to radio or television reception, which can be determined by turning the equipment off and on, the user is encouraged to try to correct the interference by one or more of the following measures:

- Reorient or relocate the receiving antenna.
- Increase the separation between the equipment and receiver.
- Connect the equipment into an outlet on a circuit different from that to which the receiver is connected.
- Consult the dealer or an experienced radio/TV technician for help.

This device complies with part 15 of the FCC Rules. Operation is subject to the following two conditions: (1) This device may not cause harmful interference, and (2) this device must accept any interference received, including interference that may cause undesired operation.