Est. USA 1981

www.AKCP.com

AKCP LORA_RADIO_MODULE Manual

LORA RF Transceiver Module

Copyright © 2020, AKCP

Table of Contents

1. Introduction 3
2. Features 3
3. Applications 3
4. Electrical Characteristics 4
5. Peripheral Schematics 5
6. Pin definition 5
7. Communications – Interface 6
8. Package information 6
   a. Mechanical dimensions (Unit:mm) 6
   b. Recommended PCB Land Pattern (Unit:mm) 7
9. Antenna and Signal 8
   a. U.FL antenna 8
   b. External PCB trace to Connector guidelines 8
   c. Signal performances 9

Appendix 1: SMD Reflow Chart 11

Revision history 12

Regulation information 13

CONFIDENTIAL

1. Introduction

AKCP_LORA_RADIO_MODULE integrates Semtech RF transceiver chip SX1276, which adopts LoRa® Spread Spectrum modulation frequency hopping technique. The features of long distance and high sensitivity (-139 dBm) make this module perform better than FSK and GFSK module. Multi-signal won't affect each other even in crowded frequency environment; it comes with strong anti-interference performance.

This module is 50mW and ultra-small size, can be widely used in a variety of networking occasions, for automatic meter reading, home building automation, security systems, and remote irrigation systems, is the ideal solution for Internet of Things networking applications.

2. Features

- Frequency Range:
  - 902-928MHz,
  - 863-870Mhz
    (Customizable: 862~1020MHz)
- Sensitivity up to -139dBm @LoRa®
- Maximum output power:
  - +18 dBm in 902-928MHz (LRM9B model)
  - +14 dBm in 863-870MHz (LRM8 model)
- 13mA@receiver mode
- Sleep current <200 nA
- Data transfer rate:
  - @FSK : 1.2-300 Kbps
  - @LoRa®: 0.018-37.5 Kbps
- LoRa®, FSK, GFSK & OOK Modulation mode
- Built-in ESD Protection
- 127 dB Dynamic Range RSSI
- Packet engine up to 256 bytes with FIFO and CRC
- Hopping frequency
- Built-in temperature sensor and low battery indicator
- Supports half-duplex SPI communications
- Excellent blocking immunity
- Operating Temperature Range：
  -40 ~ +85°C
- On-board U.Fl antenna connector
- Optional external antenna pin

3. Applications

- Remote meter reading
- Industrial control
- Home automation remote sensing
- Sensor network
- Health monitoring
- Generator monitoring
- Agricultural monitoring
- Security monitoring
- Power metering

CONFIDENTIAL

4. Electrical Characteristics

Parameter	Min.	Typ.	Max.	Unit	Condition
Operation condition					
Working voltage	1.8	3.3	3.7	V	
Temperature range	-40		+85	℃	
Current consumption					
RX current		10.8		mA	
TX current		120		mA	@20dBm
Sleep current		<0.2		uA	
RF parameter					
Frequency range	863	868	870	MHz	@868MHz
	902	915	928	MHz	@915Mhz
Modulation rate	1.2		300	Kbps	FSK
	0.018		37.5	Kbps	LoRa®
Output power range	-1		18	dBm	
Receiving sensitivity		-123		dBm	@FSK data=1.2kbps, Fdev=5kHZ
		-136		dBm	@Lora BW=125KHz SF=12 CR=4/5

Note: According to the design of the module, when transmitting in the 915MHz band, the maximum bit of register 0x09 (RegPaConfig) must be set as 1. PaSelect must be set 1; or set to 0 otherwise.

Registers for the Transmitter					
RegPaConfig (0x09)	7	PaSelect	rw	0x00	Selects PA output pin 0 → RFO pin. Maximum power of +14 dBm 1 → PA_BOOST pin. Maximum power of +20 dBm
	6-4	MaxPower	rw	0x04	Select max output power: Pmax=10.8+0.6*MaxPower [dBm]
	3-0	OutputPower	rw	0x0f	Pout=Pmax-(15-OutputPower) if PaSelect = 0 (RFO pins) Pout=17-(15-OutputPower) if PaSelect = 1 (PA_BOOST pin)

SX1276 RegPaConfig register

CONFIDENTIAL

5. Peripheral Schematics

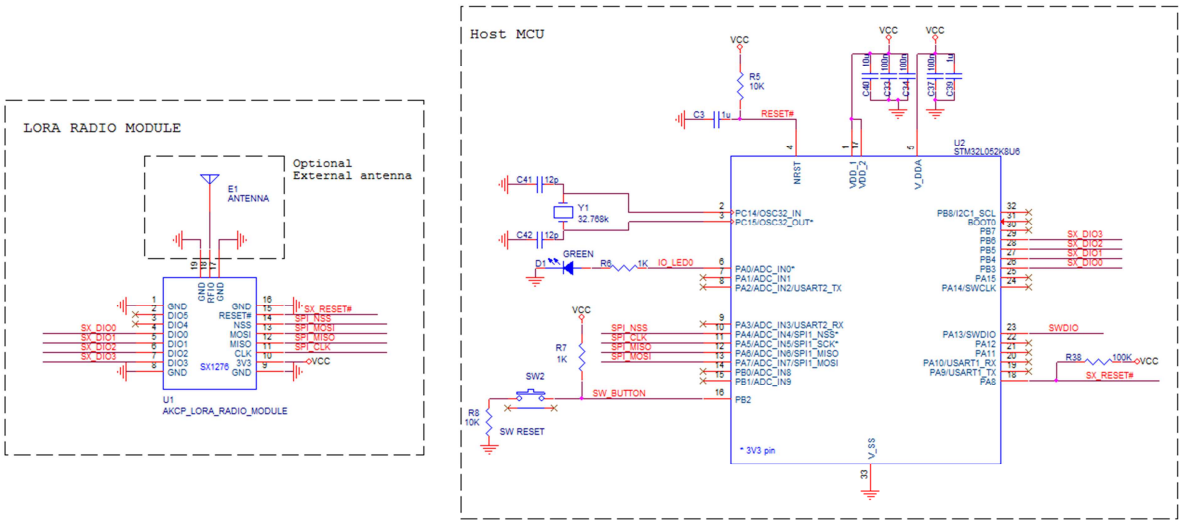

Peripheral Schematic

6. Pin definition

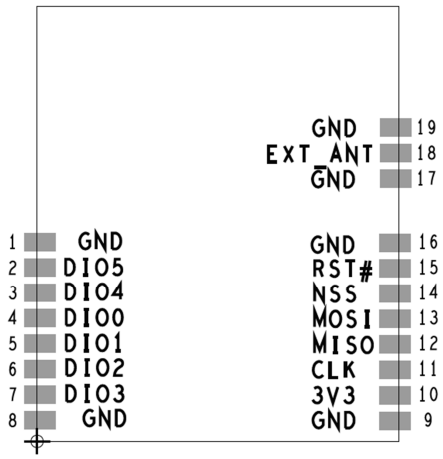

Top View

Pin NO.	Pin Name	Type	Description
1	GND	PWR	Power Ground
2	DIO5	I/O	Digital I/O
3	DIO4	I/O	Digital I/O
4	DIO0	I/O	Digital I/O
5	DIO1	I/O	Digital I/O
6	DIO2	I/O	Digital I/O
7	DIO3	I/O	Digital I/O
8	GND	PWR	Power Ground
9	GND	PWR	Power Ground
10	3V3	PWR	Power Supply (Typical 3.3V)
11	CLK	I	SPI Clock
12	MISO	O	SPI MISO (SPI Output data)
13	MOSI	I	SPI MOSI (SPI input data)
14	NSS	I	SPI enable
15	RESET#	I	Reset Input (active Low)
16	GND	PWR	Power Ground
17	GND	PWR	Power Ground
18	EXT_ANT	RF	External Antenna, 50Ohm impedance
19	GND	PWR	Power Ground

7. Communications – Interface

The AKCP_LORA_RADIO_MODULE embed the Semtech's SX1276 LoRa® transceiver IC, please refer to the SX1276 datasheet for further information regarding the communication and its configurations.

8. Package information

a. Mechanical dimensions (Unit:mm)

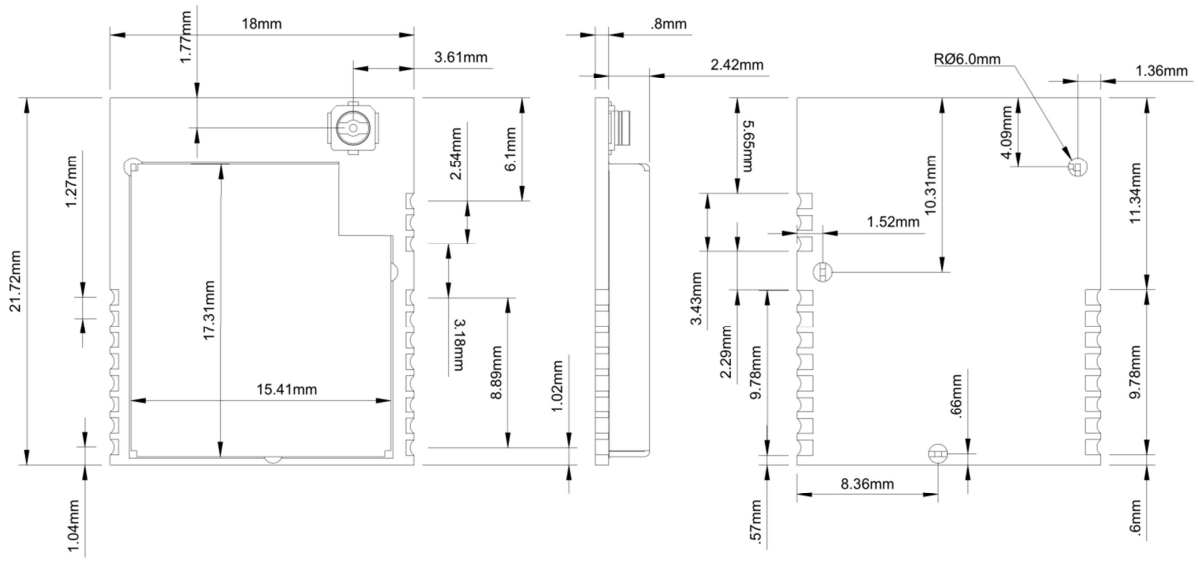

Top View Side View Bottom view

Mechanical dimensions

b. Recommended PCB Land Pattern (Unit:mm)

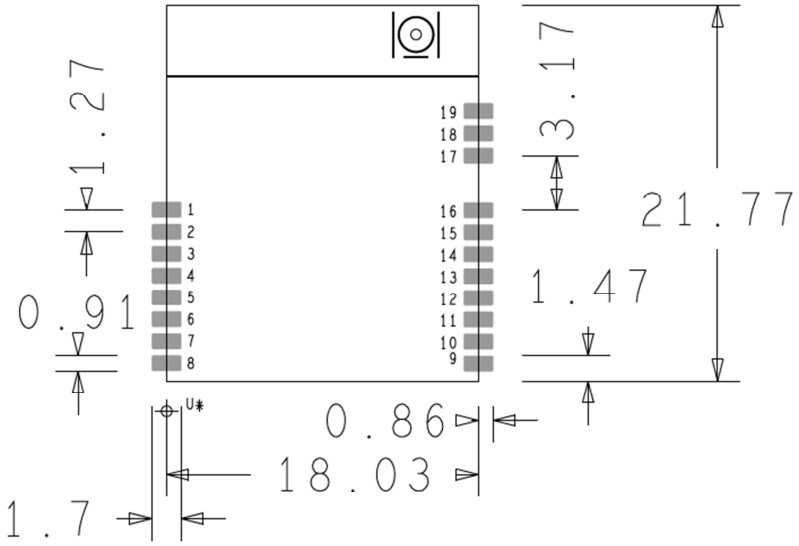

PCB land pattern

CONFID

9. Antenna and Signal

The module is by standard assembled with an on-board U.FL antenna connector.

a. U.FL antenna connector

The AKCP_LORA_RADIO_MODULE provides a male U.FL antenna connector as standard. The connector is specified for 50Ohms impedance signals.
Connector specifications: Hirose, part number UFL-R-SMT10
(https://www.hirose.com/product/en/products/U.FL/U.FL-R-SMT-1%2810%29/)

b. External PCB trace to Connector guidelines

The AKCP_LORA_RADIO_MODULE provides a RFIO pin for connecting an external PCB antenna when the on-board U.Fl antenna connector is not suitable. In this case, R25 (0 Ohm) resistor should be mounted and L8 should be removed.

An antenna is very important for RF communication; its performance will affect the communication directly. The module needs an antenna in 50Ohm impedance. A common antenna as rubber straight/ elbow/ swivel antenna, etc… could be used. To ensure that the module will work with the best possible performance, we suggest using our qualified antennas.

When an external antenna is required, it is required to follow the layout requirements below for the host PCB board.

- Signal trace :
  - it should be implemented with a controlled single trace impedance of 50Ohms (refer to your PCB maker supplier for more information),
  - it should be implemented above a ground plane,
  - it is recommended to use a Coplanar Waveguide (Grounded) with via fences on both sides of the coplanar waveguide.

- Antenna connectors:
  - Antenna connectors should have an impedance of 50Ohms :
    - AMTEK part# SMA009,
    - TEKFUN part# SMA-04
  - A PI matching network should be implemented near the antenna connector.

Layout specifications for a 50 Ohms trace impedance on host PCB with RP-SMA through-hole connector:

- Trace width : 6.5 mils
- Trace spacing with ground shape : 5 mils
- Top layer copper thickness : 0.7 mils (0.5Oz)
- FR-4 Dielectric thickness : 4 mils

CONFIDENTIAL

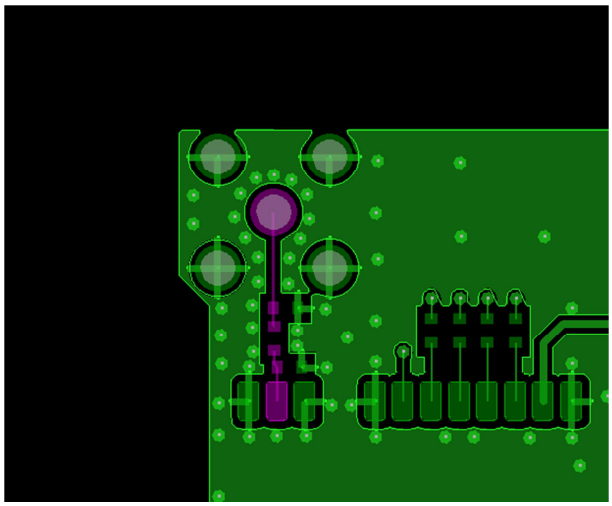

Reference Gerber

c. Antenna

To ensure that the module follow RF regulations, the user must use the antenna specified for the module : Tekfun part# I50-S.

868/915MHz Rubber Dipole antenna (Swivel RP-SMA Male for LRM9B) characteristics:

- Frequency Range: 862~870/902~928MHz
- V.S.W.R: < 2
- Impedance: 50 OHM
- Type of Radiation: Omni-directional
- Polarization: Vertical
- Gain: 2-3dBi
- Electrical Wave: 1/2 wave
- Connector: RP-SMA Male (Swivel) Brass
    - Whip Material: ABS
- Size: 135.6x20.1mm

Important:

For OEM installations, with the LRM9B model, the Modular Certification is only applicable to the antenna Tekfun part# I50-S (with reverse SMA), connected through the UFL connector.

d. Signal performances

To ensure that the module gets the best performance, the user must obey the following principles when using the module :

- Put the module away from the ground and obstacles as far away possible as you could;
- The antenna has the best performance when mounted vertically

CONFIDENTIAL

e. LRM9B Transmission modes

The module is meant for the USA, Canada and all other countries adopting the entire FCC-Part15 regulations in 902-928 ISM band. The module is supporting both Frequency-Hopping, Spread-Spectrum (FHSS) mode and Digital Transmission System (DTS) mode.

The FHSS mode requires that the device transmit at a measured conducted power level no greater than +30 dBm, for a period of no more than 400 msec and over at least 50 channels, each of which occupy no greater than 250 kHz of bandwidth.

Digital Transmission System (DTS) mode, which requires that the device use channels greater than or equal to 500 kHz and comply to a conducted Power Spectral Density measurement of no more than +8 dBm per 3kHz of spectrum.

Hybrid mode, which requires that the device transmit over multiple channels (this may be less than the 50 channels required for FHSS mode, but is recommended to be at least 4) while complying with the Power Spectral Density requirements of DTS mode and the 400 msec dwell time of FHSS mode.

CONFIDENTIAL

Appendix 1: SMD Reflow Chart

We recommend you to follow the IPC related standards in setting the reflow profile:

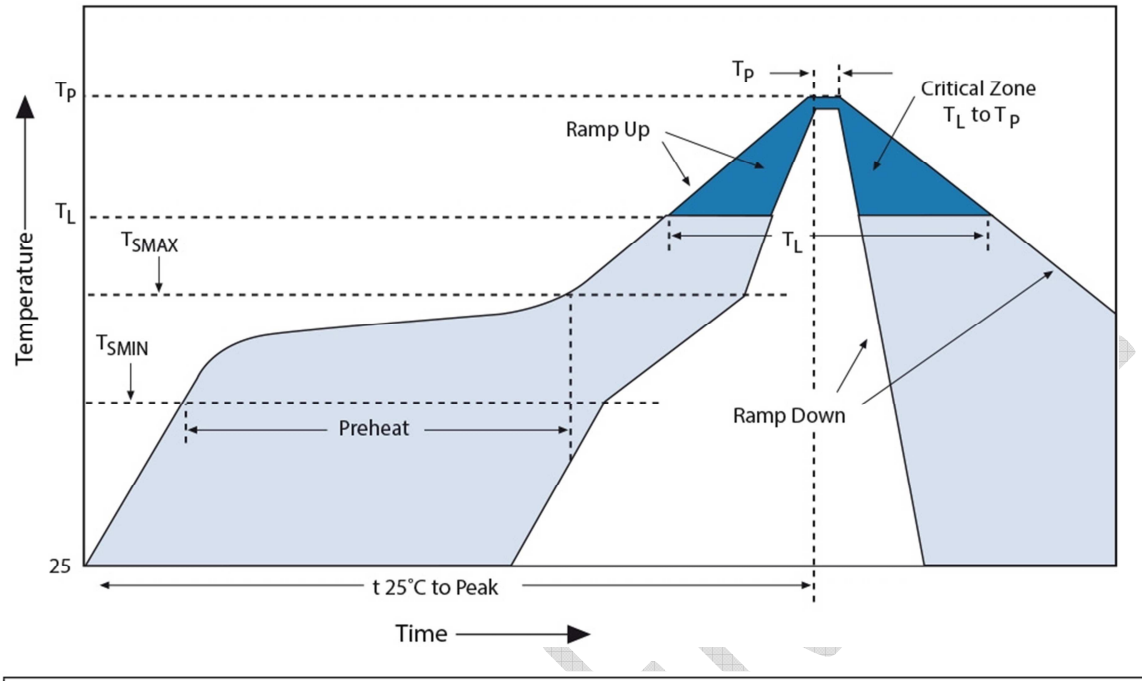

Lead-Free Reflow Profile Re commendation (IPC/JEDEC J-STD-020C)	
Reflow Parameter	Lead-Free Assembly
Minimum preheat temperature (Ts_{MIN})	150°C
Maximum preheat temperature (Ts_{MAX})	200°C
Preheat Time	60-180 seconds
Ts_{MAX} to T_L ramp-up rate	3°C/second maximum
Time above temperature T_L (t_L)	217°C 60-150 seconds
Peak Temperature (T_P)	See Table
Time 25°C to T_P	8 minutes maximum
Time within 5° of Peak T_P	20/40 seconds
Ramp-down rate	6°C/second maximum

Revision history

Revision	Date	Comment
V1.0	2018-09	Initial Release
V1.1	2018-11	Update on-board design change
V1.2	2019-02	Add Gerber/Layout requirement for external PCB trace on host PCB
V1.3	2019-08	Add OEM Manual Statements for limited module
V1.4	2019-09	Update maximum output power for LRM9B model
V1.5	2020-01	Add 9.e LRM9B transmission modes Add note for LRM9B antenna Update FCC regulation text

CONFIDENTIAL

Regulation information

Compliance Statement (Part 15.19)

This device complies with Part 15 of the FCC Rules. Operation is subject to the following two conditions:

1. *This device may not cause harmful interference, and*
2. *This device must accept any interference received, including interference that may cause undesired operation.*

Warning (Part 15.21)

Changes or modifications not expressly approved by the party responsible for compliance could void the user's authority to operate the equipment.

To comply with FCC/IC RF exposure limits for general population / uncontrolled exposure, the antenna(s) used for this transmitter must be installed to provide a separation distance of at least 20 cm from all persons and must not be co-located or operating in conjunction with any other antenna or transmitter.

Important FCC notice:

In accordance with FCC Part 15C this module is listed as a Full Modular Transmitter device.

Changes or modifications not expressly approved by the manufacturer could void the user's authority to operate the equipment.

Therefore, the final host product must be submitted to AKCP for confirmation that the installation of the module into the host is in compliance with the regulations of FCC and IC Canada. Specifically, if an antenna other than the model documented in the Filing is used, a Class 2 Permissive Change must be filed with the FCC.

The antenna of this transmitter must not be co-located or operating in conjunction with any other antenna or transmitters within a host device, except in accordance with FCC multitransmitter product approval procedures.

FCC Label Instructions

*The outside of final products that contains this module device must display a label referring to the enclosed module. This exterior label can use wording such as the following: "**Contains Transmitter Module FCC ID: 2ARUS-LRM9B**" or "**Contains FCC ID: 2ARUS-LRM9B**". Any similar wording that expresses the same meaning may be used.*

Additionally, there must be the following sentence on the device, unless it is too small to carry it: "This device complies with part 15 of the FCC Rules. Operation is subject to the following two conditions: (1) This device may not cause harmful interference, and (2) this device must accept any interference received, including interference that may cause undesired operation."

CONFIDENTIAL

SIMPLIFIED EU DECLARATION OF CONFORMITY

The simplified EU declaration of conformity referred to in Article 10(9) shall be provided as follows:

Hereby, AKCP declares that the radio equipment type AKCP LoRa Radio Module LRM8 is in compliance with Directive 2014/53/EU.

The full text of the EU declaration of conformity is available at the following internet address: https://www.akcp.com/sales-information/certifications/

Contact in EU: Project Office, 4th Floor, Fasaneninsel 1, Kraftsdorf, D-07548 GERA, Germany

CONFIDENTIAL

Please contact support@akcp.com if you have any further technical questions or problems.

Thanks for Choosing AKCP!

CONFIDENTIAL