DL2-7112

©DARTSLIVE CO., Ltd.

DARTSLIVE 2 (EX TYPE)

OWNER'S MANUAL

DL2-7112

EX TYPE

OWNER'S MANUAL

IMPORTANT

- Before using this product, read this manual carefully to understand the contents.
- After reading this manual, be sure to keep it near the product or in a convenient place for easy reference when necessary.

WEEE Statement

The WEEE (Waste of Electrical and Electronic Equipment) directive places an obligation on all EU based manufacturers and importers of Electrical and Electronic Equipment to take back products at the end of their useful life. Sega Amusements Europe Ltd accepts its responsibility to finance the cost of treatment and recovery of redundant WEEE in the United Kingdom in accordance with the specified WEEE recycling requirements.

The following symbol will be on all products manufactured from 13th August 2005, which indicates this product must NOT be disposed of with other normal waste. Instead, it is the user's responsibility to dispose of their waste equipment by arranging to return it to a designated UK collection point for the correct recycling of waste electrical and electronic equipment.

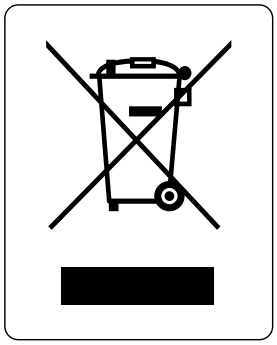

For more information about where you can send your waste equipment for recycling contact your local authority office.

Battery Recycling Statement

The EC Directive on Batteries and Accumulators (2006/66/EC) aims to minimize the impact of batteries on the environment and encourage the recovery of the materials they contain. To achieve increased collection and recycling of waste batteries, the Directive places 'producer responsibility' obligations on manufacturers and importers of portable, industrial and automotive batteries.

The following symbol will be on all equipment fitted with batteries from 26th September 2008 and indicates they must NOT be disposed of with other normal waste. Instead, it is the user's responsibility to dispose of used batteries by arranging to return them to a designated collection point for the correct recycling of waste batteries.

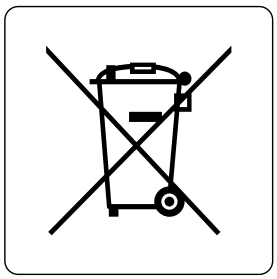

For more information about where you can send your waste batteries for recycling contact your local authority office.

Microsoft Software License Terms for:

Windows® XP Embedded Runtime

These license terms are an agreement between you and *DARTSLIVE Co., Ltd.* Please read them. They apply to the software included on this device. The software also includes any separate media on which you received the software.
The software on this device includes software licensed from Microsoft Corporation or its affiliate.
The terms also apply to any Microsoft

- Updates,
- Supplements,
- Internet-based services, and
- Support services

for this software, unless other terms accompany those items. If so, those terms apply. If you obtain updates or supplements directly from Microsoft, then Microsoft, and not *DARTSLIVE Co., Ltd.*, licenses those to you.

As described below, using some features also operates as your consent to the transmission of certain standard computer information for Internet-based services.
By using the software, you accept these terms. If you do not accept them, do not use or copy the software. Instead, contact *DARTSLIVE Co., Ltd.* to determine its return policy for a refund or credit.
If you comply with these license terms, you have the rights below.

1. **Use Rights.**
   You may use the software on the device with which you acquired the software.
2. **Additional Licensing Requirements and/or Use Rights.**
   a. **Specific Use.** *DARTSLIVE Co., Ltd.* designed this device for a specific use. You may only use the software for that use.
   b. **Other Software.** You may use other programs with the software as long as the other programs
      - Directly support the manufacturer's specific use for the device, or
      - Provide system utilities, resource management, or anti-virus or similar protection.

      Software that provides consumer or business tasks or processes may not be run on the device. This includes email, word processing, spreadsheet, database, scheduling and personal finance software. The device may use terminal services protocols to access such software running on a server.
   c. **Device Connections.**
      - You may use terminal services protocols to connect the device to another device running business task or processes software such as email, word processing, scheduling or spreadsheets.
      - You may allow up to ten other devices to access the software to use
        - File Services,
        - Print Services,
        - Internet Information Services, and
        - Internet Connection Sharing and Telephony Services.

        The ten connection limit applies to devices that access the software indirectly through "multiplexing" or other software or hardware that pools connections. You may use unlimited inbound connections at any time via TCP/IP.
3. **Scope of License.**
   The software is licensed, not sold. This agreement only gives you some rights to use the software. *DARTSLIVE Co., Ltd.* and Microsoft reserve all other rights. Unless applicable law gives you more rights despite this limitation, you may use the software only as expressly permitted in this agreement. In doing so, you must comply with any technical limitations in the software that allow you to use it only in certain ways. For more information, see the software documentation or contact *DARTSLIVE Co., Ltd.* Except and only to the extent permitted by applicable law despite these limitations, you may not:
   - Work around any technical limitations in the software;
   - Reverse engineer, decompile or disassemble the software;
   - Make more copies of the software than specified in this agreement;
   - Publish the software for others to copy;
   - Rent, lease or lend the software; or
   - Use the software for commercial software hosting services.

Except as expressly provided in this agreement, rights to access the software on this device do not give you any right to implement Microsoft patents or other Microsoft intellectual property in software or devices that access this device.
You may use remote access technologies in the software such as Remote Desktop to access the software remotely from another device. You are responsible for obtaining any licenses required for use of these protocols to access other software.

- Remote Boot Feature. If the *DARTSLIVE Co., Ltd.* enabled the device Remote Boot feature of the software, you may
  (i) use the Remote Boot Installation Service (RBIS) tool only to install one copy of the software on your server and to deploy the software on licensed devices as part of the Remote Boot process; and
  (ii) use the Remote Boot Installation Service only for deployment of the software to devices as part of the Remote Boot process; and
  (iii) download the software to licensed devices and use it on them.
  For more information, please refer to the device documentation or contact *DARTSLIVE Co., Ltd.*
- Internet-Based Services. Microsoft provides Internet-based services with the software. Microsoft may change or cancel them at any time.
  a. **Consent for Internet-Based Services.** The software features described below connect to Microsoft or service provider computer systems over the Internet. In some cases, you will not receive a separate notice when they connect. You may switch off these features or not use them. For more information about these features, visit
     http://www.microsoft.com/windowsxp/downloads/updates/sp2/docs/privacy.mspx.
     By using these features, you consent to the transmission of this information. Microsoft does not use the information to identify or contact you.
  b. **Computer Information.** The following features use Internet protocols, which send to the appropriate systems computer information, such as your Internet protocol address, the type of operating system, browser and name and version of the software you are using, and the language code of the device where you installed the software. Microsoft uses this information to make the Internet-based services available to you.
     - ***Web Content Features.*** Features in the software can retrieve related content from Microsoft and provide it to you. To provide the content, these features send to Microsoft the type of operating system, name and version of the software you are using, type of browser and language code of the device where the software was installed. Examples of these features are clip art, templates, online training, online assistance and Appshelp. These features only operate when you activate them. You may choose to switch them off or not use them.
     - ***Digital Certificates.*** The software uses digital certificates. These digital certificates confirm the identity of Internet users sending X.509 standard encrypted information. The software retrieves certificates and updates certificate revocation lists. These security features operate only when you use the Internet.
     - ***Auto Root Update.*** The Auto Root Update feature updates the list of trusted certificate authorities. You can switch off the Auto Root Update feature.
     - ***Windows Media Player.*** When you use Windows Media Player, it checks with Microsoft for
       - Compatible online music services in your region;
       - New versions of the player; and
       - Codecs if your device does not have the correct ones for playing content. You can switch off this feature. For more information, go to:
         http://microsoft.com/windows/windowsmedia/mp10/privacy.aspx.

- ***Windows Media Digital Rights Management.*** Content owners use Windows Media digital rights management technology (WMDRM) to protect their intellectual property, including copyrights. This software and third party software use WMDRM to play and copy WMDRM-protected content. If the software fails to protect the content, content owners may ask Microsoft to revoke the software' s ability to use WMDRM to play or copy protected content. Revocation does not affect other content. When you download licenses for protected content, you agree that Microsoft may include a revocation list with the licenses. Content owners may require you to upgrade WMDRM to access their content. Microsoft software that includes WMDRM will ask for your consent prior to the upgrade. If you decline an upgrade, you will not be able to access content that requires the upgrade. You may switch off WMDRM features that access the Internet. When these features are off, you can still play content for which you have a valid license.

c. *Misuse of Internet-based Services.* You may not use these services in any way that could harm them or impair anyone else's use of them. You may not use the services to try to gain unauthorized access to any service, data, account or network by any means.

4. **Windows Update Agent (also known as Software Update Services).**
The software on the device includes Windows Update Agent ("WUA") functionality that may enable your device to connect to and access updates ("Windows Updates") from a server installed with the required server component. Without limiting any other disclaimer in this Micrososoft Software License Terms or any EULA accompanying a Windows Update, you acknowledge and agree that no warranty is provided by MS, Microsoft Corporation or their affiliates with respect to any Windows Update that you install or attempt to install on your device.
5. **Product Support.**
Contact *DARTSLIVE Co., Ltd.* for support options. Refer to the support number provided with the device.
6. **Proof of License.**
If you acquired the software on the device, or on a disc or other media, a genuine Certificate of Authenticity label with a genuine copy of the software identifies licensed software. To be valid, this label must be affixed to the device, or included on or in *DARTSLIVE's* software packaging. If you receive the label separately, it is not valid. You should keep the label on the device or packaging to prove that you are licensed to use the software. To identify genuine Microsoft software, see http://www.howtotell.com.
7. **Transfer to a Third Party.**
You may transfer the software only with the device, the Certificate of Authenticity label, and these license terms directly to a third party. Before the transfer, that party must agree that these license terms apply to the transfer and use of the software. You may not retain any copies of the software including the backup copy.
8. **Not Fault Tolerant.**
The software is not fault tolerant. *DARTSLIVE Co., Ltd.* installed the software on the device and is responsible for how it operates on the device.
9. **Restricted Use.**
The Microsoft software was designed for systems that do not require fail-safe performance. You may not use the Microsoft software in any device or system in which a malfunction of the software would result in foreseeable risk of injury or death to any person. This includes operation of nuclear facilities, aircraft navigation or communication systems and air traffic control.
10. **No Warranties for the Software.**
The software is provided "as is". You bear all risks of using it. Microsoft gives no express warranties, guarantees or conditions. Any warranties you receive regarding the device or the software do not originate from, and are not binding on, Microsoft or its affiliates. When allowed by your local laws, *DARTSLIVE Co., Ltd.* and Microsoft exclude implied warranties of merchantability, fitness for a particular purpose and non-infringement.

11. Liability Limitations.

You can recover from Microsoft and its affiliates only direct damages up to two hundred fifty U.S. Dollars (U.S. $250.00). You cannot recover any other damages, including consequential, lost profits, special, indirect or incidental damages.

This limitation applies to:

- **Anything related to the software, services, content (including code) on third party internet sites, or third party programs; and**
- **Claims for breach of contract, breach of warranty, guarantee or condition, strict liability, negligence, or other tort to the extent permitted by applicable law.**

It also applies even if Microsoft should have been aware of the possibility of the damages. The above limitation may not apply to you because your country may not allow the exclusion or limitation of incidental, consequential or other damages.

12. Export Restrictions.

The software is subject to United States export laws and regulations. You must comply with all domestic and international export laws and regulations that apply to the software. These laws include restrictions on destinations, end users and end use. For additional information, see www.microsoft.com/exporting.

BEFORE USING THE PRODUCT, BE SURE TO READ THE FOLLOWING:

To maintain safety:

The following instructions are intended for the users, operators and the personnel in charge of the operation of the product. To ensure the safe operation of this product, be sure to follow the instructions. Read and underatand the warning messages and safety guidelines thoroughly and handle the product appropriately. Keep this manual close to the product or in a convenient place for future reference.

Herein, explanations which require special attention are enclosed with dual lines. Depending on the potentially hazardous degrees, the terms of DANGER, WARNING, CAUTION, etc. are used. Be sure to understand the contents of these terms before reading the main text.

Indicates that mishandling the product by disregarding this pictograph will cause severe injury or death.

Indicates that mishandling the product by disregarding this warning will cause a potentially hazardous situation which can result in death or serious injury.

Indicates that mishandling the product by disregarding this caution will cause a potentially hazardous situation which can result in minor injury and/or material damage.

For the safe usage of the product, the following pictographs are used:

Indicates "HANDLE WITH CARE." In order to protect the human body and equipment, this display is attached to places where the instruction manual should be referred to.

- **In the case where warning labels are soiled or peel off, replace them immediately.**
  To ensure safety for the customers, labels and printed instructions describing potentially hazardous situations are applied to places where accidents can be caused. If any label is peeled off, apply it again immediately.

- In the case where commercially available monitors and printers are used in this product, only the contents relating to this product are explained herein. Some commercially available equipment has functions and reactions not stated in this manual. Read this manual together with the specific instruction manual of such equipment.

* *Descriptions herein contained may be subject to improvement changes without notice.*
* *The contents described herein are fully prepared with due care. However, should any question arise or errors be found, please contact DARTSLIVE Co., Ltd.*

INSPECTIONS THE PRODUCT IMMEDIATELY AFTER TRANSPORTING TO THE LOCATION

Normally, DARTSLIVE Co., Ltd. products are despatched in a status allowing for immediate usage after transporting to the location. Nevertheless, an irregular situation may occur during transportation. Before turning on the power, check the following points to ensure that the product has been transported in a satisfactory status.

☐ Are there any dented portions or defects (cuts, etc.) on the packaging and/or cabinet surface?
☐ Are casters and adjusters damaged?
☐ Do power cords have cuts and dents?
☐ Are all accessories available?

TABLE OF CONTENTS

Microsoft Software License Terms for:

BEFORE USING THE PRODUCT, BE SURE TO READ THE FOLLOWING:

TABLE OF CONTENTS i

INTRODUCTION ii

1 HANDLING PRECAUTIONS 1

2 INSTALLATION LOCATION PRECAUTIONS 4

2-1 LIMITATION OF USAGE 5
2-2 OPERATION AREA 6

3 PRODUCT OPERATION PRECAUTIONS 7

3-1 OPERATION PRECAUTIONS 7
3-2 DURING OPERATION (PAY ATTENTION TO CUSTOMERS) 9

4 PART DESCRIPTIONS 10

5 ACCESSORIES 11

6 PLAYING THE GAME 14

6-1 OUTLINE 14
6-2 COMPONENTS 15
6-2-1 DARTSLIVE Members Card (IC Card) 15
6-2-2 Rankings 16
6-3 HOW TO PLAY 17
6-3-1 How to Start the Game 17
6-3-2 Shortcut Functions 17
6-4 USING IC CARDS 18
6-4-1 IC Cards 18
6-4-2 IC CARD SYSTEM OVERVIEW 18
6-4-3 IC Card Usage 18
6-4-4 Removing IC Cards 20
6-4-5 Checking Data on IC Cards 21
6-4-6 Registering Home Shop Using IC Card 21
6-4-7 Rating and Flight 21
6-5 HELP 22
6-6 PLAYING OPTION 23
6-7 “DARTSLIVE2” SIMPLE HIERARCHICAL DIAGRAM 27
6-8 GAME RULES 28

7 PERIODIC INSPECTION 29

8 DESIGN RELATED PARTS 31

INTRODUCTION

This manual provides detailed descriptions together with all the necessary information covering the general operation of servicing control, spare parts, etc. for the product, "**DARTSLIVE2**."

This manual describes the DX (Deluxe) Type, so the format of the photographs and illustrations may differ.

This manual is intended for the owners, personnel and managers in charge of operation of the product.
Operate the product after carefully reading and sufficiently understanding the instructions.

In the unlikely event that the product does not function correctly, DO NOT allow anyone other than a technician to touch the internal system. Turn off the power to the machine, making sure to unplug the electrical cord from the outlet, and contact the office listed in this manual or the point of purchase for this product.

In this manual the information which unlikely to cause physical injuries or damage to property that are subject to compensation, but highly important are indicated by the term "IMPORTANT" and the symbol below and enclosed in bold lines.

STOP IMPORTANT

Indicates important information that, if ignored, may result in the mishandling of the product and cause faulty operation or damage to the product.

SPECIFICATIONS

Installation space	650 mm [Width] x 574mm [Depth]
Height	2,395 mm
Weight	124 kg
Power, maximum current	145 W, 1.6 A (AC 110 V, 50 Hz Area)
	134 W, 0.75 A (AC 220 V, 50 Hz Area)
Monitor	24 type wide LCD monitor

1 HANDLING PRECAUTIONS

When installing or inspecting the product, be very careful of the following points and pay attention to ensure that the player can enjoy the game safely. Inappropriate handling which does not comply with the following points and other precatious points stated in this manual can cause accidents resulting in injury or damage to the product.

⚠WARNING

- **Turn off the power before working on the machine. Working on the machine without turning off the power can cause an electric shock or short circuit. In the case work should be performed in the power on status, this manual always states to that effect.**
- **To avoid an electric shock or short circuit, do not plug in or unplug abruptly.**
- **To avoid an electric shock, do not plug in or unplug with wet hands.**
- **Do not expose power cords or ground wires on the surface, (floor, passage, etc.). If exposed, the power cords and ground wires are susceptible to damage. Damaged cords and wires can cause an electric shock or short circuit.**
- **To avoid causing a fire or an electric shock, do not place objects on the power cords or damage them.**
- **When, or after installing the product, do not unnecessarily pull the power cord. If damaged, the power cord can cause a fire or an electric shock.**
- **In case the power cord is damaged, ask for a replacement through where the product was purchased from or the office herein stated. Using the damaged cord can cause fire, an electric shock or electricity leakage.**
- **The product must be grounded appropriately. Inappropriate grounding can cause an electric shock.**
- **Connect IC board and other wire and harnesses properly. Insufficient insertion can cause an electric shock.**
- **Do not make specification changes (removal and/or conversion of equipments) that are not designated by DARTSLIVE Co., Ltd.**

  - **Failure to follow the above caution may cause a fire or an electric shock. Non-compliance with this instruction can have a bad influence upon physical conditions of the players and/or the onlookers, or result in injury during play.**
  - **DARTSLIVE Co., Ltd. shall not be held responsible for damage and/or compensation for damage to a third party, caused by specification changes not designated by DARTSLIVE Co., Ltd.**

STOP IMPORTANT

- **When checking the circuitry of the IC board, use a logic tester only. Ordinary testers cannot be used.**
- **Static electricity from your body may damage some electronics devices on the IC board. Before handling the IC board, touch a grounded metallic surface so that the static electricity can be discharged.**
- **Some parts are not designed nor manufactured specifically for this game machine. The manufacturers may discontinue, or change the specifications of, such general-purpose parts. If this is the case, DARTSLIVE Co., Ltd. cannot meet repair or replacement requests whether or not a warranty period has expired.**

CONCERNING THE STICKER DISPLAY

This DARTSLIVE Co., Ltd. product has stickers attached describing the product manufacture No. (Serial No.) and Electrical Specifications. It also has a sticker describing where to contact for repair and for purchasing parts. When making inquiries regarding repairs, mention the Serial No. and Name of Machine indicated on the Sticker.
The Serial Number indicates the product register. Identical machines could have different parts depending on the date of production. Also, improvements and modifications might have been made after the publication of this manual. In order to correspond appropriately to your inquiry, mention the Serial No. .

NOTE: The illustrations indicate Product Liability related warning labels and stickers to be used in the countries where English is the official language. In the countries where a language other than English is used for the official language, the illustrated warning labels and stickers in the applicable official language will be used.

CONCERNING THE WARNING DISPLAYS

This DARTSLIVE Co., Ltd. product has warning messages on stickers, labels and/or printed instructions adhered/attached to or incorporated in the places where a potentially hazardous situation could arise. The warning messages are intended for accident prevention for customers and also for avoiding hazardous situations relating to maintenance and servicing work. Some portions of the cabinet contain high voltage and may cause accidents if touched.
When performing maintenance, be very careful of the warning messages. It is especially important that any complex repair and replacement work not mentioned herein should be performed by those technical personnel who have knowledge of electricity and technical expertise. In order to prevent accidents, caution any customer ignoring the warnings to cease and desist immediately.

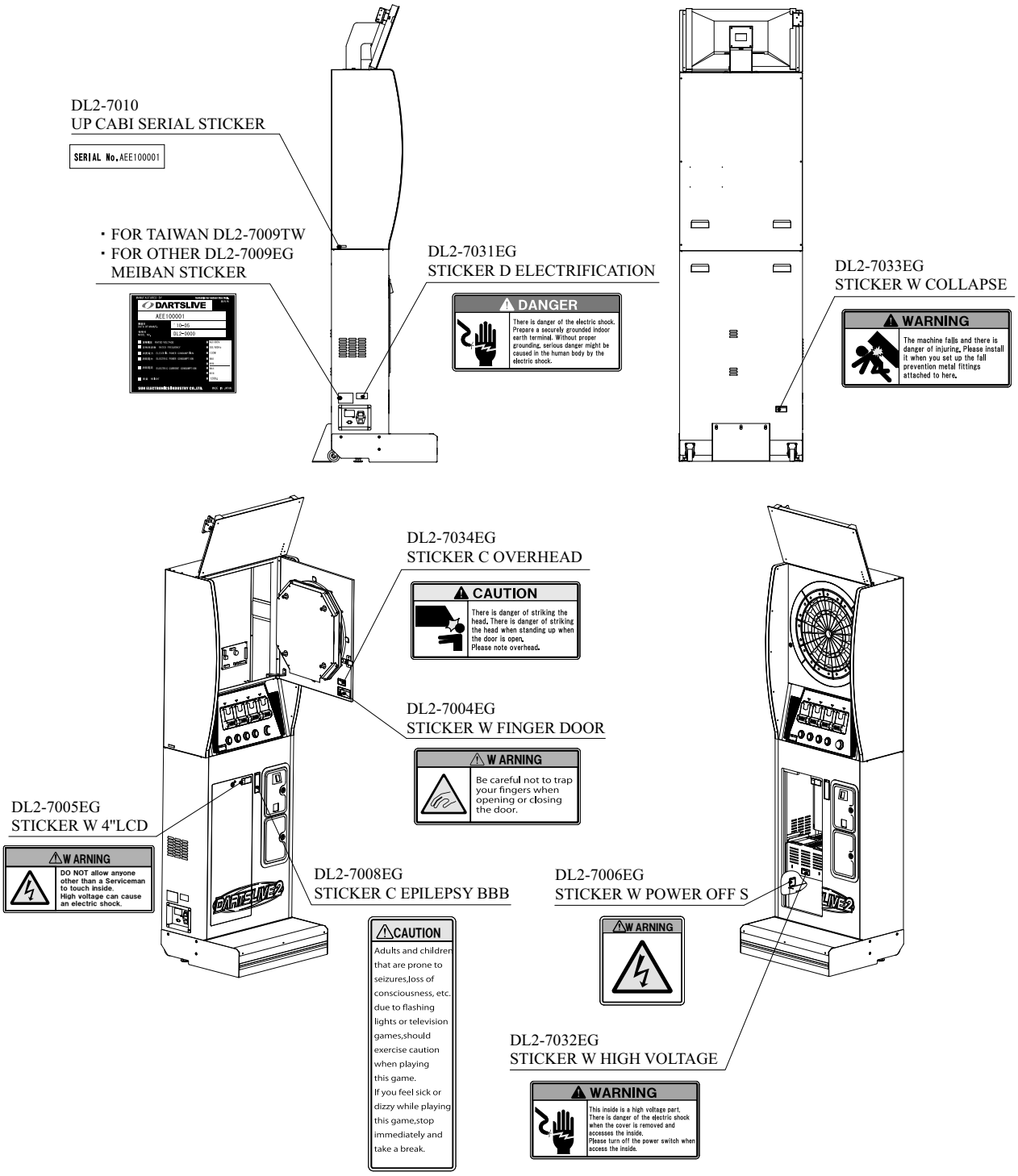
DL2-7010
UP CABI SERIAL STICKER
SERIAL No.AEE100001
・FOR TAIWAN DL2-7009TW
・FOR OTHER DL2-7009EG
MEIBAN STICKER
DARTSLIVE
DL2-7031EG
STICKER D ELECTRIFICATION
DANGER
There is danger of the electric shock. Prepare a securely grounded indoor earth terminal. Without proper grounding, serious danger might be caused in the human body by the electric shock.
DL2-7033EG
STICKER W COLLAPSE
WARNING
The machine falls and there is danger of injuring. Please install it when you set up the fall prevention metal fittings attached to here.
DL2-7034EG
STICKER C OVERHEAD
CAUTION
There is danger of striking the head. There is danger of striking the head when standing up when the door is open. Please note overhead.
DL2-7004EG
STICKER W FINGER DOOR
W ARNING
Be careful not to trap your fingers when opening or closing the door.
DL2-7005EG
STICKER W 4"LCD
W ARNING
DO NOT allow anyone other than a Serviceman to touch inside. High voltage can cause an electric shock.
DL2-7008EG
STICKER C EPILEPSY BBB
CAUTION
Adults and children that are prone to seizures,loss of consciousness, etc. due to flashing lights or television games,should exercise caution when playing this game. If you feel sick or dizzy while playing this game,stop immediately and take a break.
DL2-7006EG
STICKER W POWER OFF S
W ARNING
DL2-7032EG
STICKER W HIGH VOLTAGE
WARNING
This inside is a high voltage part. There is danger of the electric shock when the cover is removed and accesses the inside. Please turn off the power switch when access the inside.

2 INSTALLATION LOCATION PRECAUTIONS

⚠WARNING

- This product is an indoor game machine. Do not install it outside, Even indoors, avoid installing in places mentioned below so as not to cause a fire, electric shock, injury and/or malfunction.
  - Places subject to rain or water leakage, or places subject to high humidity such as indoor swimming pool and/or shower, etc., or places where a water jet (high pressure washing device) could be used.
  - Places subject to direct sunlight, or places subject to high temperatures such as heating units, etc.
  - Places filled with inflammable gas or vicinity of highly inflammable/volatile chemicals or hazardous materials.
  - Dusty places.
  - Places subject to violent vibrations.
  - Places subject to any type of violent impact.
  - Places in the vicinity of anti-disaster facilities such as fire exits and fire extinguishers.
  - Areas where the temperature exceeds the applicable temperature (ambient temperature) range of 5 to 30 degrees centigrade.
- Install the product by fastening the back of it to the wall. Do not leave the product unattended in places where people will pass by. Doing so could result in injuries from players throwing darts and accidentally hitting passersby.
- Fasten the back of the product firmly to the wall. Do not attach it to walls made of the following materials. Doing so could cause the product to tip over and result in accidents.

  [Mortar, plaster, plywood and other friable materials that cannot hold the product]
- Use bolts suitable for the wall material to fasten the brackets to the wall. Failure to do so could cause the product to tip over and result in accidents.

2-1 LIMITATION OF USAGE

⚠WARNING

- **Be sure to check the electrical specifications. Ensure that this product is compatible with the location's power supply, voltage, and frequency. A plate describing electrical specifications is attached to the product. Non-compliance with the electrical specifications can cause a fire and electric shock.**
- **This product requires a breaker and earth mechanism as part of the location facilities. Using the product without these can cause a fire and electric shock.**
- **Ensure that the indoor wiring for the power supply is rated at 15 A or higher (AC 100 V – 120 V area), and 7 A or higher (AC 220 V – 240 V area). Noncompliance with the Electrical Specifications can cause a fire and electric shock.**
- **Be sure to use an independent power supply equipped with an earth leakage circuit breaker. Using a power supply without an earth leakage circuit breaker can cause an outbreak of fire if an electricity leakage occurs.**
- **Putting many loads on one electrical outlet can cause generation of heat and a fire resulting from overload.**
- **When using an extension cord, ensure that the cord rated at 15 A or higher (AC 100 V – 120 V area) and 7 A or higher (AC 220 V – 240 V area). Using a cord rated other than the specified rating can cause a fire and electric shock.**

Electricity Consumption

MAX. 1.0 A	AC 110 V, 50 Hz Area
MAX. 0.75A	AC 220 V, 50 Hz Area

2-2 OPERATION AREA

⚠WARNING

- **For safe operation, use and operate this product in an area measuring at least 0.8 m in width and 4 m in depth.**
- **Be sure to provide sufficient space for ventilation specified in this manual. Do not block the ventilation ports. It can cause generation of heat and a fire.**
- **DARTSLIVE Co., Ltd. shall not be held responsible for damage and/or compensation for damage to a third party, resulting from the failure to observe this instruction.**

STOP IMPORTANT

To install this product, the entrance must be at least 0.4m in width and 1.2 m in height.

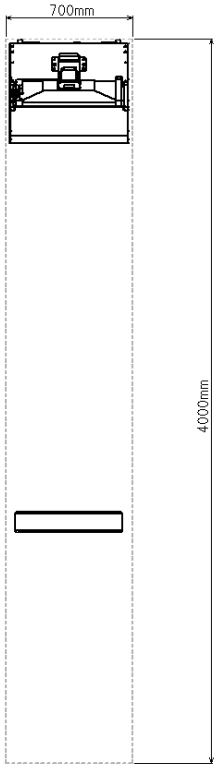

2 FIG. 01

When using this product and other darts machines side by side, leave a space of 0.25 m between the cabinets. The door on the board will be opened for service maintenance. If the cabinets are too close together, it could result in accidents during maintenance work.

3 PRODUCT OPERATION PRECAUTIONS

For safe operations of the product, follow the instructions below.

3-1 OPERATION PRECAUTIONS

⚠WARNING

In order to avoid accidents, check the following before starting the operation:

- **To prevent accidents that can cause headaches and/or weaken health conditions, ensure that where the product is operated has sufficient lighting to allow any warnings to be read.**

  Operation under insufficient lighting can cause bodily contact with each other, hitting accident, and/or unforeseen troubles.
- **Make sure to perform appropriate adjustment of the monitor. Do not operate the product when the screen is flickering, distorted, or experiencing other abnormalities. Images from an improperly adjusted screen could cause players and other customers to experience dizziness, headaches, and other ailments.**
- **It is suggested to reserve a space for players who feel sick while playing the game to take a rest.**
- **Check if all of the adjusters are in contact with the floor surface. If they are not, the cabinet can move and cause an accident.**
- **Do not put any heavy item on this product. Placing any heavy item on the product can cause a falling down accident or parts damage.**
- **Do not climb on the product. Climbing on the product can cause falling down accidents. To check the top portion of the product, use a step ladder.**
- **To avoid electric shock, check to see if door & cover parts are damaged or omitted.**
- **Do not place the following items on top of the product, nearby the LCD unit, nearby the product or hang them from the ceiling. Doing so could result in electric shock, short circuits and/or damage to the parts.**

  Flower vases, flowerpots, cups, water tanks, cosmetics, and receptacles/ containers/vessels containing chemicals and water.
- **Make sure the product is firmly fastened to the wall. Failure to do so could cause the product to tips over and result in accidents.**

⚠CAUTION

- When cleaning the product daily, always check to make sure there are no scratches on the face door (dart board), or on the surface of the card reader where players touch them, and that the screws holding it in place are not loose. If a player uses the machine while it is damaged, cracked, or has a loose screw, the player may get injured.
- To avoid accidents, be sure to provide sufficient space by considering the potentially crowded situation at the installation location. Insufficient installation space can cause making bodily contact with each other, hitting accidents, and/or trouble between customers.
- Always check to make sure there are no foreign materials in the card reader. Foreign materials could damage the parts or cause read/write errors.

3-2 DURING OPERATION (PAY ATTENTION TO CUSTOMERS)

To avoid accidents and trouble, pay attention to the behavior of visitors and players.

⚠WARNING

- **For safety reasons, do not allow any of the following people to play the game.**
  - **Those who need assistance when walking.**
  - **Those who have high blood pressure and/or a heart problem.**
  - **Those who have experienced muscle convulsion or loss of consciousness when playing video games, etc.**
  - **Those who have neck or spinal cord problems.**
  - **Those who are intoxicated or under the influence of drugs.**
  - **Persons who disregard the product's warning displays.**
- **Instruct those who feel sick during play to have a medical examination.**
- **To avoid injury from falls and electric shocks due to spilled drinks, instruct the player not to place heavy items or drinks on the product.**
- **To avoid electric shocks and short circuits, do not allow customers to put hands and fingers or extraneous material in the openings of the product or small openings in or around the doors.**
- **To avoid falls and resulting injury, immediately stop the customer from leaning against or climbing on the product, etc.**
- **To avoid electric shock and short circuit, do not allow customers to unplug the power plug without a justifiable reason.**

⚠CAUTION

- **Even players who have never been adversely affected by light stimulus might experience dizziness or headache depending on their physical conditions when playing the game. Small children are especially likely to experience these symptoms. Caution guardians of small children to supervise their children during play.**
- **Immediately stop violent acts such as hitting and/or kicking the product. Such violent acts can cause parts damage or falling down accident, and injuries from fagments.**
- **Insert the card in the direction of the arrow so that the front of the card is visible. Inserting it incorrectly could result in communication errors. In such a case, remove the card and reinsert it correctly.**

4 PART DESCRIPTIONS

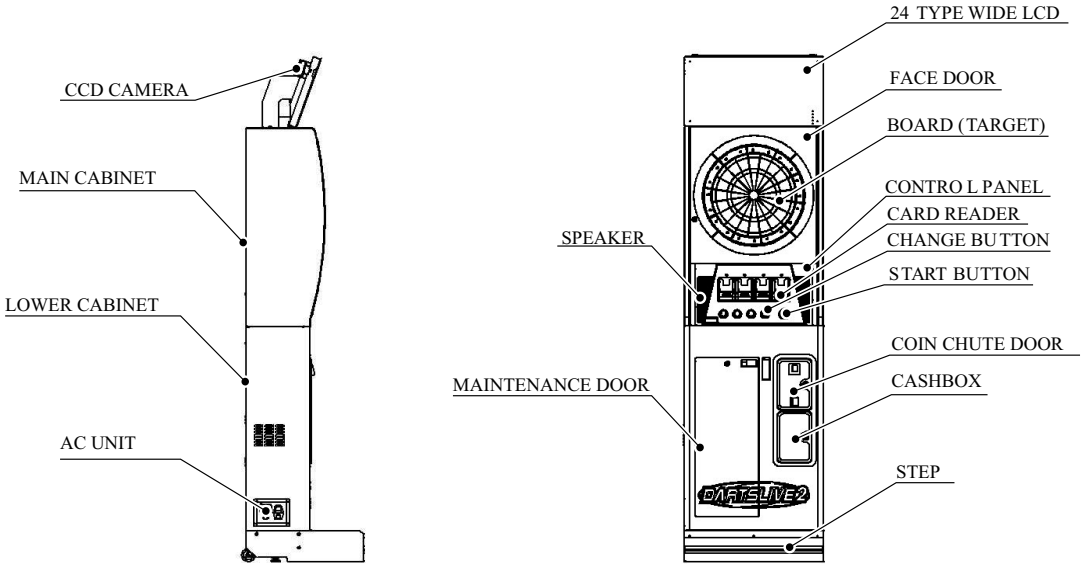

4 TABLE 01 Dimensions and Weights for major Parts

ITEMS	Width x Depth x Height	Weight
LCD UNIT	650 mm x 277 mm x 340 mm	8kg
MAIN CABINET	650 mm x 370mm x 947mm	42kg
LOWER CABINET	650 mm x 300 mm x 1,114 mm	63kg
STEP	650 mm x 553 mm x 148 mm	11 kg
ASSEMBLED	650 mm x574 mm x2,395mm	124 kg

5 ACCESSORIES

Confirm that the accessories listed in the table below are present when se
"Spare" in the "Use etc." column are expendable parts, and have therefore been included as spare parts.

5 TABLE 01 ACCESSORIES

Part name:	OWNER'S MANUAL
Part no. (quantity):	DL2-7112 (1)
Use etc.:	This manual
Diagram	

Parts not labeled with part numbers are as yet unregistered or cannot be registered. Be sure to handle all parts with care, as some parts are not available for purchase separately.

SERVICEMAN MANUAL
DL2-7111 (1)

MAINTENANCE KEY
220-5793-2-A001 (2)

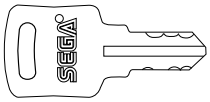

COIN CHUTE DOOR KEY
220-5793-2-A002 (1)

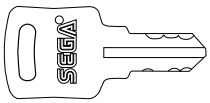

CASHBOX KEY
(2)
The keys are placed inside the coin chute box for shipping.

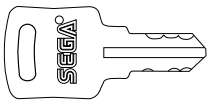

LAN CABLE 10 m
For installation
LD-CT/BU10/RS(1)

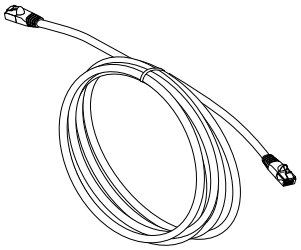

AC CABLE (Power Cord)

For installation
ACJ-3PS-02(1)
(AC 110V,50Hz Area)

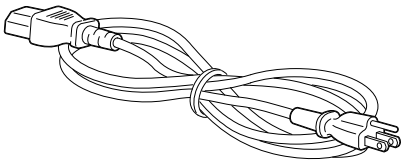

For installation
AT-PWC-015BS(1)
(AC 220V,50Hz Area)

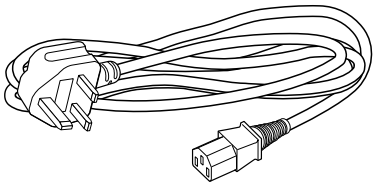

HEXAGON BOLT
M8×16(5)
For installation

SCREW
M4×8(2)
For installation

FLANGE NUT(1)
For groundng the earth wire

EYE BOLT
B -130-8(4)
For installation

LOWER L BRACKET(1)
For installation

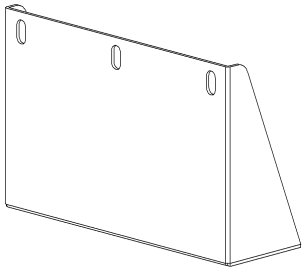

LCD CABLE COVER(1)
For installation

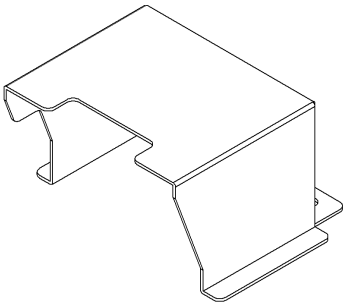

THROW LINE STICKER
DL2-7011 (1)

6 PLAYING THE GAME

6-1 OUTLINE

"DARTSLIVE2" is equipped with a network function to connect the shop (place where the DARTS machine is installed), DARTSLIVE members' card ("IC card"), customers (PC, etc.) and "TouchLive" to each other.

Through the use of a network, various gameplay elements are provided for a more engaging and enjoyable DARTS experience.

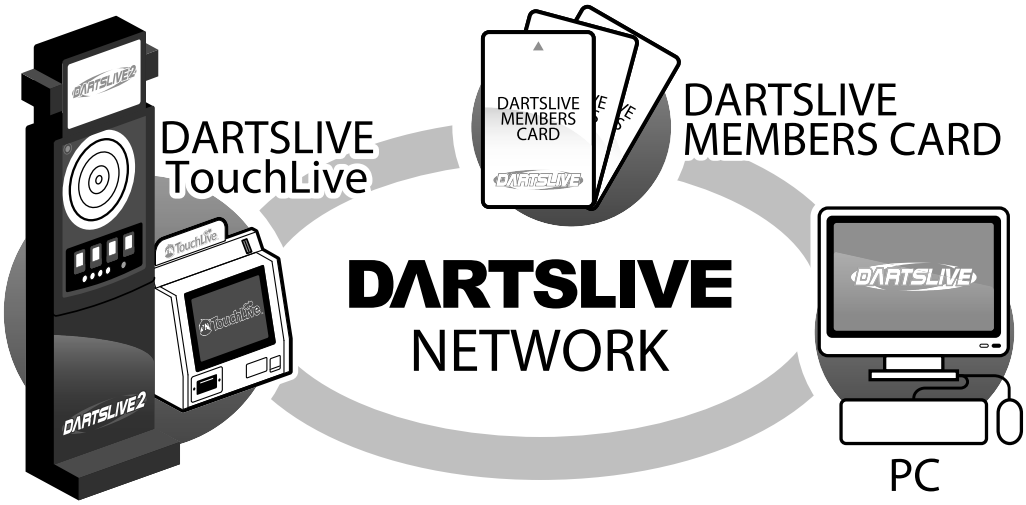

6-1 FIG. 01

Connecting DARTS machines all over the country via a network has enabled the following new gameplay elements and services:

- Ranking (nation-wide and by shop)
- Individual score management
- Past competition results
- Information sharing between friends and within groups
- Display of personalized messages on the DARTS machine
- Home shop registration (enhancing shop and customer relationship)
- Limited-time-only events

"DARTSLIVE2" introduces the following new games and services:

- Network play
- Screen customization
- Video display using a camera
- Handle name setting function
- Group flag function

6-1 FIG. 02

6-2 COMPONENTS

6-2-1 DARTSLIVE Members Card (IC Card)

Use of an IC card enables browsing and management of personal data stored on the “DARTSLIVE server” (the “server”). A single card can be used to manage flights, ratings, stats, wins/losses and other records.
Player’s name and competition records can also be displayed on the machine. These IC cards can be used on “DARTSLIVE2” and “TouchLive” at any shop connected to the network.

NOTE: Game data on machines without network support will not be updated.

In conjunction with the network (PC, etc.) service, there are functions enabling performance level monitoring, sharing of information with group members, group rankings and home shop registration system for enhancing shop and customer relationship.

Official DARTSLIVE website: <http://www.dartslive.com/>

IC cards are sold to customers at shops where DARTSLIVE is installed.

There is a space for writing your name on the back of the card. After purchasing a card, write your name on it to avoid confusion with other customers.

6-2-1 FIG. 01

6-2-2 Rankings

When online, the machine can be set to always display the latest nation-wide rankings. The following games' rankings can be viewed:

- COUNT-UP
- CRICKET COUNT-UP
- EAGLE'S EYE

The latest nation-wide and shop rankings are displayed during the advertising mode (standby mode).
The window is brought up by placing the cursor over the name of the game on the submenu and tapping the board.

- Nation-wide/in-store rankings
- Results of previous game
- Rules

The " 店内ランキング " (in-store rankings) are displayed when one of the Start Buttons (P1-P4) is pressed while viewing the " 全国ランキング " (nation-wide rankings).

6-2-2 FIG. 01

6-2-2 FIG. 02

Various rankings are available on the official DARTSLIVE website in addition to personal records.

6-3 HOW TO PLAY

Basic operation: Select game

● Start Button

Yellow Button	When selecting category	Set category.
P1-P4 Button	When selecting game	Set number of players.

● Change Button

Red Button	When selecting category or game	Move cursor.
	During game	Go to next round. Change players.

6-3-1 How to Start the Game

1 Insert the IC card into the card reader. For doubles, insert 2 cards together into the same reader one on top of the other.
Skip this step if an IC card is not used.

2 Choose the game category you want to play on the Main Menu screen. Use the Change Button to move the cursor and press one of the Start Buttons (P1-P4) to confirm the selection.

3 The number of credits necessary for the number of players is displayed in a box at the bottom left of the screen. Insert the necessary number of coins to play. Coins can be inserted at any stage.

4 Move the cursor to the game you want to play on the Submenu screen and press the Start Button (P1-P4) corresponding to the number of players (teams) to begin the game. The buttons are, from left to right: P1 (1 player or team), P2 (2 players or teams), P3 (3 players or teams) and P4 (4 players or teams).
Some games have restrictions on the number of players.

6-3-2 Shortcut Functions

By holding down the Change Button on the Main Menu or the Submenu and pressing the P1-P4 Start Buttons, you can use the shortcut functions.

Change button + P1 Start Button	Shortcut to 01 submenu.
Change button + P2 Start Button	Shortcut to CRICKET submenu.
Change button + P3 Start Button	Shortcut to PRACTICE submenu.
Change button + P4 Start Button	Shortcut to PARTY submenu.
Change button + P1 and P2 Start Buttons	Shortcut to MATCH submenu.
Change button + P3 and P4 Start Buttons	Shortcut to NETWORK PLAY submenu.
Change button + P1 and P3 Start Buttons	Shortcut to RECOMMENDATION submenu.
Change button + P2 and P4 Start Buttons	Shortcut to CARD menu.

6-4 USING IC CARDS

6-4-1 IC Cards

Cards are sold to customers (players) at the shops.

- When an IC card is inserted into the card reader and used with the game, the player's flight information, stats and play results are stored on the server. Various data can be registered and authenticated by linking to other client machines ("machines").
- The various data can be easily accessed by connecting to the "DARTSLIVE" website's members page (via PC, etc.) and entering the access code printed on the back of the IC card.
  NOTE: You can bypass entering the access code every time by bookmarking the member's TOP page.
- By inserting the card into the card reader before the game starts, it will automatically access the database and record the game results and scores.
  Removing the card during the game does not affect the data.

6-4-2 IC CARD SYSTEM OVERVIEW

- The name registered when accessing the server is displayed as "Player Name" on the screen.
- "Player Name" will be displayed when the IC card holder is ranked.
- If no name has been registered, "NO NAME" + the 4-digit access code will be displayed. The access code is printed on the back of the card.
- Scores and other data stored on the server can be accessed and viewed.
- The frequently visiting shop can be registered as the "Home Shop" on the machine. For details, see "8-4-6 Registering Home Shop Using IC Card" below.

NOTE: Stats, flight information and other records are in accordance with the "DARTSLIVE" standards.

6-4-3 IC Card Usage

- Only IC cards sold at the shops can be used.
  The IC cards can be used online with both "DARTSLIVE2" and "TouchLive."
- Insert the card before starting the game. The card will not be read if it is inserted after the game has already started.
- Once the game starts, do not remove the IC card until it ends.
- Depending on the status of the network connection, the game results may not be updated even if the IC card was successfully read. In such cases, the data and information status can not be guaranteed.
- Up to 2 IC cards can be inserted into a single card reader (when playing doubles).
- The IC cards are precision devices. Do not place them near magnets, bend them, get them wet, etc.
- Data that is lost or corrupted cannot be recovered. No guarantees or refunds will be provided.
- Data from a card that has been lost can be transferred to another unused card.
  Visit the member's page at <http://www.dartslive.com/> to perform the "card data transfer" procedures.

SINGLES

Insert the card into the slot at the top of the card reader. There are Four(4) IC CARD slots. Two(2) IC cards can be inserted into each slot and a maximum of 8 cards can be processed simultaneously.

In singles mode, it goes from left to right: P1, P2, P3 and P4. Player names are displayed at the bottom of the screen after the machine reads the IC cards.

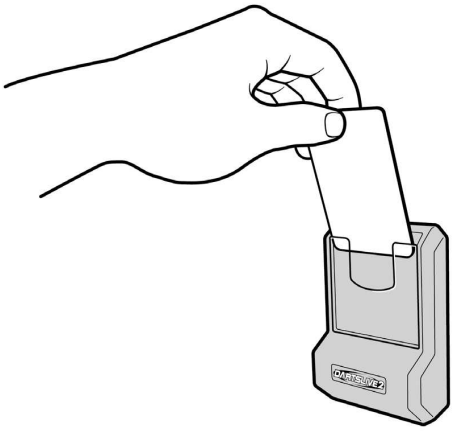

6-4-3 FIG. 01

DOUBLES

Inserting 2 IC cards into the same slot switches the player mode to doubles. Likewise singles mode, player names are displayed at the bottom of the screen.

Insert the IC cards in the correct direction. Data may not be read if inserted incorrectly.

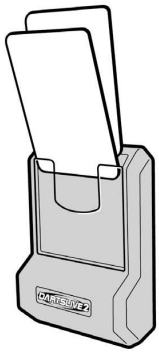

6-4-3 FIG. 02

TRIOS

For trios mode, insert Three(3) IC cards into card reader 1 and 2, and Three(3) IC cards into card reader 3 and 4. Insert the cards in the correct direction. Data may not be read if inserted incorrectly.

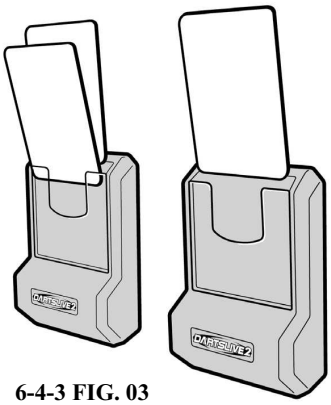

6-4-3 FIG. 03

For gallon mode, insert Four(4) IC cards into card reader 1 and 2, and Four(4) IC cards into card reader 3 and 4.

Insert the cards in the correct direction. Data may not be read if inserted incorrectly.

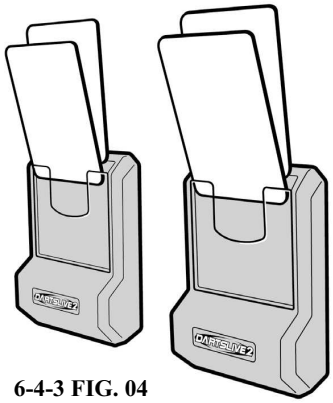

6-4-3 FIG. 04

6-4-4 Removing IC Cards

Pull the IC cards straight up out of the card readers. Not doing so may damage the cards.
Once the game starts, do not pull the cards out until the game ends.

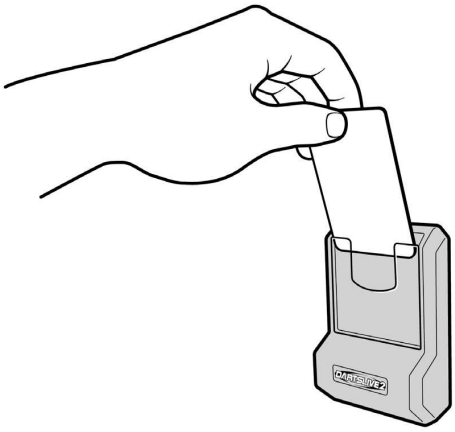

6-4-4 FIG. 01

6-4-5 Checking Data on IC Cards

Insert the IC card and select CARD on the Main Menu to check the data on the card. The data includes the player name, home shop name, stats, ratings, flights and other information stored on the server.

6-4-5 FIG. 01

6-4-6 Registering Home Shop Using IC Card

Select CARD on the Main Menu and press the P3 Button to register the home shop, regardless of the number of cards inserted.

Home Shop Registration:
Use the P3 Button to register the shop where the game is currently being played as the home shop.
The home shop for all cards inserted in card readers 1 to 4 will be changed simultaneously.

6-4-6 FIG. 01

6-4-7 Rating and Flight

After inserting an IC card and playing 01 GAME and STANDARD CRICKET ten or more times, the personal rating and flight information is calculated. The rating is necessary when participating in events, assigning automatic handicaps, etc.

6-5 HELP

Game Explanations

Bring up the option window by placing the cursor over the game name on the submenu and tapping the board. Select the Rule Menu to bring up the Rules screen.

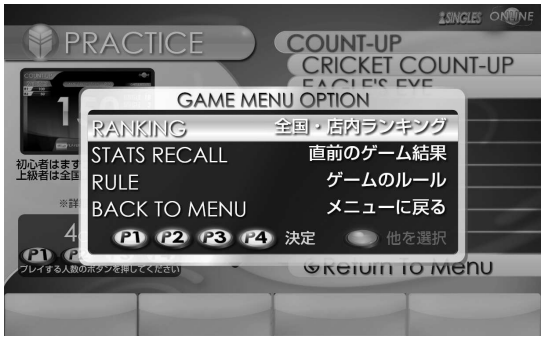

6-5 FIG. 01

6-6 PLAYING OPTION

Press the yellow Button (Start Button) during the game to display the PLAYING OPTION screen for easy access to various game operations.
There are 9 functions under PLAYING OPTION.

SWITCH THE ORDER	Switch between singles and doubles and change throwing order
STAT RECALL	View results and other data from previous game
GAME SETTING	Various game settings
HANDICAP	Set handicap for 01 and CRICKET
REVERSE-A-ROUND	Go back 1 round
MY AWARD	Turn ON or OFF the MY AWARD display.
RULE	View detailed explanation of the game currently being played
BACK TO MENU	End game (if before throwing, credits will not be lost)
RETURN TO GAME	Go back to the game currently being played

● SWITCH THE ORDER

With Zero(0) or One(1) IC card:
Select SWITCH THE ORDER to bring up the window.

チーム内入替 (Switch order within team)	Press the Start Button to switch between singles and doubles mode.
	The P1-P4 Start Buttons correspond to the 4 teams respectively.
チーム順入替 (Switch order of teams)	Press the Start Button to change the order of play.
	The P1-P4 Start Buttons correspond to the 4 teams respectively.

With Two(2) IC Cards:
Insert 2 cards into the card reader and select SWITCH THE ORDER to bring up the window.

チーム内入替 (Switch order within team)	The P1-P4 Start Buttons correspond to the 4 teams respectively. The order of throwing is changed within the team.
チーム順入替 (Switch order of teams)	Press the Start Button to change the order of play.
	The P1-P4 Start Buttons correspond to the 4 teams respectively.

NOTE: This function cannot be used in the trios or gallon mode.

● **STAT RECALL**

Select STAT RECALL to view results and scores from previous games. It can be useful for assigning handicaps or keeping track of tournament results.

● **GAME SETTING**

In GAME SETTING, various options can be set as listed below:
- Adjust "Difficulty Level"
- Increase the variation of game play
- Set different handicaps for each player

HARD MODE	Condition settings for steel-tip darts (double-in, double-out, etc.)	
IN OPTION	Specify the first target to hit in game.	
	DOUBLE	Start by hitting the double segment.
	TRIPLE	Start by hitting the triple segment
	MASTER	Start by hitting either the double or the triple segment
	GRAND MASTER	When starting the game, a single bull is invalid under MASTER rule, and only a double bull counts.
OUT OPTION	Specify the last target to hit in game.	
	DOUBLE	Hit the double segment to check out.
	TRIPLE	Hit the triple segment to check out.
	MASTER	Hit either the double or triple segment to check out.
	GRAND MASTER	A single bull is invalid for the last target under MASTER rule, and only a double bull counts.
BULLSEYE	Set the awarding points for single and double bull. Select OFF, 25 points/50 points or 50 points/50 points.	
SHANGHAI	Check out by hitting the same number in the single, double and triple segment in a single round. (Used only in 01game)	
PARITY PLAY	Continue game until all players finish throwing the same number of round. (Used only in 01 game.)	
CUT THROAT	Points are added to other players. Available for CRICKET when there are 3 or more players. (Used only in CRICKET.)	

6-6 FIG. 01

List of Settings by Game

	01	CRICKET	COUNT UP
HARD MODE	●		
IN OPTION	●		
OUT OPTION	●		
BULLSEYE	●		
SHANGHAI	●		
PARTY PLAY	●		
CUT THROAT		●	

6-6 FIG. 02

● HANDICAP

The number of points and marks can be manually or automatically increased or decreased as a handicap under PLAYING OPTION→HANDICAP. HANDICAP is only available in the 01 and CRICKET games.
All manual settings can only be entered by directly tapping the board.

<How to Set MANUAL HANDICAP>

1 Select PLAYING OPTION→HANDICAP.
Auto and Manual options will be displayed. Select Manual and press the Start Button.

2 Select the player to whom to assign the handicap using one of the Start Buttons from P1 to P4.

3 Place the cursor over ADD or DELETE and tap the desired number on the board to choose the number of points or marks.

<AUTO HANDICAP>

With AUTO HANDICAP, the handicap is assigned based on the rating. Select HANDICAP under PLAYING OPTION to assign handicaps.

How to Set AUTO HANDICAP

1 Press the Start Button before starting the game to bring up the PLAYING OPTION menu. Select AUTO HANDICAP under HANDICAP.

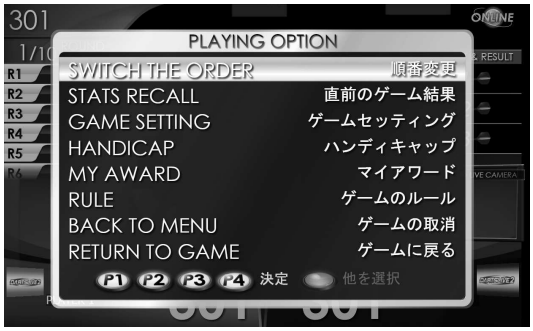

6-6 FIG. 03

2 When the PLAYING OPTION menu is closed, the handicap will be displayed on the game screen.

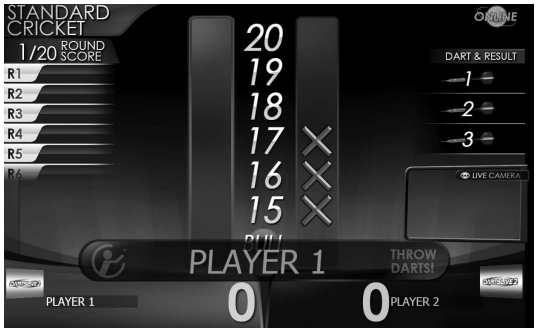

6-6 FIG. 04

● **REVERSE-A-ROUND**
If the Change Button is pressed accidentally, select REVERSE-A-ROUND. The game will go back to the previous round of the player selected.

● **MY AWARD**
The MY AWARD setting allows you to choose whether or not to display MY AWARD for all the players playing the game.

6-7 “DARTSLIVE2” SIMPLE HIERARCHICAL DIAGRAM

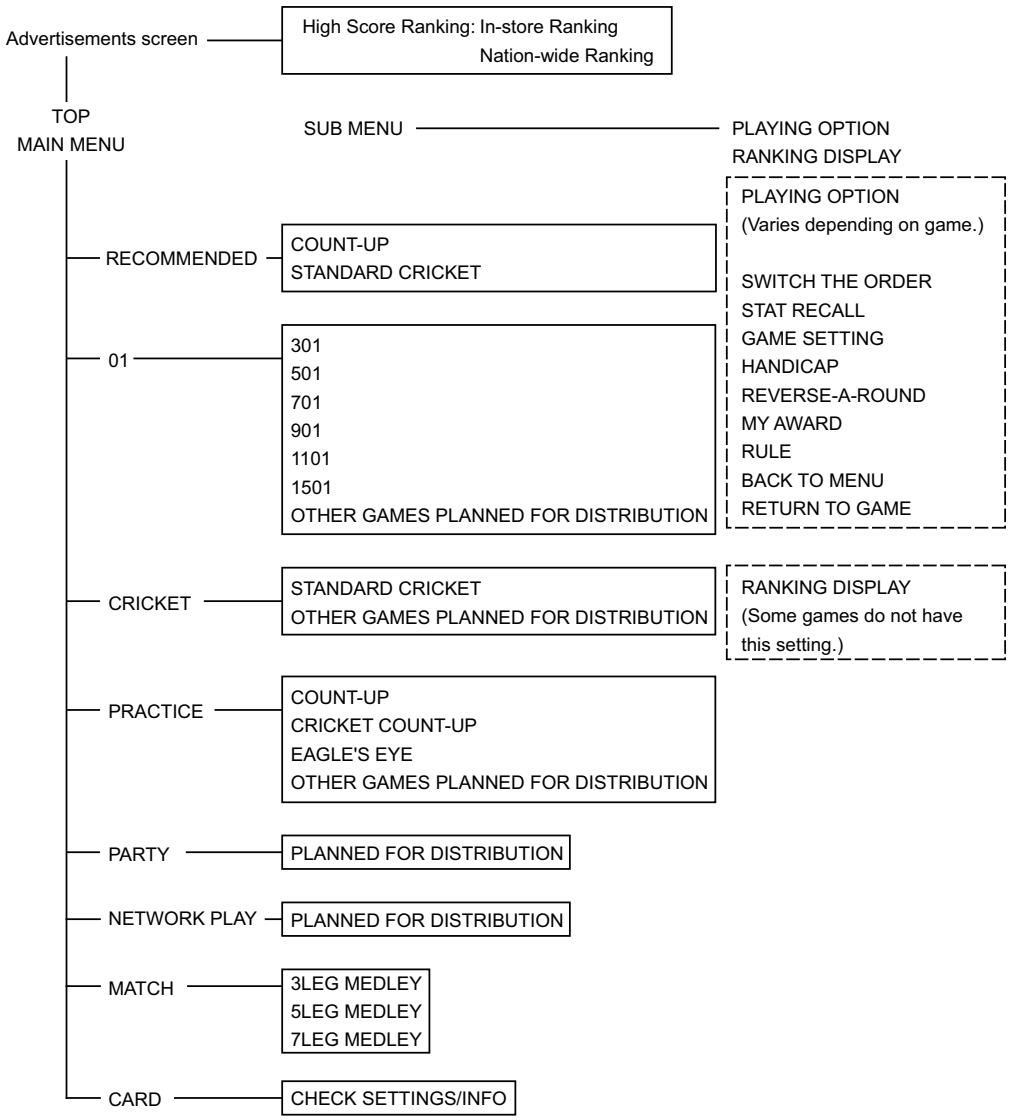

NOTE: New and additional games are planned for distribution.

6-8 GAME RULES

Various new games are added to “DARTSLIVE2.”
New and additional games are available via network distribution.
For detailed contents, rules, information on additional games, etc., visit the following URL:
<http://www.dartslive.com/>

NOTE: The Century Gothic™ font used within the game is the property of Monotype Corporation.
「株式会社モリサワ　新　ゴ M」(New Gothic M from Morisawa & Company Ltd.) is used for Japanese text.

7 PERIODIC INSPECTION

Inspect the following items and perform maintenance regularly to maintain product performance and ensure safe operation.

⚠WARNING

- **Check every 6 month to ensure that power cords are not damaged, the plug is securely inserted, dust has not accumulated between the socket outlet and the power plug, etc. Using the product with accumulated dust can cause fire and electric shock.**
- **Once a year, request the office shown on this manual or the dealer from whom the product was originally purchased to perform the internal cleaning. Using the product with accumulated dust in the interior may cause fire or other accidents. Note that you are liable for the cost of cleaning the interior parts.**
- **There is a danger of accidents involving electrical short circuits or fire caused by factors such as the deterioration of insulation in electrical and electronic equipment over time. Check that there are no abnormalities such as burning smell.**
- **Do not use a water jet, etc. to clean this product. This product is not designed to be cleaned by a water jet. Water could get inside and cause electric shock or short circuits. The product could also be damaged in such a way that it is difficult to repair.**

7 TABLE 01 PERIODIC INSPECTION TABLE (HARDWARE)

ITEMS	DESCRIPTION	PERIOD	REFERENCE
CABINET	Confirm that adjusters contact floor	Daily	—
POWER CORD	Inspection, Cleaning	Every 6 months	As above
MONITOR	Cleaning	As appropriate	—
CABINET SURFACES	Cleaning	As appropriate	Next page

Cleaning the Cabinet Surfaces

When the cabinet surfaces become dirty, remove stains with a soft cloth soaked in water or diluted (with water) chemical detergent and then wrung dry. To avoid damaging the finishing coat, do not use abrasive, bleaching agents, chemical dust-cloth or solvents such as thinner, benzene, etc.
Some general-purpose household, kitchen, and furniture cleaning products may contain strong solvents that degrade plastic parts, coatings, and print. Before using any cleaning product, read the product's cautionary notes carefully and test the product first on a small area that is not highly visible.

8 DESIGN RELATED PARTS

For the warning sticker explanation, refer to chapter 1.

■ CABINET

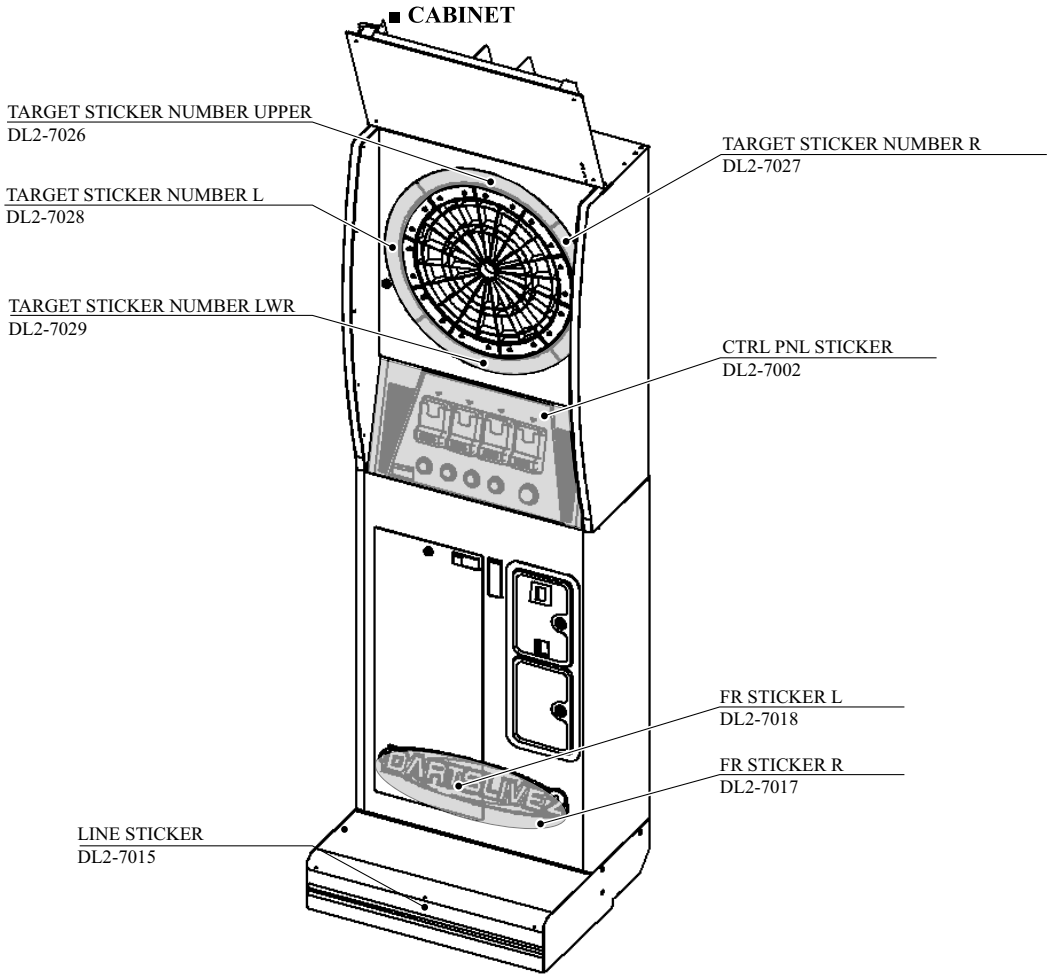

■ THROW LINE STICKER

DL2-7011 DARTSLIVE2 THROW LINE STICKER

This device complies with Industry Canada's licence-exempt RSSs. Operation is subject to the following two conditions:
(1) This device may not cause interference, and
(2) This device must accept any interference, including interference that may cause undesired operation of the device.

This radio transmitter (identify the device by certification number, or model number if Category II) has been approved by Industry Canada to operate with the antenna types listed below with the maximum permissible gain indicated. Antenna types not included in this list, having a gain greater than the maximum gain indicated for that type, are strictly prohibited for use with this device.

Caution: To maintain the compliance with the RF exposure guideline, place the unit at least 20 cm from nearby persons.

DARTSLIVE Co., Ltd.

Ebisu Business Tower 18F, 1-19-19, Ebisu, Shibuya-ku, Tokyo 150-0013, Japan
http://www.dartslive.com/

1ST PRINTING
2010.7

Remark:

We bear the risk of the declaration.
Under the environment with electromagnetic interference such as electrostatic discharge, conductive interference (at power cord and LAN cable), electrical fast transient and surge, the performance of this machine will be degraded and it requires the user to power reset for resuming it to normal operation.

For Singapore, IDA Warning

Complies with IDA Standards N1445-16 and N2727-16

For Taiwan, NCC Warning

注意！

本產品內建的 RFID 模組於無線通訊方面符合台灣的 NCC LP0002之法令規範。

依據 低功率電波輻射性電機管理辦法

第十二條

經型式認證合格之低功率射頻電機，非經許可，公司、商號或使用者均不得擅自變更頻率、加大功率或變更原設計之特性及功能。

第十四條

低功率射頻電機之使用不得影響飛航安全及干擾合法通信；經發現有干擾現象時，應立即停用，並改善至無干擾時方得繼續使用。

前項合法通信，指依電信法規定作業之無線電通信。低功率射頻電機須忍受合法通信或工業、科學及醫療用電波輻射性電機設備之干擾。

使用頻段：13.56MHz 變調方式：ASK 可能產生干擾範圍：約 100mm

可否變更頻率：使用所有頻段 並可迴避「內建無線通訊裝置」及「特定低功耗無線通訊裝置」之干擾。

3rd PRINTING
2018.11

For Canada, RSS and USA, FCC Caution

This device complies with Industry Canada's license-exempt RSSs and Part 15 of the FCC Rules.Operation is subject to the following two conditions: (1) this device may not cause harmful interference, and (2) this device must accept any interference received, including interference that may cause undesired operation.

Warning: Changes or modifications to this unit not expressly approved by the party responsible for compliance could void the user's authority to operate the equipment.

NOTE: This equipment has been tested and found to comply with the limits for a Class B digital device, pursuant to Part 15 of the FCC Rules. These limits are designed to provide reasonable protection against harmful interference in a residential installation. This equipment generates, uses and can radiate radio frequency energy and, if not installed and used in accordance with the instructions, may cause harmful interference to radio communications.

However, there is no guarantee that interference will not occur in a particular installation. If this equipment does cause harmful interference to radio or television reception, which can be determined by turning the equipment off and on, the user is encouraged to try to correct the interference by one or more of the following measures:

- Reorient or relocate the receiving antenna.
- Increase the separation between the equipment and receiver.
- Connect the equipment into an outlet on a circuit different from that to which the receiver is connected.
- Consult the dealer or an experienced radio/TV technician for help.

" FCC RF Radiation Exposure Statement

Caution: To maintain compliance with the FCC's RF exposure guidelines, place the unit at least 20cm from nearby persons."

3rd PRINTING
2018.11