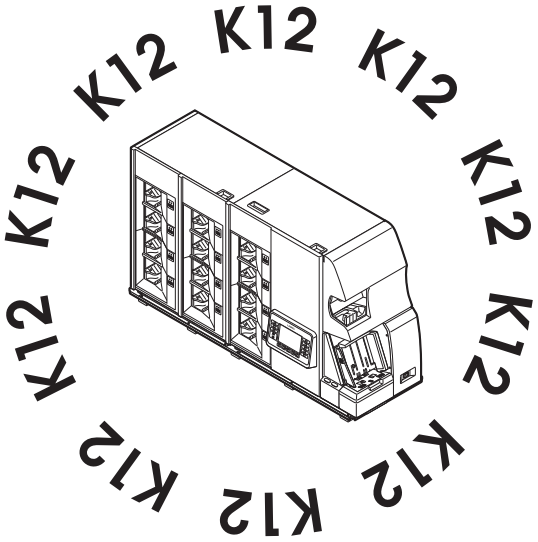

Note Sorter
K12
User Manual

LAUREL

Introduction

Thank you very much for purchasing the "LAUREL K12 note sorter".
This User Manual describes safety instructions, operations, functions, specifications etc.
Please read carefully and understand this manual before operating the machine.
Keep this User Manual handy for ready reference.

Note

1. It is strictly prohibited to use part or this entire manual to other publication without permission of publisher.
2. The contents of this manual and the specification of the product may change without a preliminary notice for future improvement.
3. Please contact a regional distributor of LAUREL, if there are any doubtful points, errors, etc. in this manual.
4. It is understood that LAUREL will not be responsible for any loss caused by use of the product, regardless of any errors in the manual.
5. The illustrations in this manual may differ from the actual product as they are abstract.
6. The display screen illustrated in this manual may differ from an actual display screen.
7. Please contact a regional distributor of LAUREL if the manual has disorderly binding or missing pages.
8. Please contact a regional distributor of LAUREL for loss or damage of the manual.

FCC Caution

Changes or modifications not expressly approved by the party responsible for compliance could void the user's authority to operate the equipment.

FCC Note

This equipment has been tested and found to comply with the limits for a Class A digital device, pursuant to part 15 of the FCC Rules. These limits are designed to provide reasonable protection against harmful interference when the equipment is operated in a commercial environment. This equipment generates, uses, and can radiate radio frequency energy and, if not installed and used in accordance with the instruction manual, may cause harmful interference to radio communications. Operation of this equipment in a residential area is likely to cause harmfulinterference in which case the user will be required to correct the interference at his own expense.

FCC Label in The Machine

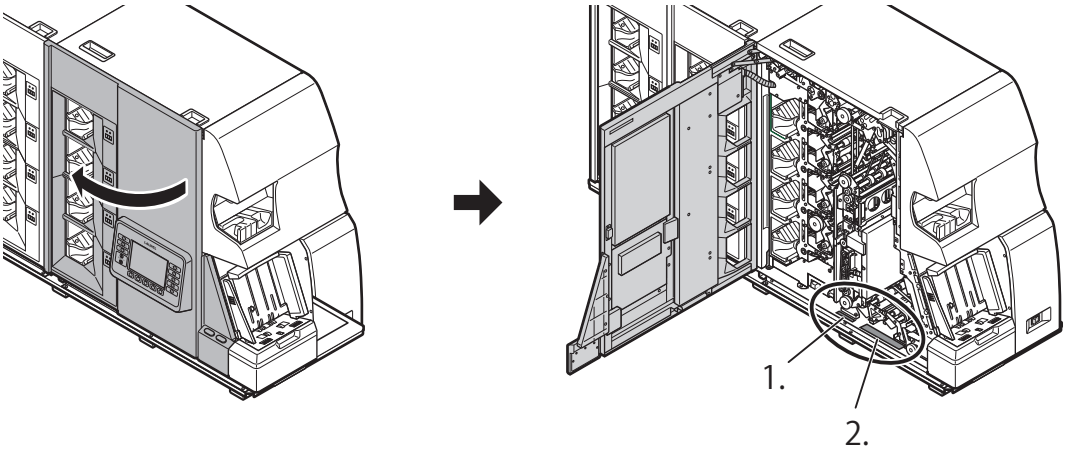

1. FCC ID: 2ARVCK4K8K12

2. This device complies with part 15 of the FCC Rules. Operation is subject to the following two conditions: (1) This device may not cause harmful interference, and (2) this device must accept any interference received, including interference that may cause undesired operation.

Request from us

If you don't use the machine for long, be sure to turn off the power switch.

About the installation of the machine:
Avoid high temperature, high humidity, dust, vibration, and direct sunlight.
In case the environment of operation exceeds room temperature (5˚C to 35˚C) and humidity (35% to 80%), the performance of the machine will deteriorate remarkably.
Please use an air-conditioner, a humidifier, etc. in case of above conditions.

When turning on and off the power switch, make a time interval of 5 seconds or more.

Handle the machine with care.
➢ Do not strike or shake the machine.
➢ Close all doors before start operation.
➢ Press the keys or switches gently for the operation.

Use a modular cable with a ferrite core specified by our company.

Contents

Introduction ii
Note ii
FCC Caution ii
FCC Note iii
FCC Label in The Machine iii
Request from us iv
Safety Caution vii
Description of Warning, Caution and Examples vii
Description of Symbol and Examples vii
Caution Mark in The Machine ix
Description of This Manual x

Chapter 1 OVERALL DESCRIPTIONS 1

Description of Each Part 2
Overall Unit 2
Operation Panel 4
Indication of Pocket Status 5
Description of Display 6
Stand-by Display 6
Count Display 7
Guidance for Cleaning 8
Error Display 9
Description of Sorting Mode and Sorting Pattern 10
About mode of sorting 10
FITNESS Mode 10
ATM Mode 12
SORT Mode 13
FACE/ORIENTATION Modes 14
ISSUE Mode 15

Chapter 2 DESCRIPTION OF OPERATION 17

Starting-up and Closing-down of the Unit 18
Count 19
Setting of Sorting Modes and Sorting Pattern 21
Setting of Preset Number 22

Setting of Fitness Level 24
Setting of CF Level 26
Function Setting 28
Cleaning 33
Periodical Cleaning and Position 33
Cleaning the Dust Tray 1 33
Cleaning the Dust Tray 2 34
Cleaning Sensors 35

Chapter 3 IF AN ERROR OCCUR 39

How to clear an error 40
Error Display 40
Error and Remedial Measure 41
How to remove jam notes 42
Description of Guidance 42
Hopper 42
Reject Pocket 43
Pocket 43
Feed Unit 44
Main Transportation Unit 46
Upper Transportation Unit 49
Pocket Transportation Unit 1 54
Pocket Transportation Unit 2, Pocket Transportation Unit 3 58

Chapter 4 INSTALLATION, SPECIFICATIONS AND OTHERS 63

Installation 64
Condition of installation 64
Installation and Transfer 64
Specifications 65
Accessories 66

Safety Caution

- This manual is used to follow symbols to make you cautious in order to use the machine safely and to prevent you from a risk of an injury or from losing your property.
- It describes contents of danger and/or how to prevent the danger together with marking which indicates contents of the danger near the symbols.
- Please read through this manual to understand the meanings of symbols and markings before use.

Description of Warning, Caution and Examples

Warning	In case the machine is wrongly operated without respect to this icon, there is a possibility of fatal or serious injury to the operator.
Caution	In case the machine is wrongly operated without respect to this icon, there is a possibility of injury or material physical damage to the machine.

Description of Symbol and Examples

Risk of Injury	This symbol warns the operator to be cautious not to pinch a finger etc. In case of handling without care, there is a risk of injury.
Risk of Fire	This symbol warns possibility of fire and smoke.
Don't disassemble	This symbol warns the operator not to disassemble the machine. There is a risk of danger.
Pull out Plug	This mark requires that the power plug be removed before taking necessary action.
	This mark indicates an action must be carried out.

Warning	
Pull out Plug	If smoking, abnormal smell, noise is detected from the machine, stop the operation and pull out the plugs from outlet. Then contact A regional distributor of LAUREL. Without respect to this caution, there is risk of failure, an electric shock or a fire.
Pull out Plug	If a liquid is spilled over the machine or metal, burnable material are dropped inside of the machine, do not use the machine. Pull out the plug from outlet and contact a regional distributor of LAUREL. Otherwise, there is a risk of an electric shock or a fire.

Caution	
Risk of Fire	Do not install the machine at a moist area, dusty or any place for handling water. There is a risk of an electrical shocks and a fire.
Risk of Fire	Do not use the power cable which is not for the machine.There is a risk of failure, an electric shock or a fire.
Risk of Fire	The power cable enclosed in the box is exclusive for the machine. Use the cable for the machine. Otherwise there is a risk of failure, an electric shock or a fire.
	Make sure the machine has stopped completely before accessing inside the machine.Otherwise, there is a risk of an injury.
Risk of Injury	Hold the specified part when opening and closing doors and be sure not to pinch your finger. Otherwise, there is a risk of an injury.
Don't disassemble	Do not disassemble the machine except having been instructed in the user manual. There is a risk of an electric shock and a fire.

Caution Mark in The Machine

- The safety caution label is attached to the place which is hazardous area in the machine. These labels are for always making an operator conscious of the danger while operating the machine.
- If the caution label is unreadable due to not attached, peeling off and/or stain, please contact a regional distributor of LAUREL.

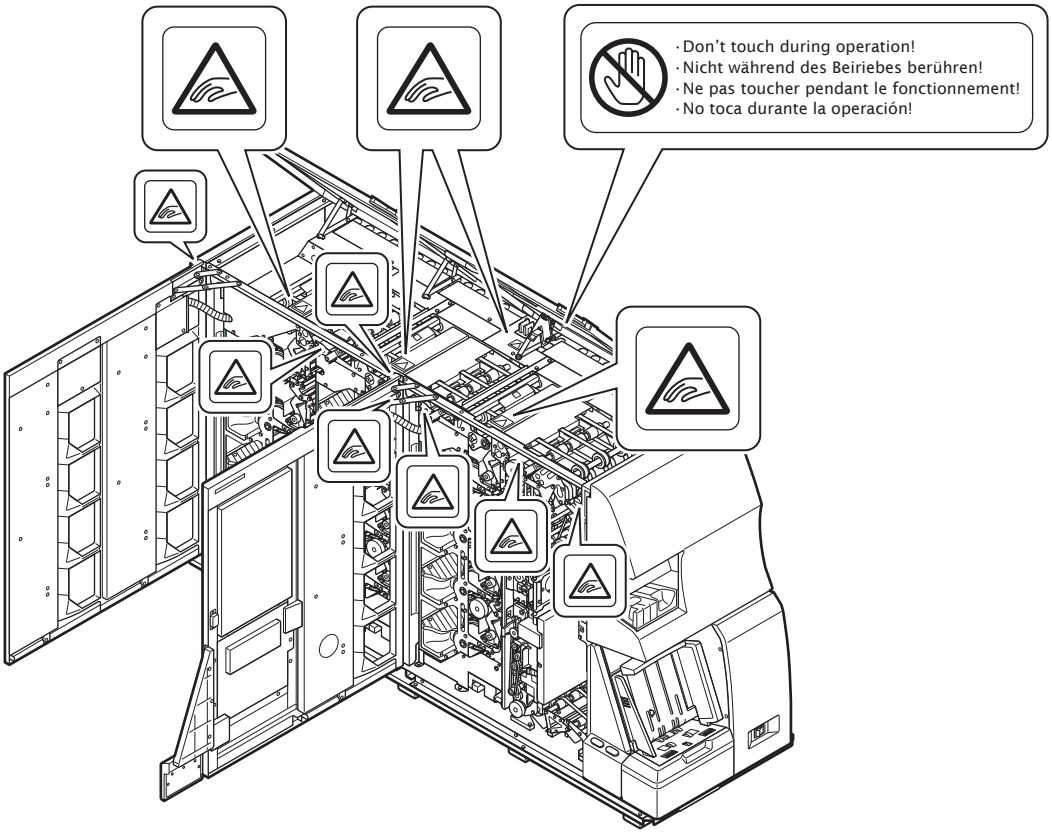

Description of This Manual

STEP-1
It describes operation procedure.

Point
It describes important points for operation.

➢
Supplemental remarks about operation.

Miscalculation
It describes miscalculation.

Count

STEP-1 **Align the notes and put the notes onto the Hopper.**

➢ The count starts automatically.

➢ If the count does not start automatically, press START/STOP Switch to start count.

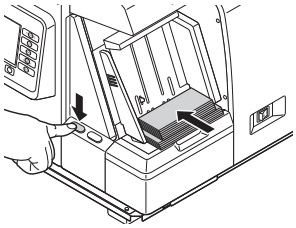

Point

♦ It is possible to check the detailed count results or reject reasons by changing display indication. Please refer to Count Display Page 32.

➢ When the pocket becomes full, the count stops once even if notes remain on the Hopper. The count will start after removing notes at the pocket.

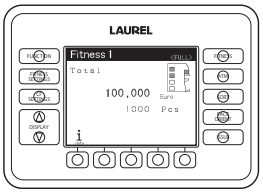

Miscalculation

♦ **The count result is accumulated to the present transaction. Therefore be sure not to recount the notes which are taken out form the pocket.**

STEP-2 **When completing the transaction after the count, be sure no note on the Hopper and press START/STOP switch.**

➢ When START/STOP switch is pressed without note at the Hopper, the count result on the display is cleared.

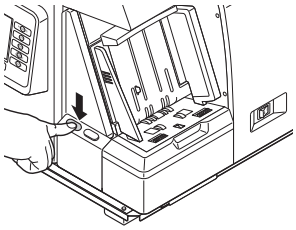

Chapter 1 OVERALL DESCRIPTIONS

Description of Each Part

Overall Unit

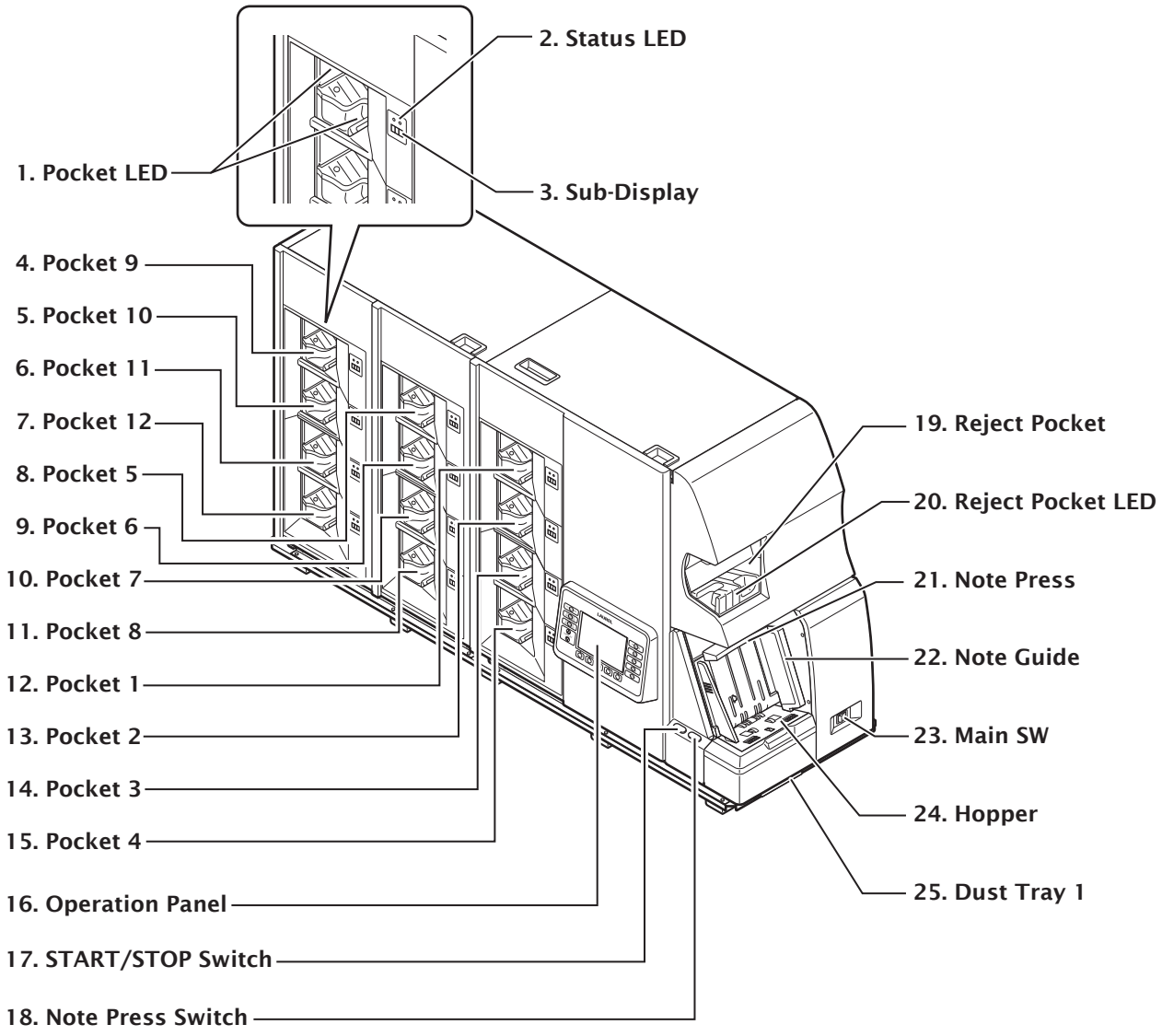

Overall Unit (Continued)

1. **Pocket LED** ..... indicates status of pocket by lighting or blinking. Please refer to Indication of Pocket Status Page 5.
2. **Status LED** ..... indicates a category of note at the Pocket. Please refer to Indication of Pocket Status Page 5.
3. **Sub-Display** ..... indicates quantity of notes at the Pocket.
4. **Pocket 9**..... stacks the notes to be sorted out. (Max. 200 pcs.)
5. **Pocket 10** ..... stacks the notes to be sorted out. (Max. 200 pcs.)
6. **Pocket 11** ..... stacks the notes to be sorted out. (Max. 200 pcs.)
7. **Pocket 12** ..... stacks the notes to be sorted out. (Max. 200 pcs.)
8. **Pocket 5**..... stacks the notes to be sorted out. (Max. 200 pcs.)
9. **Pocket 6**..... stacks the notes to be sorted out. (Max. 200 pcs.)
10. **Pocket 7**..... stacks the notes to be sorted out. (Max. 200 pcs.)
11. **Pocket 8**..... stacks the notes to be sorted out. (Max. 200 pcs.)
12. **Pocket 1**..... stacks the notes to be sorted out. (Max. 200 pcs.)
13. **Pocket 2**..... stacks the notes to be sorted out. (Max. 200 pcs.)
14. **Pocket 3**..... stacks the notes to be sorted out. (Max. 200 pcs.)
15. **Pocket 4**..... stacks the notes to be sorted out. (Max. 200 pcs.)
16. **Operation Panel** ..... indicates count result at Main-Display and there are various operation keys. Please refer to Operation Panel Page 4.
17. **START/STOP Switch**..... to start, stop the count and complete transaction. Pressing this Switch during counting makes the machine stop counting.Pressing this Switch during stand-by makes the machine start counting.Pressing this Switch after counting with no notes on the Hopper makes the machine complete transaction.
18. **Note Press Switch** ..... to move up and down the Note Press.
19. **Reject Pocket**..... stacks unreadable or untransportable notes.
20. **Reject Pocket LED** ..... lights up when notes are rejected into the Reject Pocket. blinks when the Reject Pocket is full.
21. **Note Press**..... holds notes on Hopper during counting. automatically goes down when accumulated notes reach the specified height.
22. **Note Guide** ..... to arrange notes position on the Hopper.
23. **Main SW**..... to turn on or off the power of the Unit.
24. **Hopper** ..... to put notes to be counted. (Max 500 pcs.)
25. **Dust Tray 1** ..... to collect dust.

Operation Panel

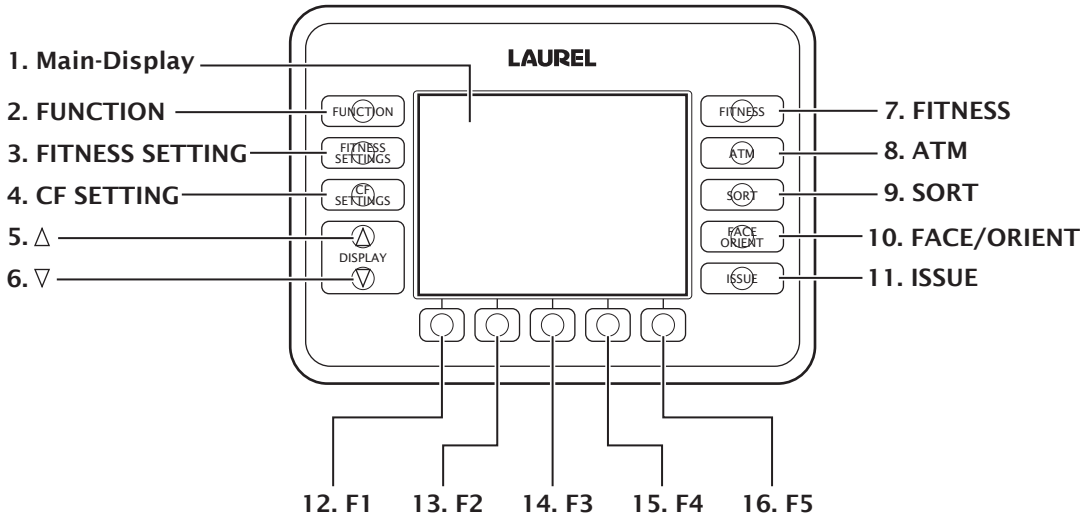

1. **Main-Display** ..... indicates count results in Value, Quantity or Mode settings. indicates the error code in case of an error.
2. **FUNCTION** ..... to set Buzzer sound and Contrast of display.
3. **FITNESS SETTING** ..... to set Fitness Sorting Level.
4. **CF SETTING** ..... to set of CF Level.
5. △ ..... to turn the pages or move the cursor.
6. ▽ ..... to turn the pages or move the cursor.
7. **FITNESS** ..... to set FITNESS Mode.
8. **ATM** ..... to set ATM Mode.
9. **SORT** ..... to set Denomination Sort Mode.
10. **FACE/ORIENT** ..... to set FACE Mode or ORIENTATION Mode.
11. **ISSUE** ..... to set ISSUE Mode to sort out old and new issue.
12. **F1** ..... to activate the function corresponding to the icon on the Main-Display above F1 key.
13. **F2** ..... to activate the function corresponding to the icon on the Main-Display above F2 key.
14. **F3** ..... to activate the function corresponding to the icon on the Main-Display above F3 key.
15. **F4** ..... to activate the function corresponding to the icon on the Main-Display above F4 key.
16. **F5** ..... to activate the function corresponding to the icon on the Main-Display above F5 key.

Indication of Pocket Status

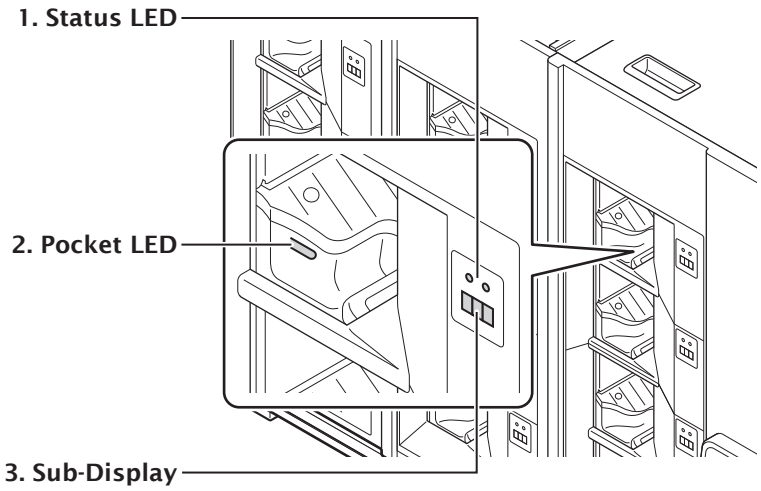

1. Status LED ..... LED indicates note category by color of light.

LED / Sorting Mode	Blue	Green	Orange	Red
FITNESS	Fit		Unfit	CF
ATM	ATM	Fit	Unfit	CF
SORT (Denom.)	Single	Mixed		CF
FACE	Fit			CF
ORIENT	Fit			CF
ISSUE (Old/New)	New	Old	2 generation old	CF

2. Pocket LED ..... guides operators to remove notes. When it is ready for removing them, LED lights on after blinking 2 seconds.

3. Sub-Display ..... indicates a count result of the Pocket.
When the pocket gets full, Pocket Count Display blinks slowly to guide you to remove notes. In case the notes are removed from the pocket irregularly, the Display blinks quickly.

Description of Display

Stand-by Display

- Stand-by Display indicates present sorting mode, preset number and target currency.
- While showing Stand-by Display, the count starts by pressing START/STOP SW.

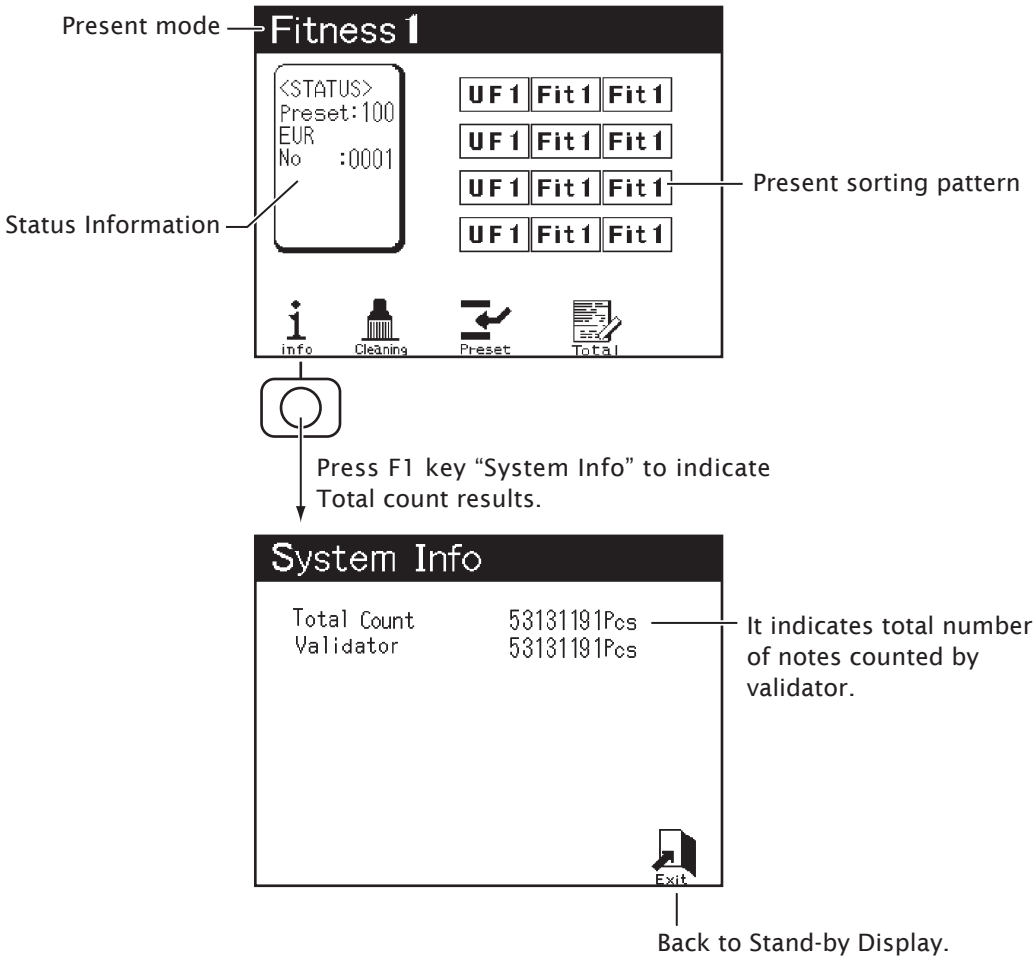

Count Display

♦ When counting starts, the display turns from Stand-by Display to Count Display and count result will be shown.

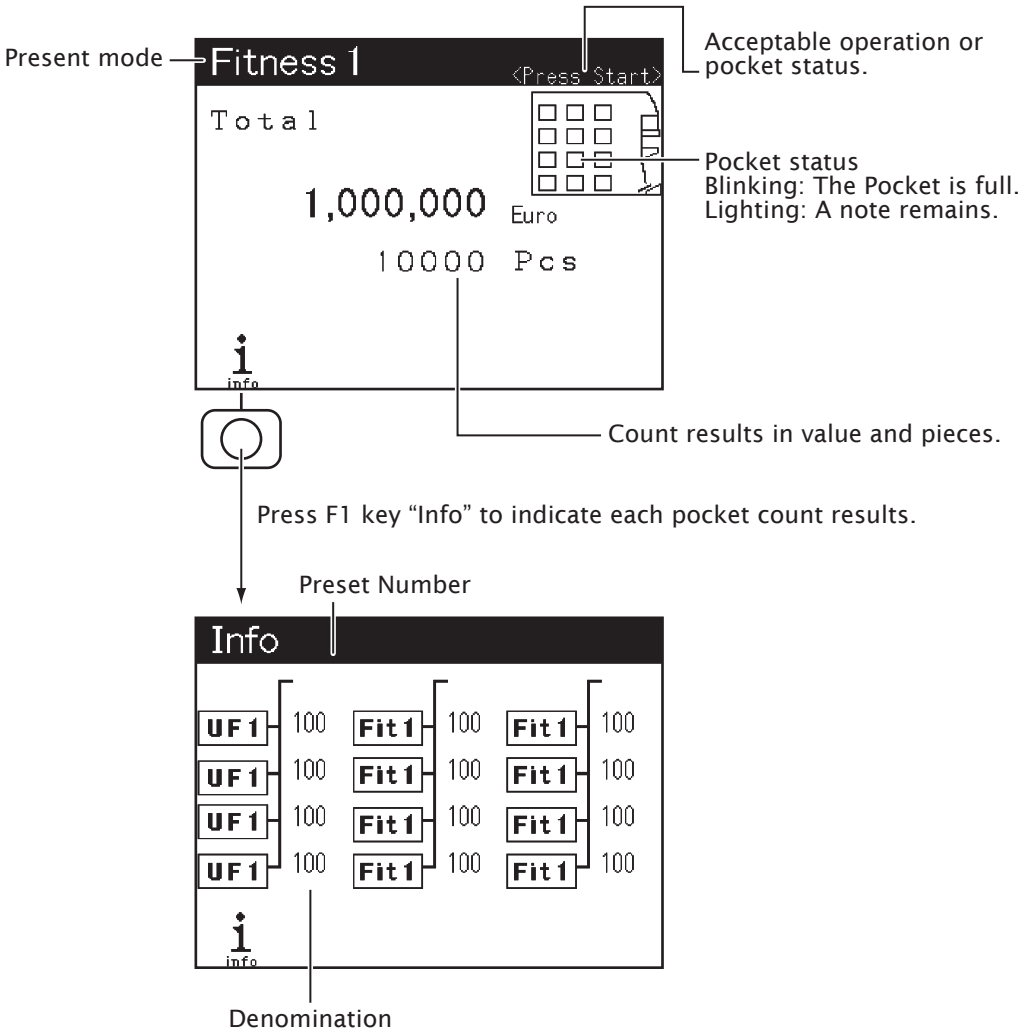

Guidance for Cleaning

♦ When the cleaning is required, the display indicates Cleaning Guidance on the display after turning on the power. If the Cleaning Guidance is indicated, clean the dust trays. Refer to Cleaning Page 33 for further details about cleaning.

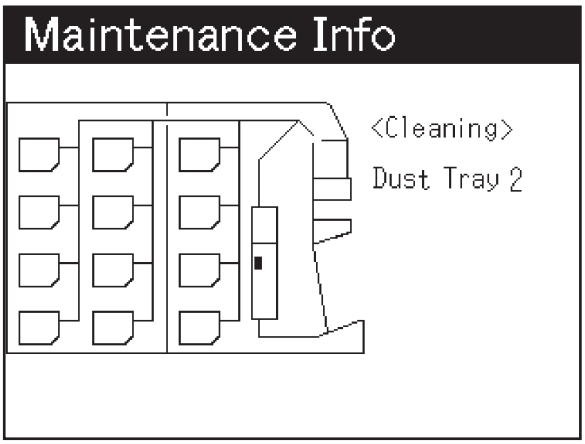

Error Display

- If a note jam occurs, the display switches Error Display and the display indicates error code and error location by graphic guidance.
- Refer to How to clear an error Page 40 and clear the error.

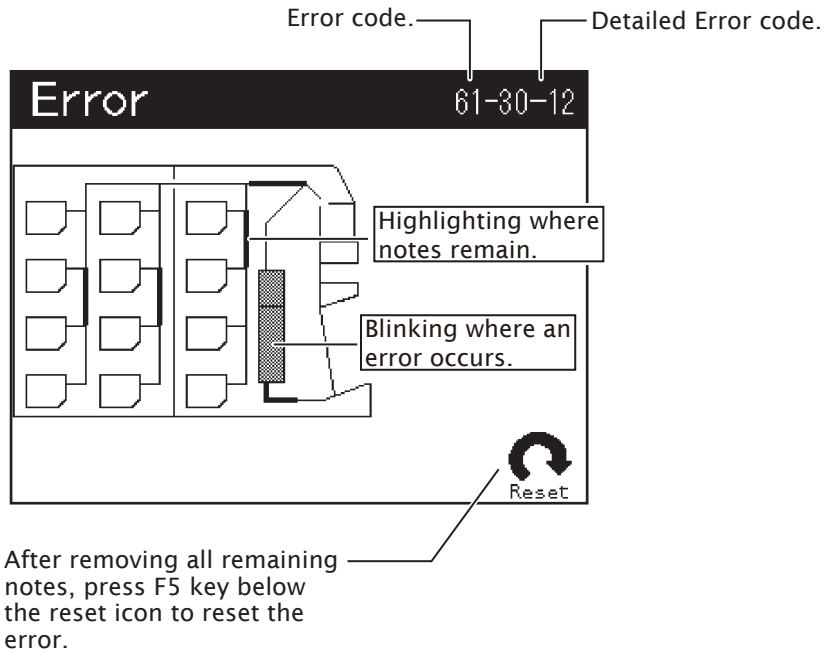

Description of Sorting Mode and Sorting Pattern

About mode of sorting

♦ Following modes are available.

1) FITNESS Mode.....Sorting out fit and unfit notes.
2) ATM Mode .....Sorting out ATM-fit notes.
3) SORT Mode.....Sorting out denominations.
4) FACE/ORIENTATION Mode.....Sorting out facing or orientation of notes.
5) ISSUE Mode.....Sorting out new and old issue of notes by each generation.

FITNESS Mode

♦ Press FITNESS key to activate FITNESS Mode and display indicates sorting pattern for each pocket.

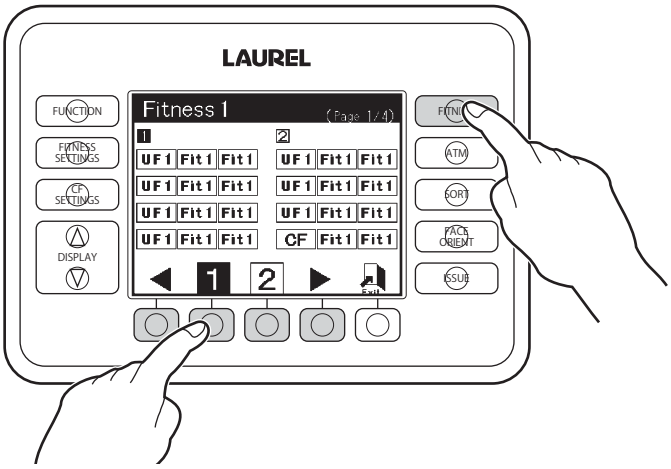

FITNESS Mode (Continued)

♦ Press F1 or F4 key to select the display screen. Press F2 or F3 key to set sorting pattern. The contents of sorting patterns are following.

Sorting Pattern / Pocket	1	2	3	4	5	6	7
Pocket 1	Fit	Fit	Fit(Face)	Fit(Face)	Fit1	Fit1	Fit(A)
Pocket 2	Fit	Fit	Fit(Face)	Fit(Face)	Fit1	Fit2	Fit(B)
Pocket 3	Fit	Fit	Fit(Unface)	Fit(Unface)	Fit2	Fit3	Fit(C)
Pocket 4	Fit	Fit	Fit(Unface)	Fit(Unface)	Fit2	Fit4	Fit(D)
Pocket 5	Fit	Fit	Fit(Face)	Fit(Face)	Fit1	Fit1	Fit(A)
Pocket 6	Fit	Fit	Fit(Face)	Fit(Face)	Fit1	Fit2	Fit(B)
Pocket 7	Fit	Fit	Fit(Unface)	Fit(Unface)	Fit2	Fit3	Fit(C)
Pocket 8	Fit	Fit	Fit(Unface)	Fit(Unface)	Fit2	Fit4	Fit(D)
Pocket 9	Unfit	Unfit	Unfit(Face)	Unfit(Face)	Unfit1	Unfit1	Unfit(A)
Pocket 10	Unfit	Unfit	Unfit(Face)	Unfit(Face)	Unfit1	Unfit2	Unfit(B)
Pocket 11	Unfit	Unfit	Unfit(Unface)	Unfit(Unface)	Unfit2	Unfit3	Unfit(C)
Pocket 12	Unfit	CF	Unfit(Unface)	CF	Unfit2	Unfit4	Unfit(D)

Point

♦ There are various setting for notes sorting. Please contact your local distributor for further details.

ATM Mode

♦ Press ATM key to activate ATM Mode and display indicates sorting pattern for each pocket.

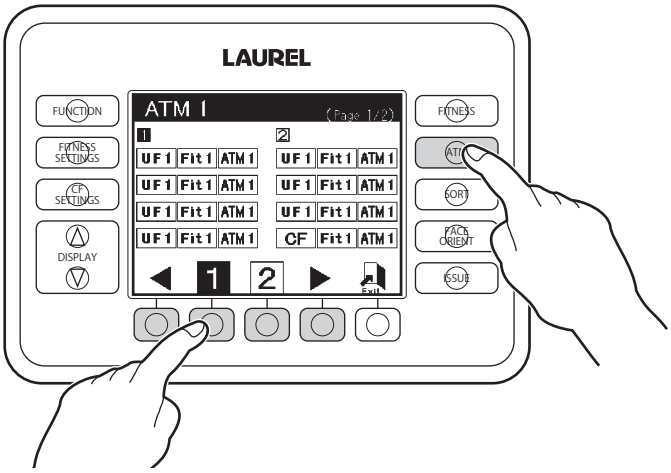

♦ Press F1 or F4 key to select the display screen. Press F2 or F3 key to set sorting pattern. The contents of sorting patterns are following.

Sorting Pattern Pocket	1	2	3	4
Pocket 1	ATM	ATM	ATM(Face)	ATM(Face)
Pocket 2	ATM	ATM	ATM(Face)	ATM(Face)
Pocket 3	ATM	ATM	ATM(Unface)	ATM(Unface)
Pocket 4	ATM	ATM	ATM(Unface)	ATM(Unface)
Pocket 5	Fit	Fit	Fit(Face)	Fit(Face)
Pocket 6	Fit	Fit	Fit(Face)	Fit(Face)
Pocket 7	Fit	Fit	Fit(Unface)	Fit(Unface)
Pocket 8	Fit	Fit	Fit(Unface)	Fit(Unface)
Pocket 9	Unfit	Unfit	Unfit(Face)	Unfit(Face)
Pocket10	Unfit	Unfit	Unfit(Face)	Unfit(Face)
Pocket11	Unfit	Unfit	Unfit(Unface)	Unfit(Unface)
Pocket 12	Unfit	CF	Unfit(Unface)	CF

Point

♦ There are various setting for notes sorting. Please contact your local distributor for further details.

SORT Mode

♦ Press SORT key to activate SORT Mode and display indicates sorting pattern for each pocket.

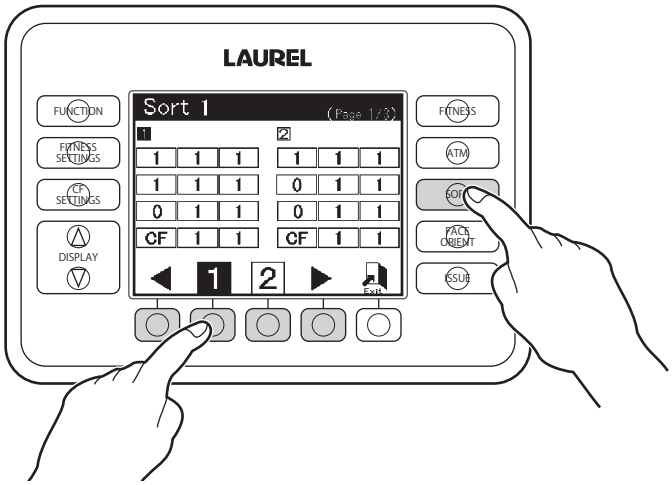

♦ Press F1 or F4 key to select the display screen. Press F2 or F3 key to set sorting pattern. The contents of sorting patterns are following.

Sorting Pattern / Pocket	1	2	3	4	5	6
Pocket 1	1	1	1	1	Other	1
Pocket 2	1	1	2	2	Other	2
Pocket 3	1	1	3	3	Other	3
Pocket 4	1	1	4	4	Other	Other
Pocket 5	1	1	1	1	Other	1
Pocket 6	1	1	2	2	Other	2
Pocket 7	1	1	3	3	Other	3
Pocket 8	1	1	4	4	Other	Other
Pocket 9	1	1	5	5	Other	1
Pocket 10	1	Other	6	6	Other	2
Pocket 11	Other	Other	7	Other	Other	3
Pocket 12	CF	CF	Other	CF	Other	Other

♦ 1=First denomination to be counted.
2=Second denomination to be counted.
3=Third denomination to be counted.
⋮
7=7th denomination to be counted.

Point

♦ There are various setting for notes sorting. Please contact your local distributor for further details.

FACE/ORIENTATION Modes

♦ Press FACE/ORIENT key to activate FACE/ORIENTATION Mode and display indicates sorting pattern for each pocket.

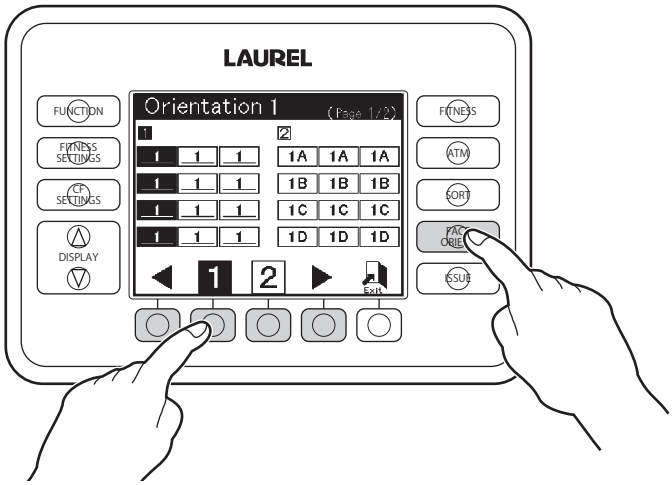

♦ Press F1 or F4 key to select the display screen. Press F2 or F3 key to set sorting pattern. The contents of sorting patterns are following.

Sorting Pattern Pocket	1	2	3	4
Pocket 1	Fit	1st denom. (A)	Mix (A)	1st denom. (A)
Pocket 2	Fit	1st denom. (B)	Mix (B)	2nd denom.(A)
Pocket 3	Fit	1st denom. (C)	Mix (C)	3rd denom.(A)
Pocket 4	Fit	1st denom. (D)	Mix (D)	4th denom.(A)
Pocket 5	Fit	1st denom. (A)	Mix (A)	1st denom. (A)
Pocket 6	Fit	1st denom. (B)	Mix (B)	2nd denom.(A)
Pocket 7	Fit	1st denom. (C)	Mix (C)	3rd denom.(A)
Pocket 8	Fit	1st denom. (D)	Mix (D)	4th denom.(A)
Pocket 9	Unfit	1st denom. (A)	Mix (A)	5th denom.(A)
Pocket 10	Unfit	1st denom. (B)	Mix (B)	6th denom.(A)
Pocket 11	Unfit	1st denom. (C)	Mix (C)	7th denom.(A)
Pocket 12	Unfit	1st denom. (D)	Mix (D)	8th denom.(A)

♦ The 1st to 8th denom. means the order of denomination which was assigned the pocket automatically.

Point

♦ There are various setting for notes sorting. Please contact your local distributor for further details.

ISSUE Mode

♦ Press ISSUE key to activate ISSUE Mode and display indicates sorting pattern for each pocket.

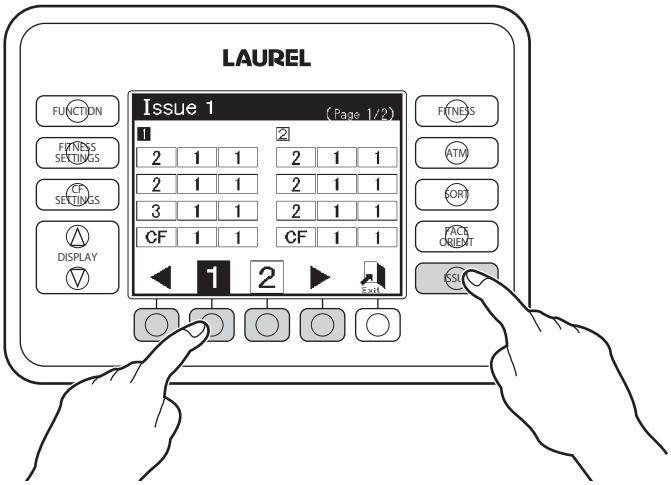

♦ The machine sorts out the notes corresponding to old or new issue and the first issue type goes to Issue1 pocket and second issue type goes to Issue2 pocket in order.

Sorting Pattern Pocket	1	2	3	4
Pocket 1	Issue1	Issue1	Issue1	Issue1
Pocket 2	Issue1	Issue1	Issue1	Issue1
Pocket 3	Issue1	Issue1	Issue1	Issue1
Pocket 4	Issue11	Issue1	Issue1	Issue1
Pocket 5	Issue1	Issue1	Issue1	Issue1
Pocket 6	Issue1	Issue1	Issue1	Issue1
Pocket 7	Issue1	Issue1	Issue2	Issue1
Pocket 8	Issue1	Issue1	Issue2	Issue1
Pocket 9	Issue2	Issue2	Issue3	Issue2
Pocket 10	Issue2	Issue2	Issue3	Issue2
Pocket 11	Issue3	Issue2	Issue3	Issue2
Pocket 12	CF	CF	CF	Issue3

♦ The machine sorts out the notes corresponding to old or new issue and the first issue type goes to Issue1 pocket and second issue type goes to Issue2 pocket in order.

Point

♦ There are various setting for notes sorting. Please contact your local distributor for further details.

Chapter 2 DESCRIPTION OF OPERATION

Starting-up and Closing-down of the Unit

- The unit starts up by turning on Main SW. Turn OFF Main SW when closing the Unit.
- The self-check function activates when the power is on. When no error is found in self-check, the stand-by display is indicated and gets ready for counting.

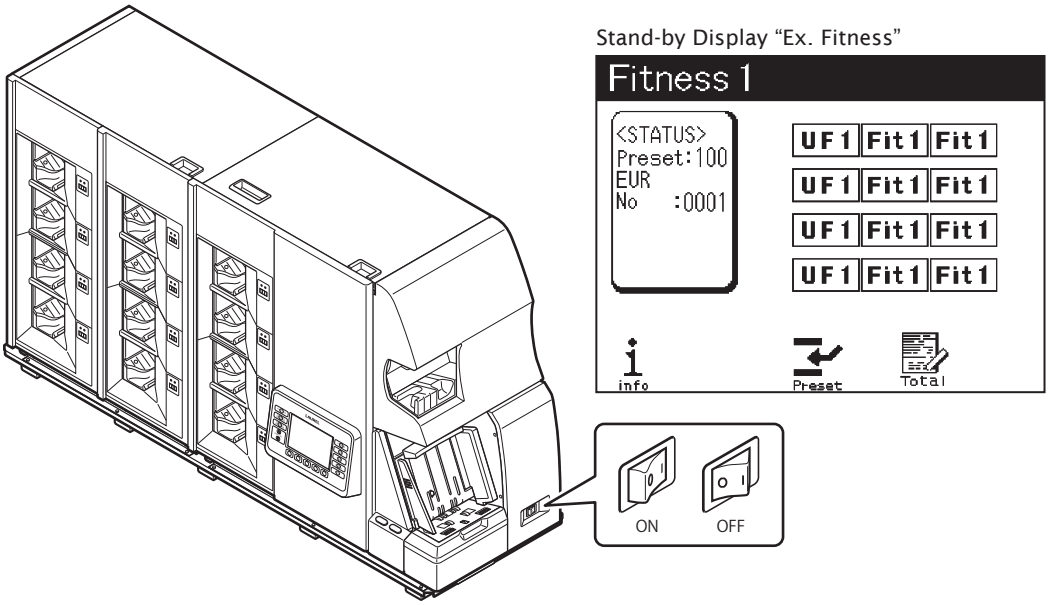

- If an error is found in self-check, Error Display is indicated. Clear the error according to the error showing on the display. Refer to How to clear an error Page 40.

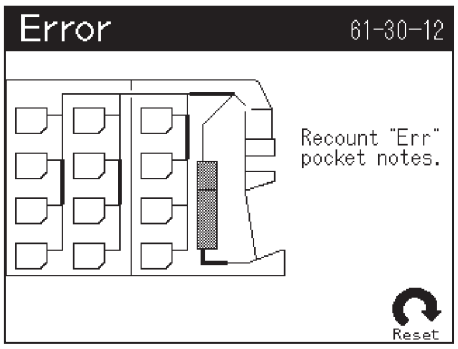

- If the dust tray cleaning is required, Maintenance Info Display is indicated after turning on the power. Clean the dust trays according the information showing on the display. Without cleaning dust trays, the display does not show Stand-by Display. Refer to Cleaning Page 33.

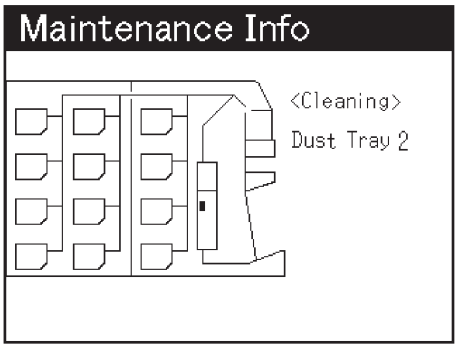

Count

STEP-1 **If necessary change Sorting Mode or Sorting Pattern.**

Refer to Setting of Sorting Modes and Sorting Pattern Page 10 for further details.

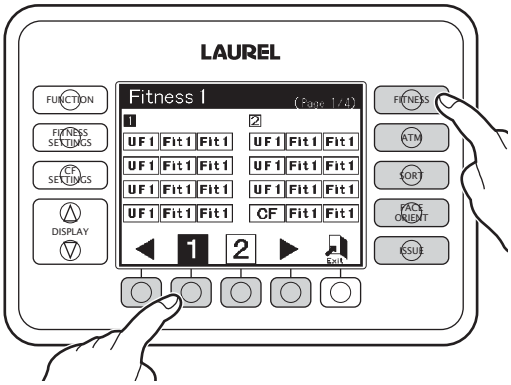

STEP-2 **If necessary, change a preset number.**

Refer to Setting of Preset Number Page 22.

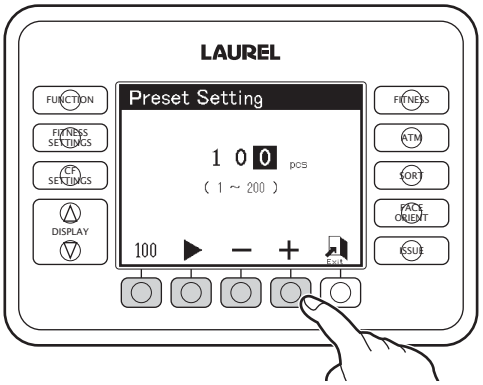

STEP-3 **Adjust Note Guide to size of note.**

➢ Move Note Guide by holding rib part.

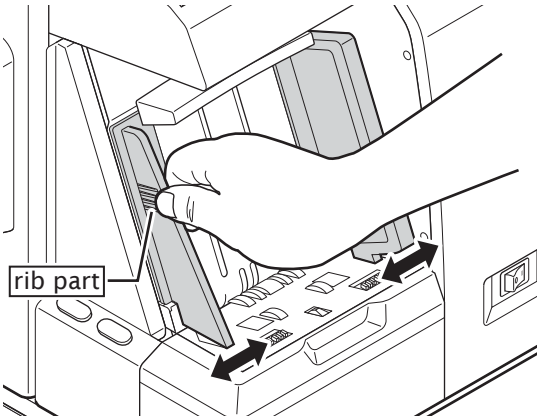

Count (Continued)

STEP-4 **Align the notes and put the notes onto the Hopper.**

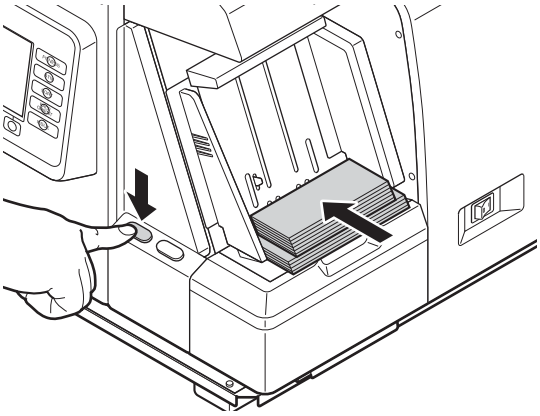

➢ The count starts automatically.

➢ If the count does not start automatically, press START/STOP Switch to start count.

➢ It is possible to put additional notes to the Hopper.

➢ When the count starts, Main-Display indicates count result in value or quantity.

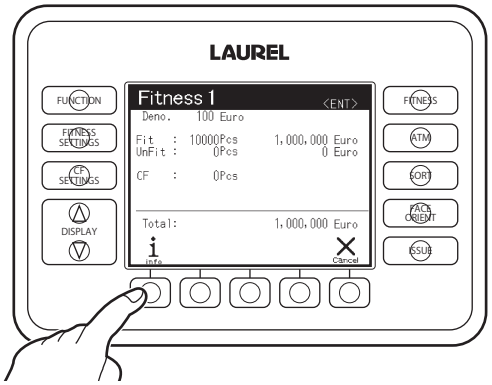

Point

♦ It is possible to check the detailed count results or reject reasons by changing display indication. Please refer to Count Display Page 7.

➢ When the pocket becomes full, the count stops once even if notes remain on the Hopper. The count will start after removing notes at the pocket.

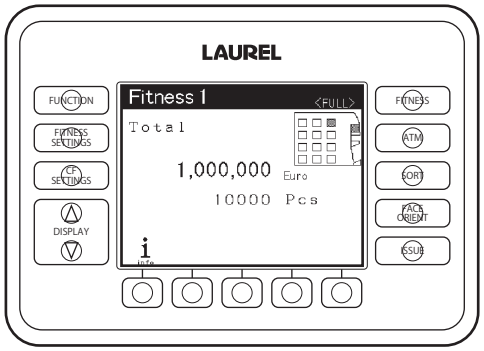

Miscalculation

♦ **The count result is accumulated to the present transaction. Therefore be sure not to recount the notes which are taken out form the pocket.**

STEP-5 **When completing the transaction after the count, be sure no note on the Hopper and press START/STOP switch.**

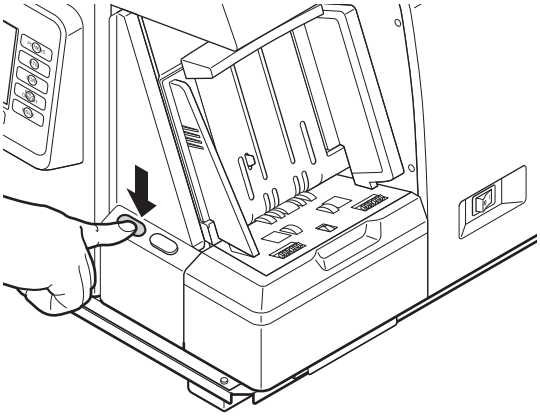

➢ When START/STOP switch is pressed without note at the Hopper, the count result on the display is cleared.

Setting of Sorting Modes and Sorting Pattern

STEP-1 **Press sorting key to set a Sorting Mode.**

Ex. Fitness

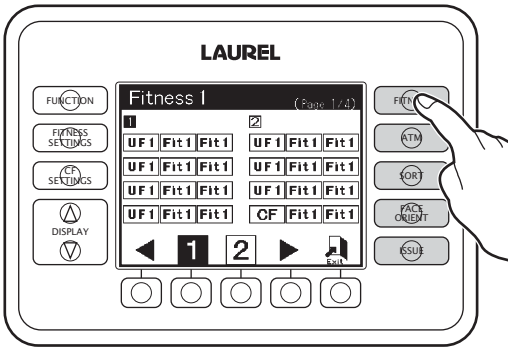

STEP-2 **Press F1 or F4 key to select the display screen. Press F2 or F3 key to set sorting pattern.**

➢ The selected sorting pattern's number inverts.

Ex. Fitness

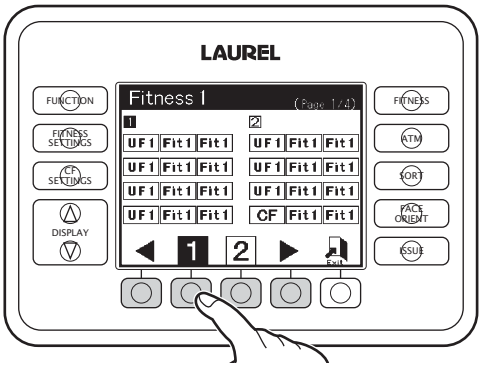

STEP-3 **Press F5 key to return to Stand-by Display.**

Ex. Fitness

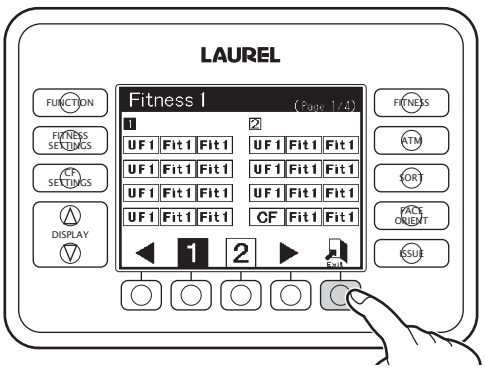

Setting of Preset Number

STEP-1 **If the display indicates sorting pattern, press F5 key "Exit" to return to Stand-by Display.**

Ex. Fitness

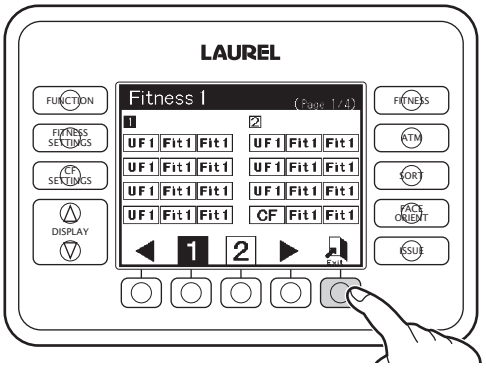

STEP-2 **Press F3 key "Preset".**

➢ Preset Setting display is indicated.

Ex. Fitness

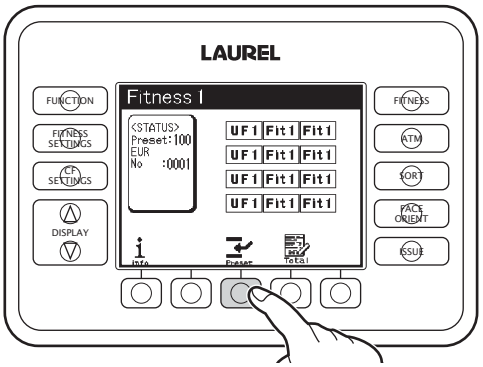

STEP-3 **Set the preset number.**

1. Press F2 to move the cursor to desired digit.
2. Change the value by F3 key "-" or F4 key "+".

➢ Press F1 key "100" to set 100.

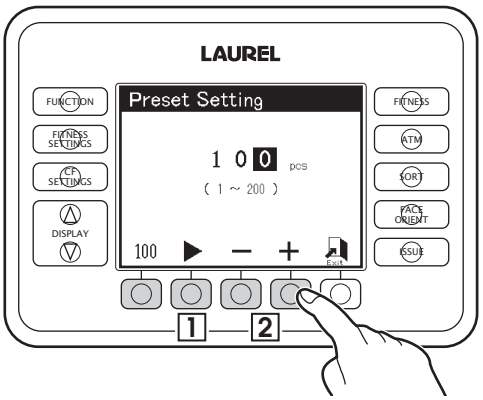

Setting of Preset Number (Continued)

STEP-4 **Press F5 key "Exit" to return to Stand-by Display after saving the preset number.**

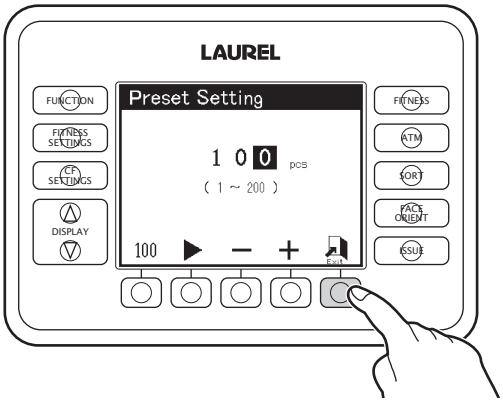

Setting of Fitness Level

STEP-1 **Press FITNESS SETTING key while the display is showing Stand-by Display.**

➢ The display indicates Fitness Setting Display.

➢ If Admin Mode is activated, the password is required.

Ex. Fitness

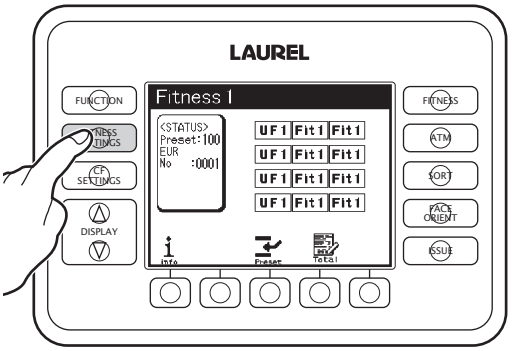

How to input the password.

1. Press F1 key or F2 key to select the number.
2. Press F3 key "ENT" to set the number in order.

➢ If the password is identical, the display indicates Fitness Setting Display.

F5 Key "Exit" : To cancel Fitness Level setting and return to Stand-by Display.

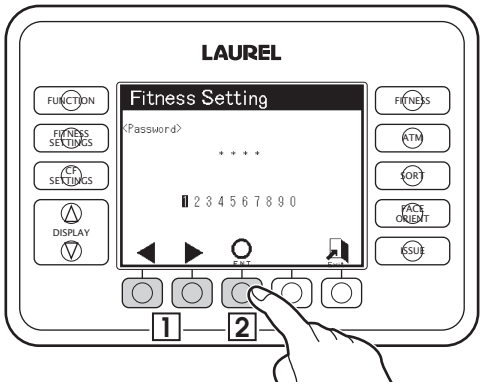

STEP-2 **Set a denomination and set Fitness Level.**

1. Move the cursor to your desired denomination by △ Key or ▽ key.
2. If the detailed Fitness Level Setting is set, skip following 3 and 4 and then go to STEP-3 to set Fitness Level.

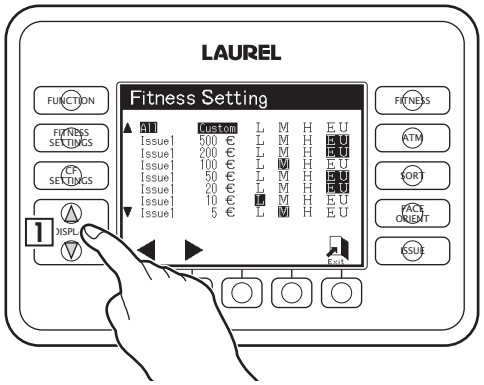

Setting of Fitness Level (Continued)

3. Move the cursor to your desired Fitness Level by F1 key or F2 key.

➢ If L, M, H or (EU) of ALL is selected, Fitness Level of all denominations will be set all together.

4. Skip STEP-3 and go to STEP-4.

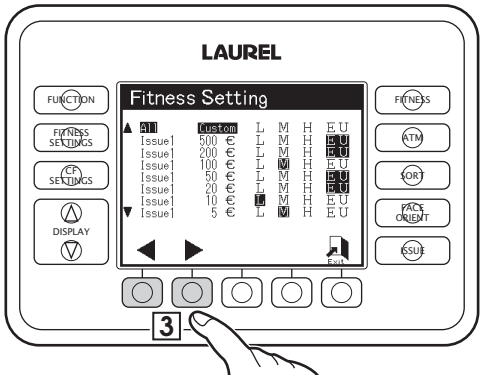

STEP-3 Detailed Fitness Level Setting

1. Press FITNESS SETTING key again while display is showing Fitness Setting Display. The display indicates Fitness Detail Setting Display.

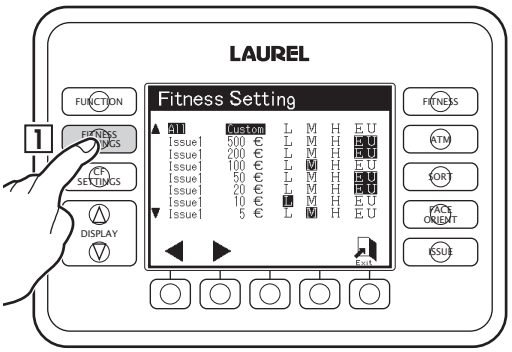

2. Move the cursor to desired item by △ Key or ▽ key.

3. Move the cursor to desired Fitness Level by F1 Key or F2 key.

4. Change the detection level by F3 key "-" or F4 key "+".

5. Press F5 key "Exit" to return the display to Fitness Setting Display.

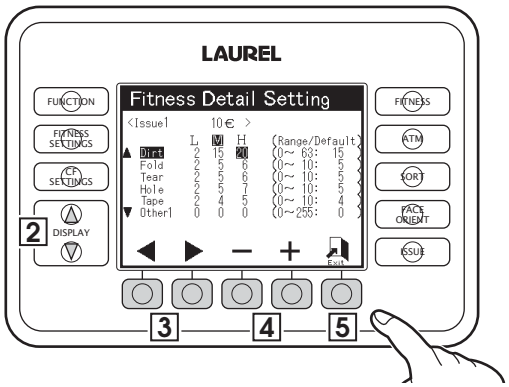

STEP-4 Press F5 key "Exit" to return the display to Fitness Setting Display.

➢ Fitness Level is memorized.

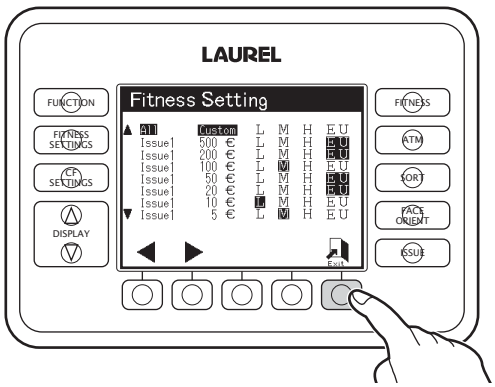

Setting of CF Level

♦ CF Level means the level of security feature detection.

STEP-1 **Press CF SETTING key while the display is showing Stand-by Display.**

➢ CF Setting Display is indicated.

➢ If Admin Mode is activated, the password is required.

Ex. Fitness

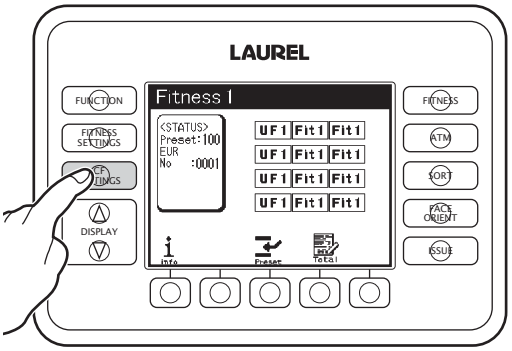

How to input the password.

1. Press F1 key or F2 key to select the number.
2. Press F3 key "ENT" to set the number in order.

➢ If the password is identical, the display indicates CF Setting Display.

F5 Key "Exit" : To cancel CF Level setting and return to Stand-by Display.

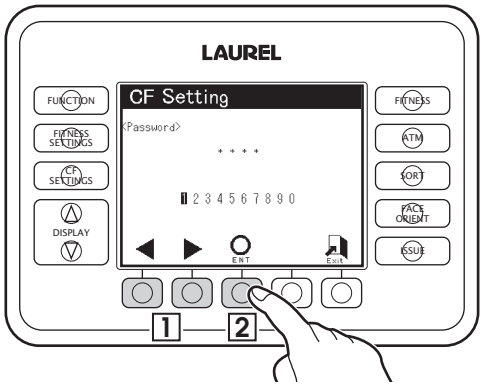

STEP-2 **Set denomination and set CF Level.**

1. Move the cursor to desired denomination by △ Key or ▽ key.
2. If the detailed CF Level Setting is set, skip following 3 and 4 and then go to STEP-3 to set CF Level.

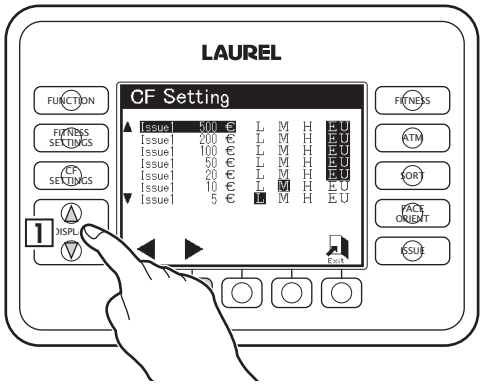

Setting of CF Level (Continued)

3. Move the cursor to desired CF Level by F1 key or F2 key.
4. Skip STEP-3 and go to STEP-4.

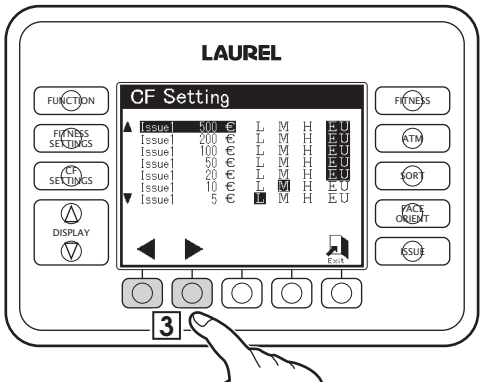

STEP-3 Detailed CF Level Setting.

1. Press CF SETTING key again while the display is showing CF Setting Display. Detailed CF Setting Display is indicated.

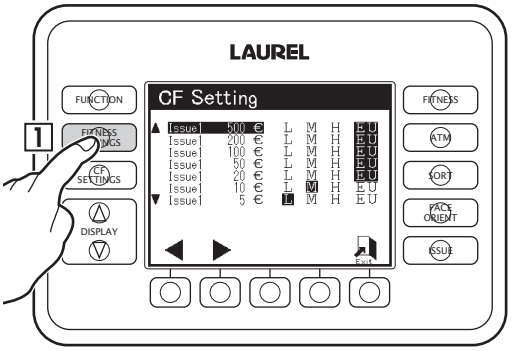

2. Move the cursor to desired item by △ Key or ▽ key.
3. Move the cursor to desired CF Level by F1 Key or F2 key.
4. Change the detection level by F3 key "-" or F4 key "+".
5. Press F5 key "Exit" to return the display to CF Setting Display.

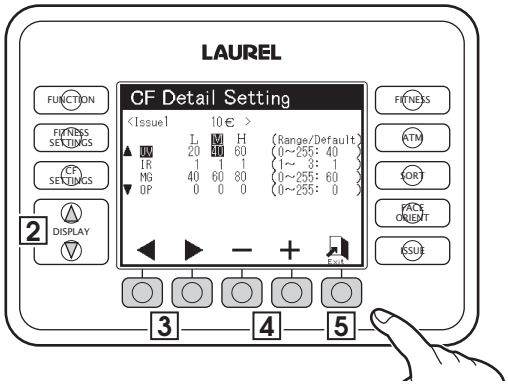

STEP-4 Press F5 key "Exit" to return to Stand-by Display.

➢ CF Level is memorized.

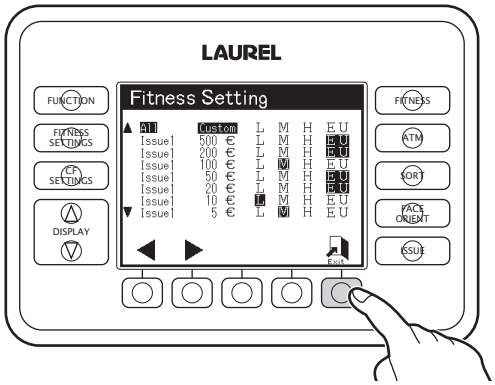

Function Setting

1) **Currency**.....Currency Selection.
2) **Language**.....Language Selection.
3) **Bright** .....Bright Setting of Main-Display.
4) **Contrast** .....Contrast Setting of Main-Display.
5) **Back Light** .....Time Setting of Back Light saving mode.
6) **Buzzer** .....Volume Setting of Buzzer.
7) **Date**.....Date Setting of internal clock.
8) **Time** .....Time Setting of internal clock.
9) **Admin**.....Admin Mode Setting.

STEP-1 **Press FUNCTION key while the display is showing Stand-by Display.**

Ex. Fitness

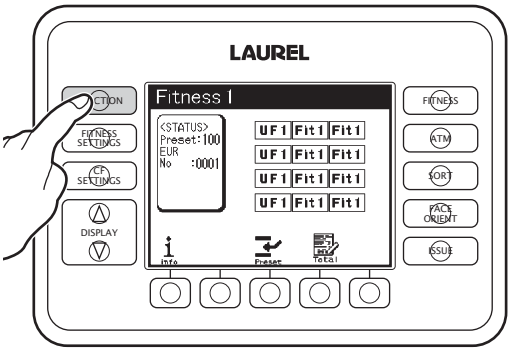

STEP-2 **Select item and change the setting.**

<u>Currency</u>

1. Move the cursor to select Currency by △ Key or ▽ key.
2. Move the cursor to desired Currency by F1 Key or F2 key.

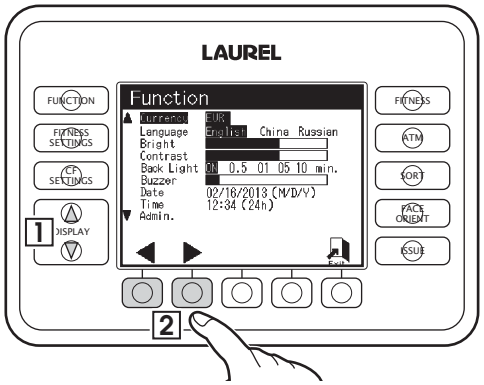

Function Setting (Continued)

Language

1. Move the cursor to select Language by △ Key or ▽ key.
2. Move the cursor to desired Language by F1 Key or F2 key.

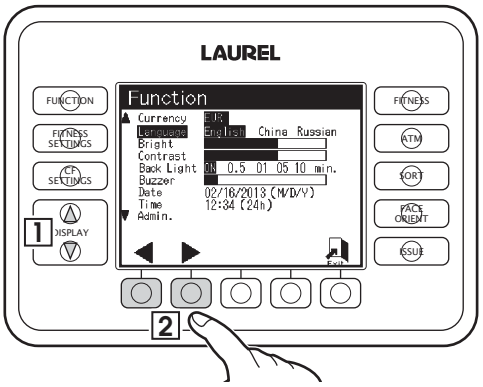

Bright

1. Move the cursor to Bright by △ Key or ▽ key.
2. Adjust the bright by F3 Key "-" or F4 key "+".

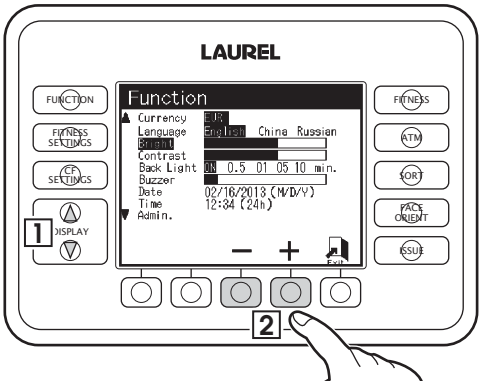

Contrast

1. Move the cursor to Contrast by △ Key or ▽ key.
2. Adjust the contrast by F3 Key "-" or F4 key "+".

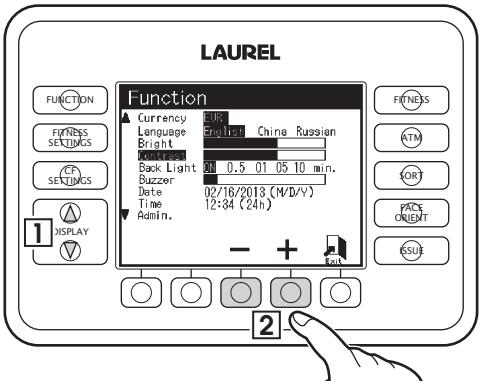

Back Light

1. Move the cursor to choose Back Light by △ Key or ▽ key.
2. Set the time by F1 key or F2 key.

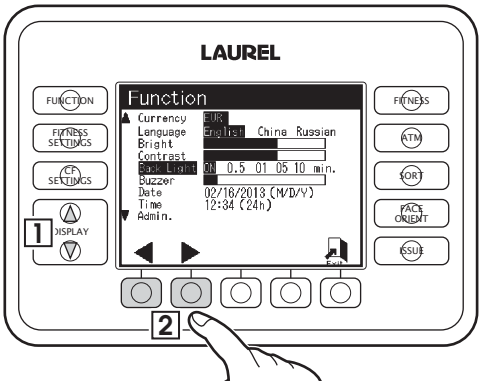

Function Setting (Continued)

Buzzer

1. Move the cursor to set the Buzzer by △ Key or ▽ key.
2. Adjust the buzzer sound by F3 key "-" or F4 key "+".

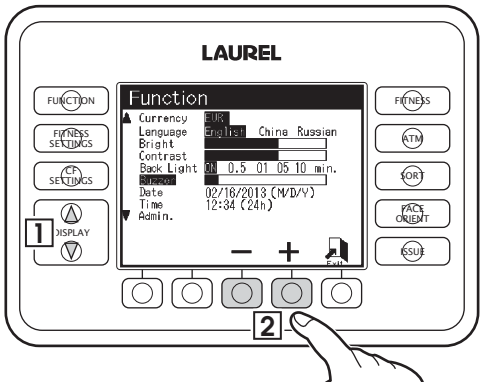

Date

1. Move the cursor to Date by △ Key or ▽ key.
2. Move the cursor to year, month or day by F1 key or F2 key.
3. Change the value by F3 "-" or F4 "+".

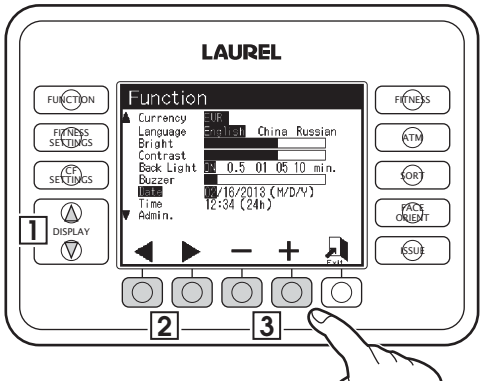

Time

1. Move the cursor to Time by △ Key or ▽ key.
2. Move the cursor to hour or minute.
3. Change the value by F3 "-" or F4 "+".

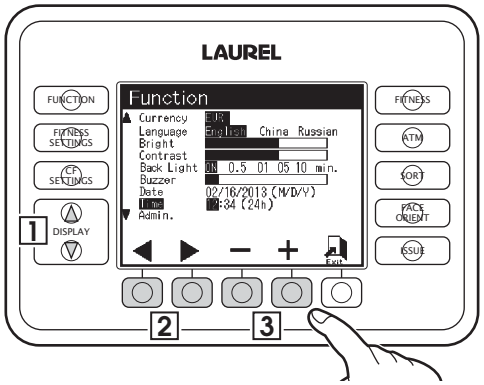

Admin

1. Move the cursor to Admin by △ Key or ▽ key.
2. Press F3 key "ENT".

➢ Password Input Display is indicated.

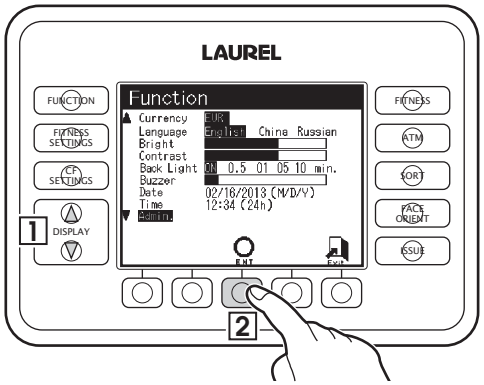

Function Setting (Continued)

3. Select a number by F1 key or F2 key and input it by F3 key "ENT" one by one.

➢ If the password is identical, the display indicates Administrator Setting Display.

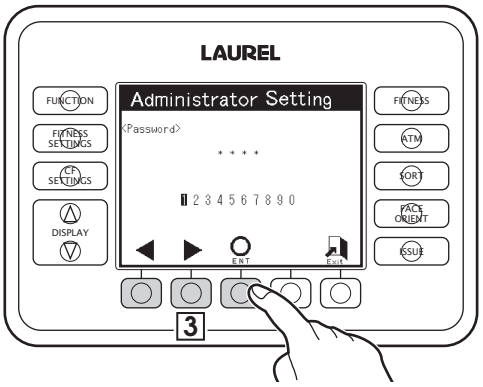

4. Change the setting Admin Mode for Fitness or CF Level Setting or change the password.

To activate Administrator Mode

4-1. Move the cursor to CF Setting or Fitness Setting by △ Key or ▽ key.

4-2. Move the cursor to Admin Mode.

Admin : In setting CF or Fitness Level, the password is required.

Normal : In setting CF or Fitness Level, the password is not required.

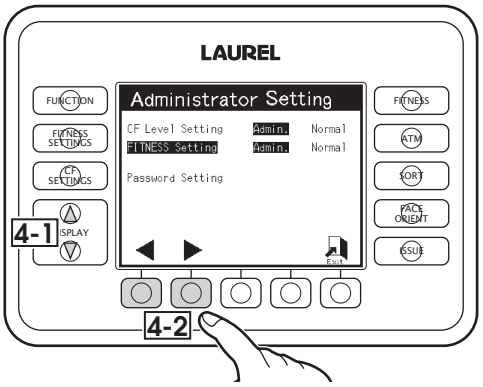

In order to change password

4-1. Move the cursor to Password Setting by △ Key or ▽ key.

4-2. Press F3 key "ENT".

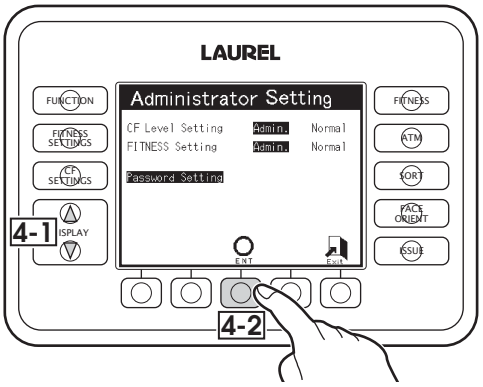

4-3. Input the current password and new password.

➢ FUNCTION display is indicated after changing the password.

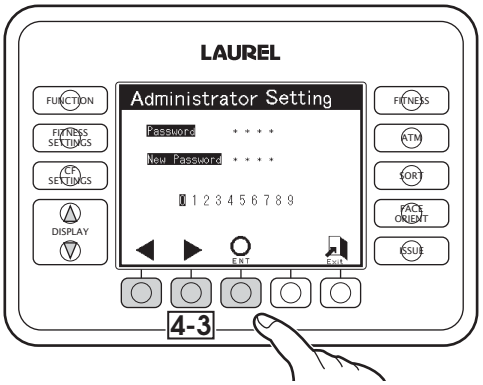

Function Setting (Continued)

STEP-3 **Press F5 key "Exit" to return to Stand-by Display.**

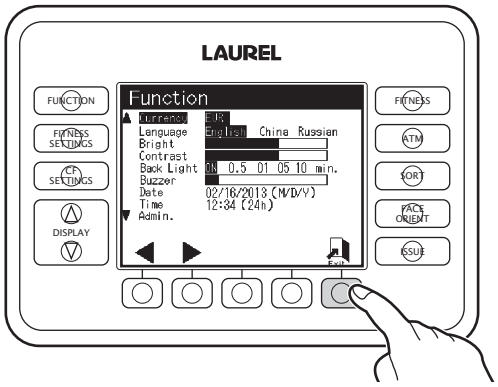

Cleaning

Periodical Cleaning and Position

- Clean the Dust Trays at least once in a day.“Dust Tray 1, Dust Tray 2”
- Clean the Transportation Path 1 and the Validator periodically.

Cleaning the Dust Tray 1

STEP-1 **Hold the handle of Dust Tray 1 and pull it out. Remove the dust in the Dust Tray 1.**

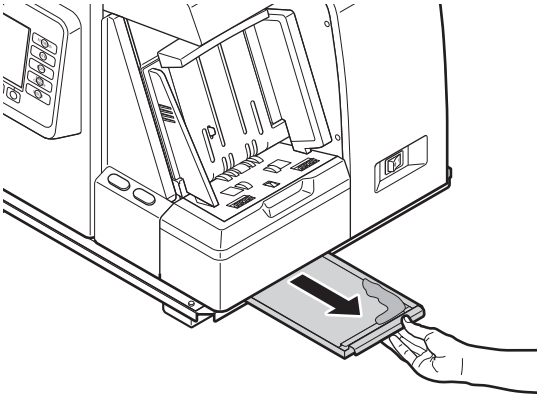

STEP-2 **Set the Dust Tray 1 back to the unit.**

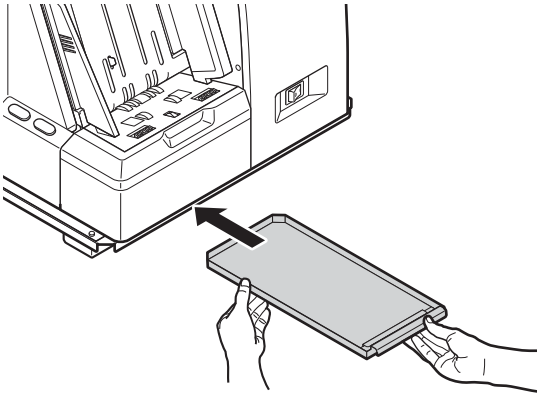

Cleaning the Dust Tray 2

STEP-1 **Open the Front Door by the handle.**

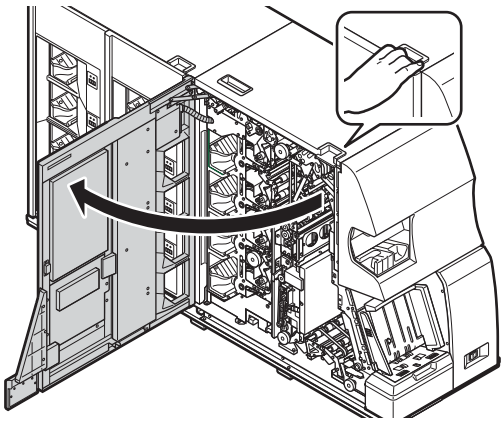

STEP-2 **Pull out Dust Tray 2 by holding green parts. Remove the dust in the trays.**

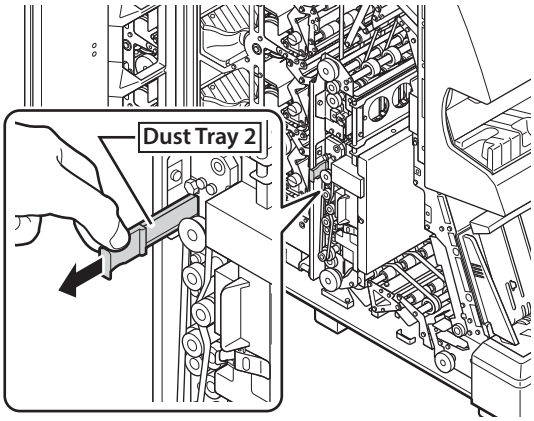

STEP-3 **Set Dust Tray 2 back.**

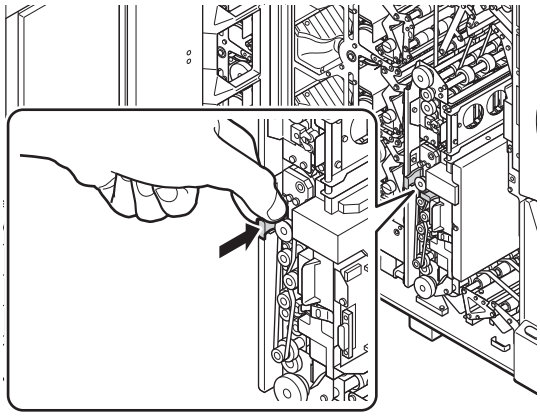

STEP-4 **Close the Front Door.**

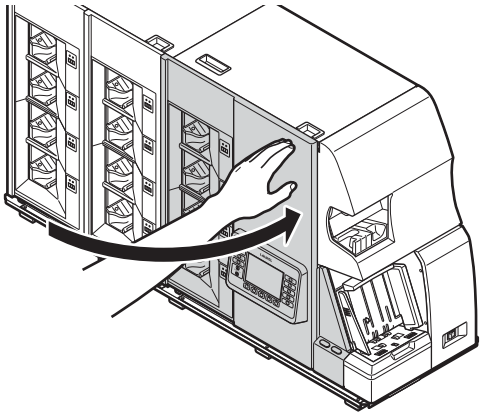

Cleaning Sensors

STEP-1 **Open the Front Door by the handle.**

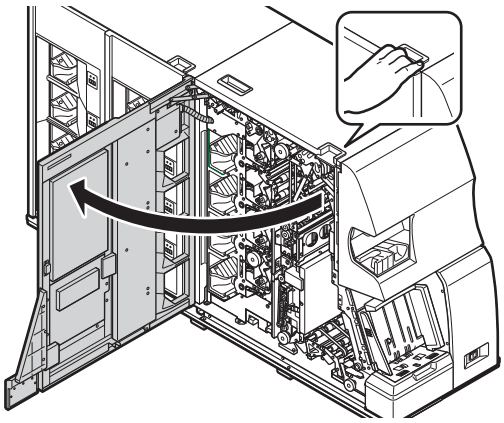

STEP-2 **Open the Transportation Path 1 and remove the dust.**

1. Unlock the Transportation Path 1 by lever 1 and open it.

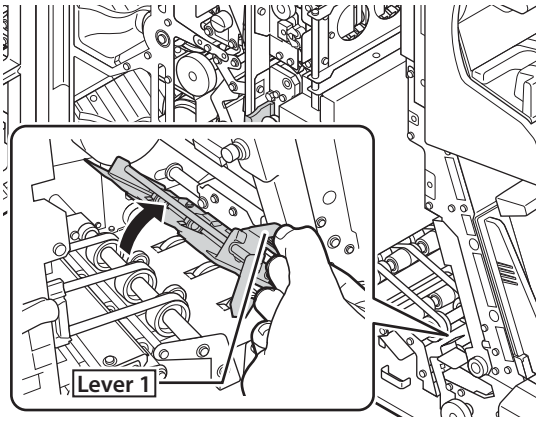

2. Clean the transportation path by cotton swab or brush.

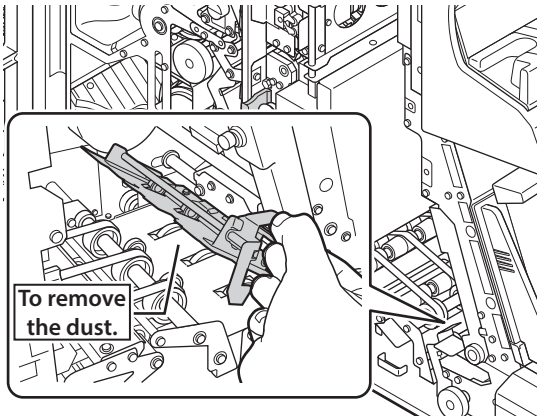

3. Close the Transportation Path 1 gently by holding lever 1.
4. Be sure to lock the Transportation Path 1 by locking lever 1.

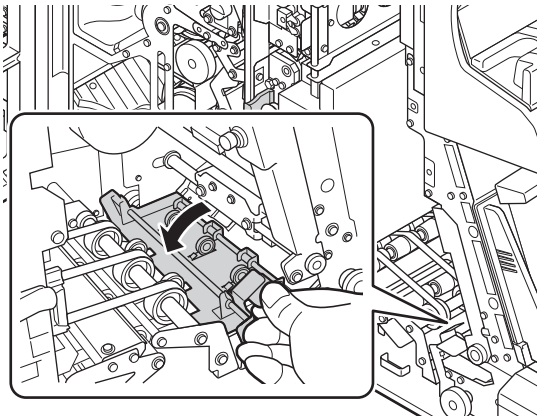

Cleaning Sensors (Continued)

STEP-3 **Open the Validator and clean the sensors.**

1. Unlock the clamp of Validator.
2. Open Validator with holding lever 3.

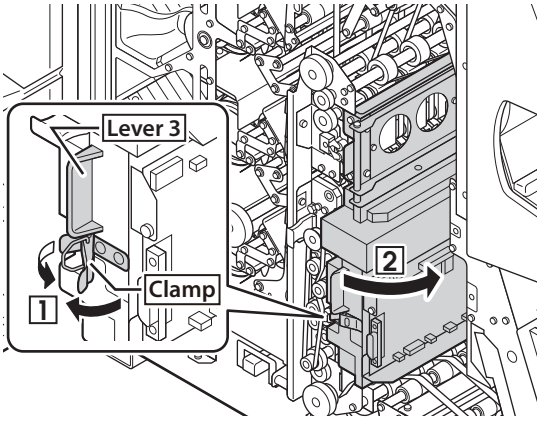

3. Clean the Validator by cotton swab or brush.

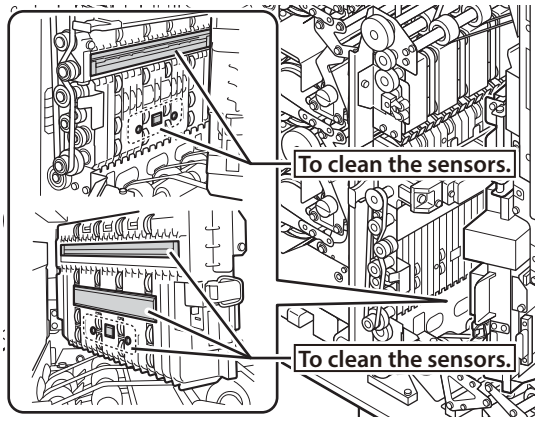

4. Open the Transportation Path 2 by holding lever 2 and remove the dust by cotton swab or brush.

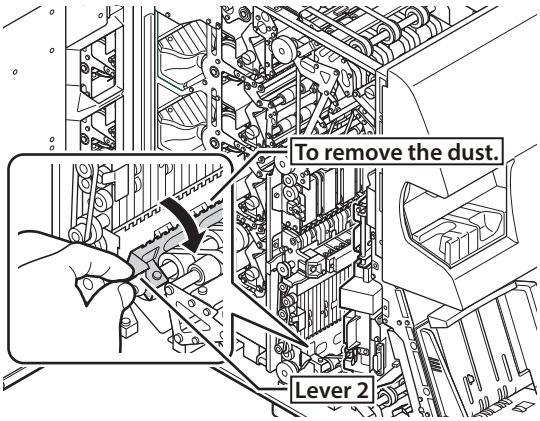

5. Close the Transportation Path 2 gently.

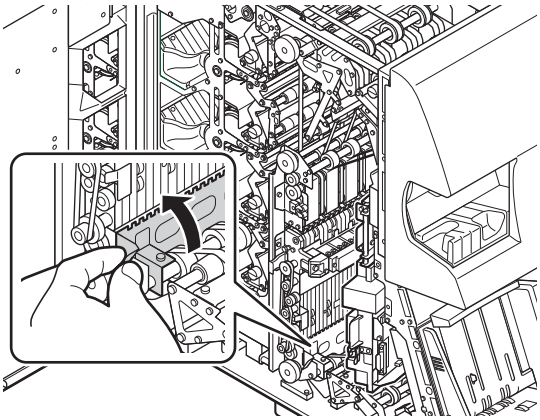

Cleaning Sensors (Continued)

6. Close the Validator by holding lever 3.
7. Lock the Validator by clamp.

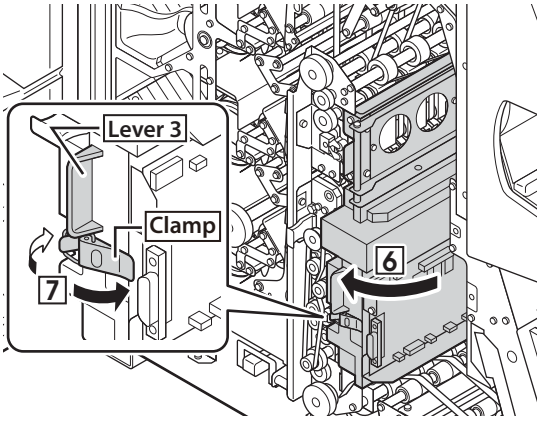

STEP-4 **Close the Front Door.**

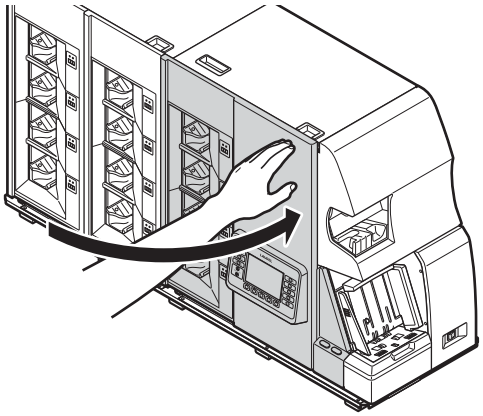

Chapter 3 IF AN ERROR OCCUR

How to clear an error

This chapter describes action to be taken when an error occurs.

Error Display

- If an error occurs such as note jam, the main-display switches to Error Display which shows error code and location of the error by guidance.
- In order to clear the error, check the error code and location of error and take remedial action correspond to Error and Remedial Measure page 41.

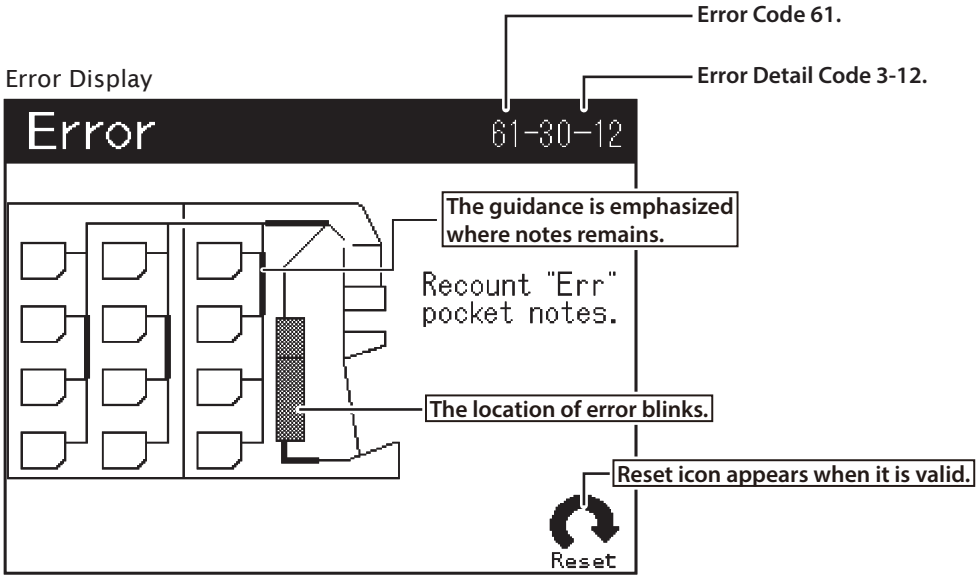

Point

- In case the problem does not clear, please contact your regional distributor and inform them of Error Code and Error Detail Code.

Error and Remedial Measure

Error Code	Content of Error	Remedial Measure
Error 10 to 32	Mechanical Error	1. Remove remaining notes according to the guidance on the display. 2. Press Reset key. 3. If the notes are discharged to the pockets after the reset actions, remove the notes from the pockets. Refer to How to remove jam notes Page 42.
Error 40	Validator Error	1. Remove remaining note according to the guidance on the display. Refer to How to remove jam notes Page 42.
Error 41 to 43	I/F Error	1. Turn off and on the Main SW.
Error 50 to 51	Note Remaining Sensor Error	1. Remove remaining notes according to the guidance on the display. 2. Press Reset key. 3. If the notes are discharged to the pockets after the reset actions, remove the notes from the pockets. Refer to How to remove jam notes Page 42.
Error 60 to 67	Jam Error	1. Remove remaining notes according to the guidance on the display. Refer to How to remove jam notes Page 42.
Error 68 to 6A	Cover Open	1. Close the Front Cover. 2. Press Reset key.
Error 70 to 76	Adjustment Error	1. Turn off and on the Main SW.
Error E0 to FF	System Error	1. Turn off and on the Main SW.

How to remove jam notes

Description of Guidance

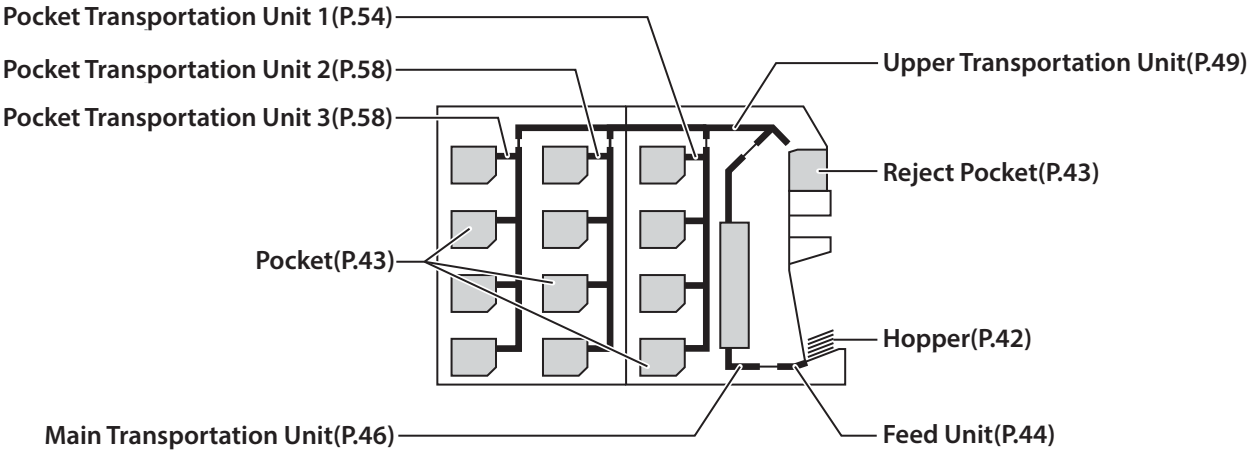

Hopper

STEP-1 **Remove all the notes from the Hopper.**

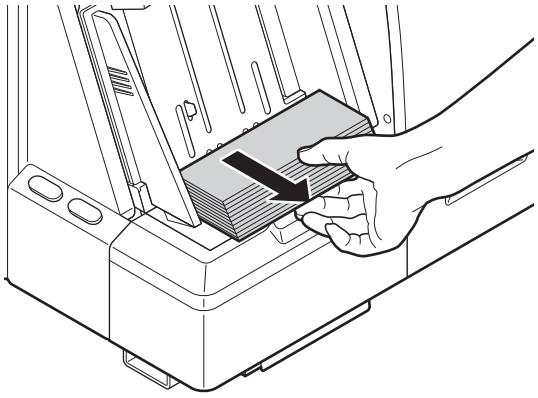

STEP-2 **Press F5 key "Reset".**

➢ The reset action gets started.

➢ Stand-by Display is shown after completing the reset action normally.

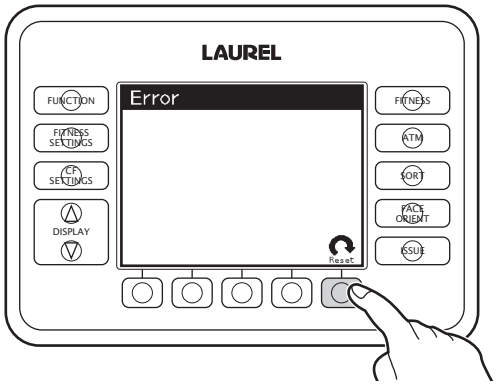

Reject Pocket

STEP-1 **Remove all the notes from the Reject Pocket.**

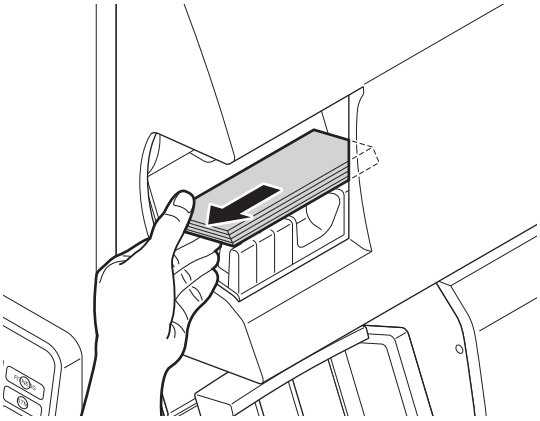

STEP-2 **Press F5 key "Reset".**

➢ The reset action gets started.

➢ Stand-by Display is shown after completing the reset action normally.

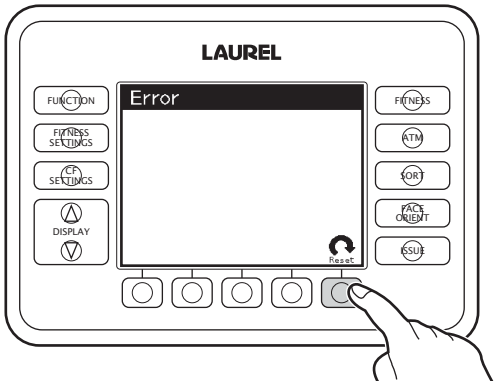

Pocket

STEP-1 **Remove all the notes from the Pockets.**

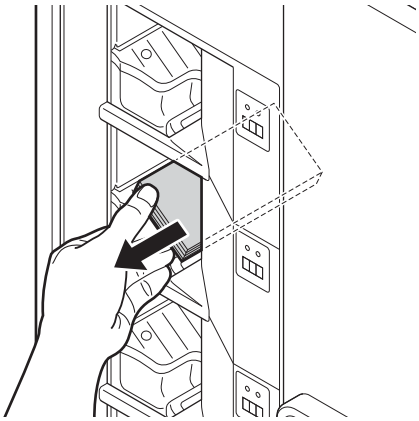

STEP-2 **Press F5 key "Reset".**

➢ The reset action gets started.

➢ Stand-by Display is shown after completing the reset action normally.

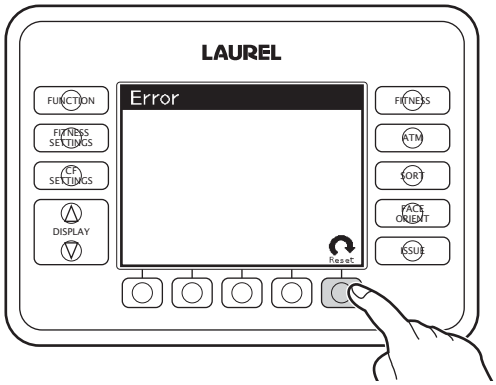

Feed Unit

STEP-1 **Open the Front Door by the handle.**

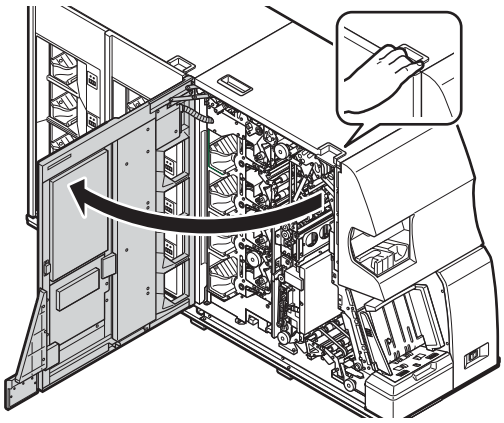

STEP-2 **Remove remained note by opening the Transportation Path.**

1. Hold Lever 1 to unlock the Transportation Path 1 to open.

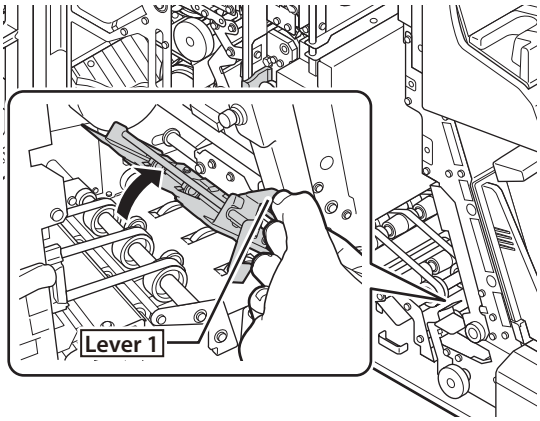

2. Remove remained note.
   If the note are blocked, turn the knob A. Then remove it.

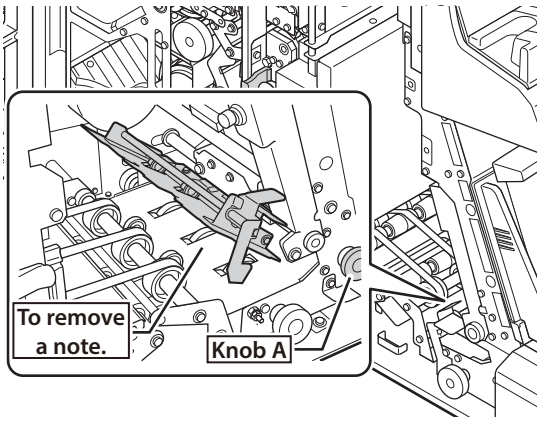

3. By holding the Lever 1, close the Transportation Path 1 gently.
4. Release the Lever 1 and make sure that the Transportation Path 1 gets locked.

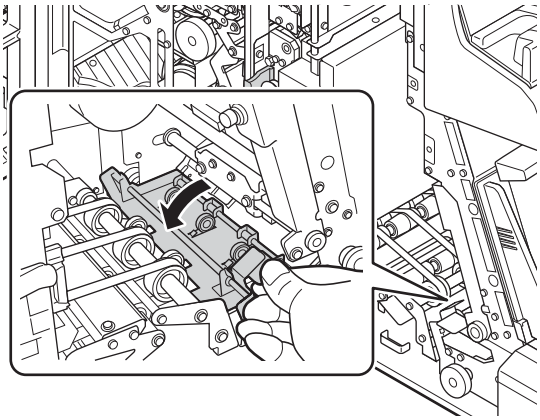

Feed Unit (Continued)

STEP-3 **Close the Front Door.**

➢ The reset action gets started.

➢ Stand-by Display is shown after completing the reset action normally.

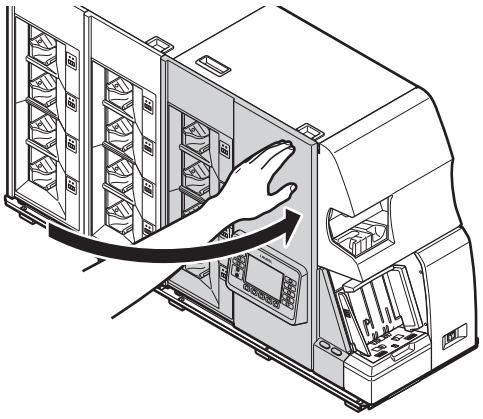

➢ If the reset action does not gets started, press F5 “Reset” key to activate it.

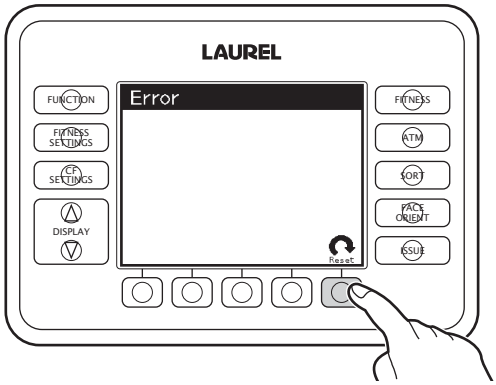

Main Transportation Unit

STEP-1 **Open the Front Door by the handle.**

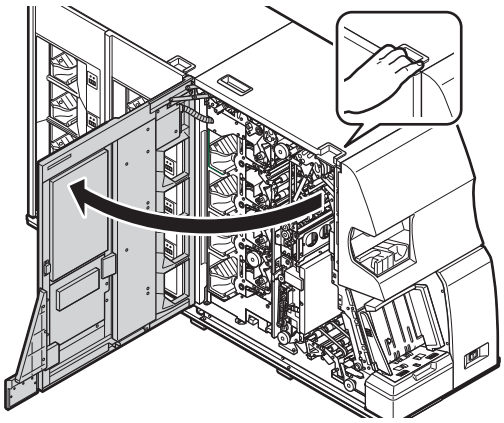

STEP-2 **Open the Upper Door and be sure to lock the door kept open.**

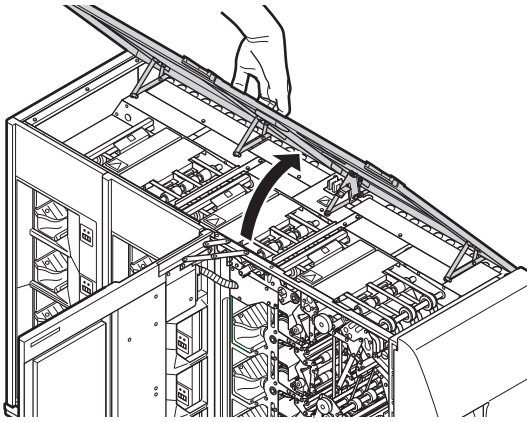

STEP-3 **Open the Transportation Path 4.**

1. Unlock Transportation Path 4 by pressing Lever 4 in the direction to arrow mark.
2. Open Transportation Path 4 till locking the position.

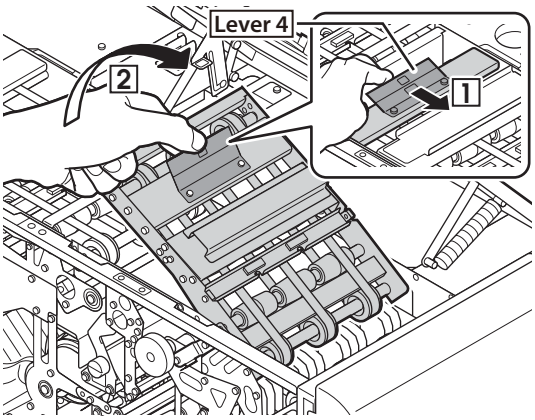

STEP-4 **Open the Validator Unit and remove remained notes.**
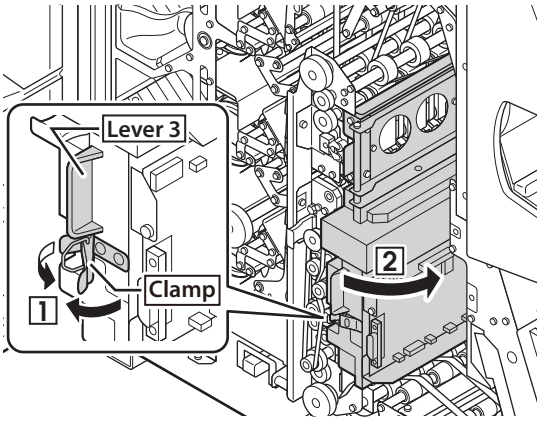
1. Release the clamp of Validator Unit.
2. Open the Validator Unit by holding the Lever 3.