Pocket Transportation Unit 1 (Continued)

In case a note is blocked:

1-1. Turn the knob either transportation path D1 to D4 where a note jammed and release the lock.

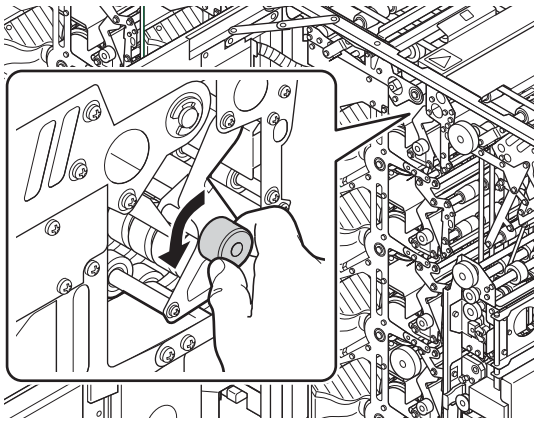

1-2. Pull the knob and open the transportation path.

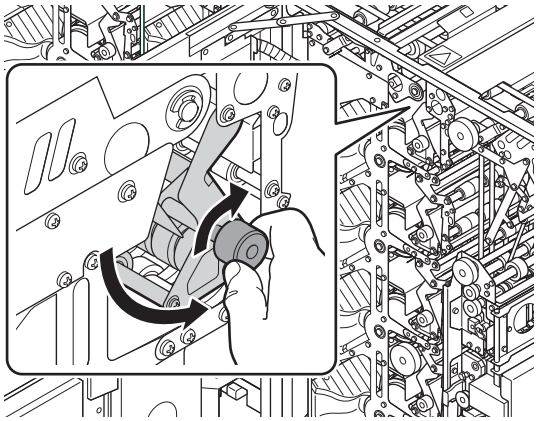

1-3. Turn knob D to the direction to arrow mark and remove note at transportation path.

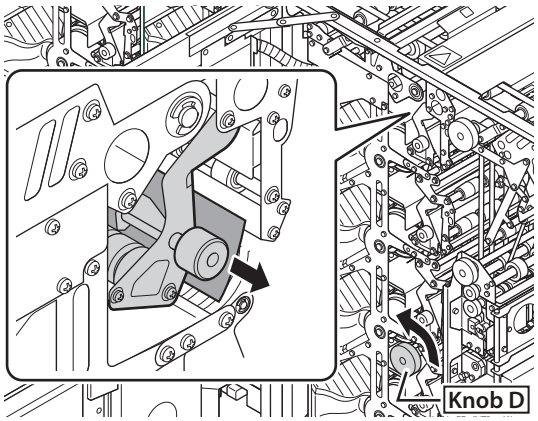

1-4. Pull the knob and close the transportation path. Tighten the knob to the direction of arrow mark.

➢ Be sure the transportation path is locked.

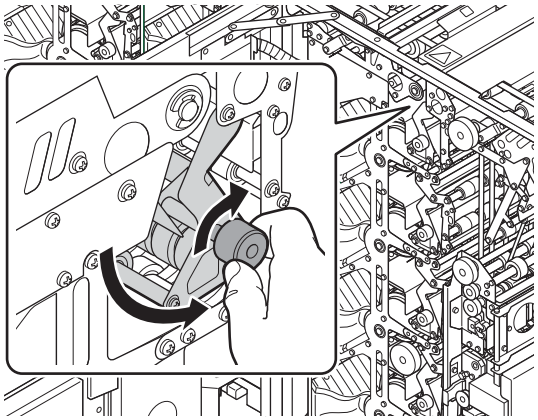

Pocket Transportation Unit 1 (Continued)

2. Turn the knob E to H and remove remained notes to the pocket.

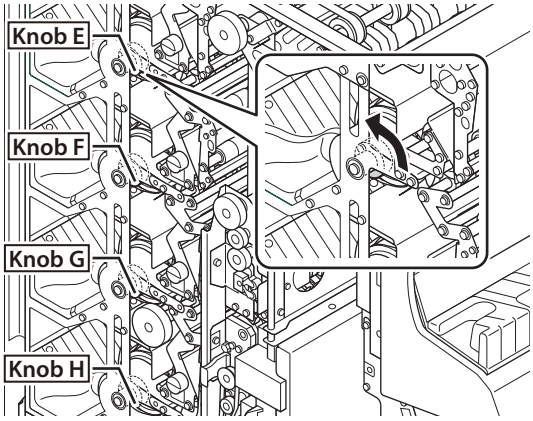

3. Remove notes from the pocket.

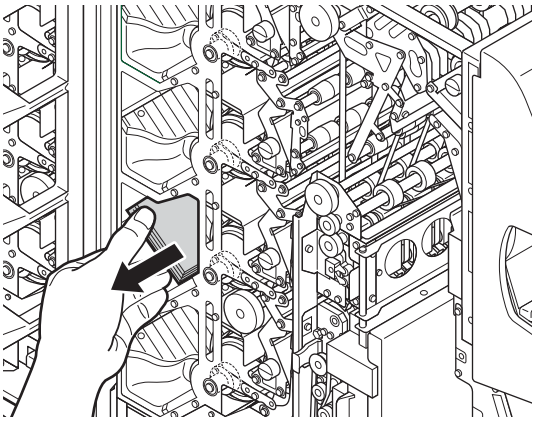

STEP-5 Close Transportation Path 4.

1. Hold up the Transportation Path 4 with holding Lever 4 and release the lock by pressing Lever 5.
2. Close the Transportation Path 4 gently.

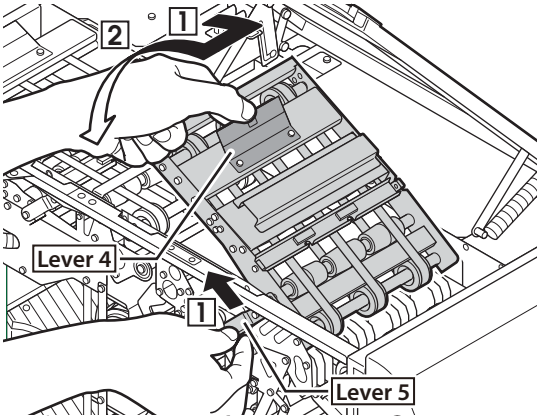

STEP-6 Close the Front Door.

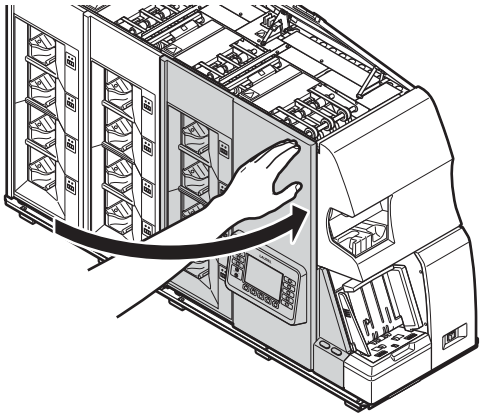

Pocket Transportation Unit 1 (Continued)

STEP-7 Close the Upper Door.

1. Keep up the Upper Door to unlock by pressing the Lever 6.
2. Close the Upper Door gently.

➢ The reset action gets started.

➢ Stand-by Display is shown after completing the reset action normally.

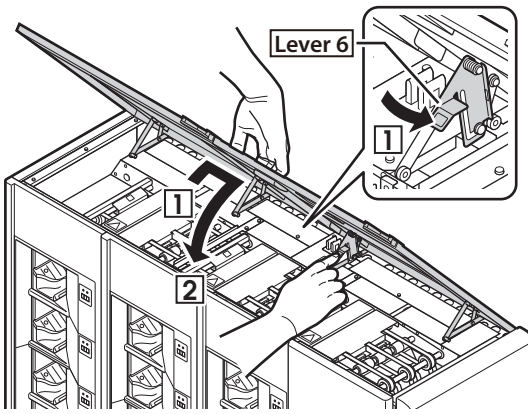

➢ If the reset does not get started, press F5 key to activate the reset.

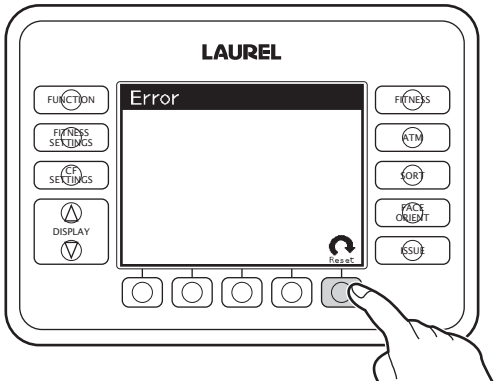

Pocket Transportation Unit 2, Pocket Transportation Unit 3

STEP-1 **Open the Front Door by the handle.**

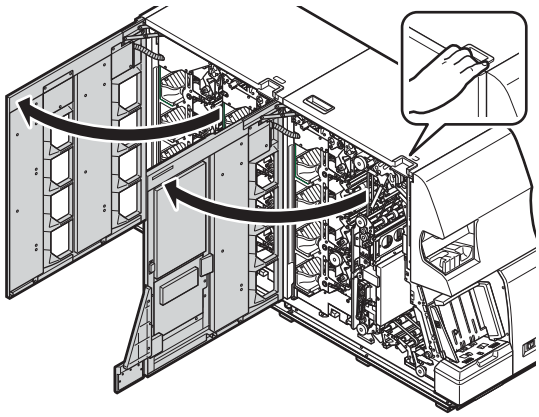

STEP-2 **Open the Upper Door and be sure to lock the door kept open.**

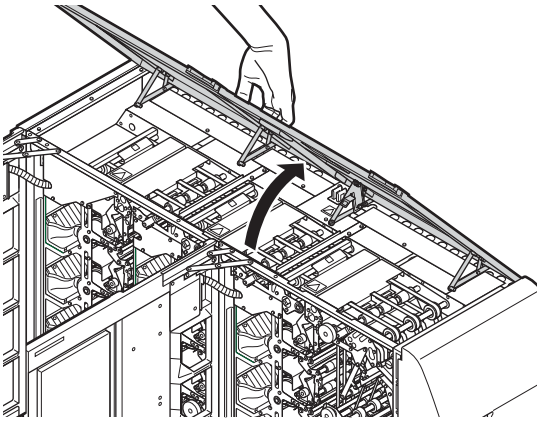

STEP-3 **Open Transportation Path 7**

1. Unlock the Transportation Path 7 by pressing Lever 7 in the direction to arrow mark.
2. Open the Transportation Path 7 till locking the position.

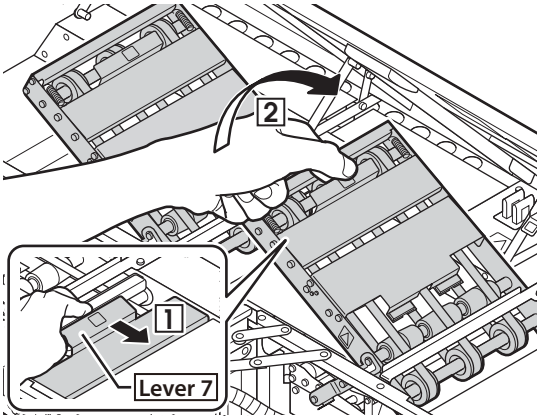

STEP-4 **Remove notes remained transportation path.**

1. Turn knob D to the direction of arrow mark and remove note from transportation path.

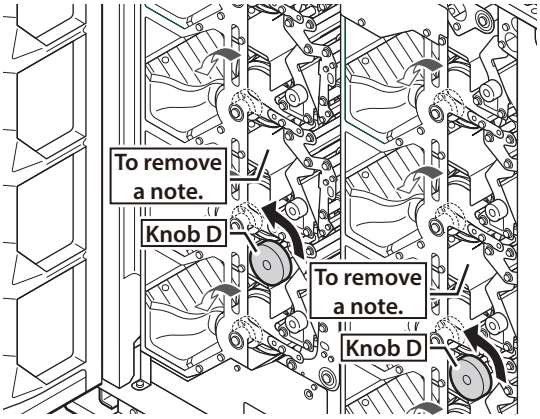

Pocket Transportation Unit 2, Pocket Transportation Unit 3 (Continued)

In case a note is blocked:

1-1. Turn the knob at either transportation path D1 to D4 where the note jammed and release the lock.

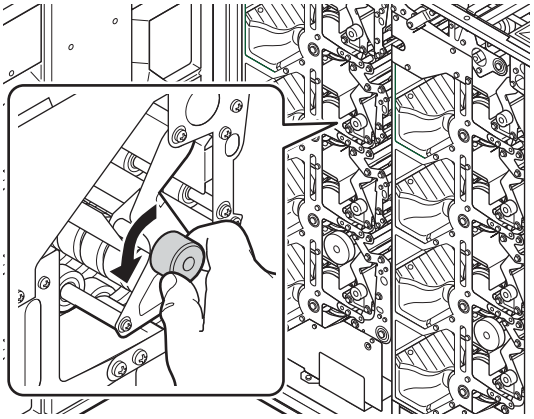

1-2. Pull the knob and open the transportation path till locking it.

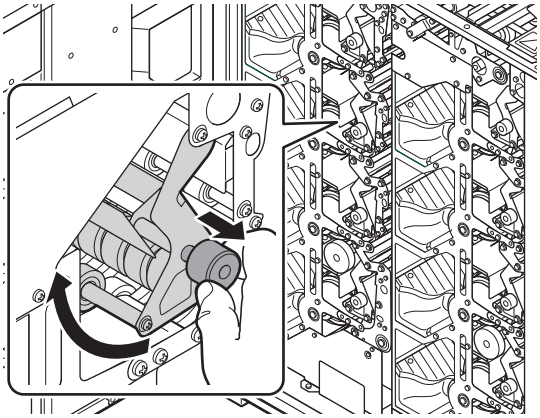

1-3. Turn knob D to the direction of arrow mark and remove the note at transportation path.

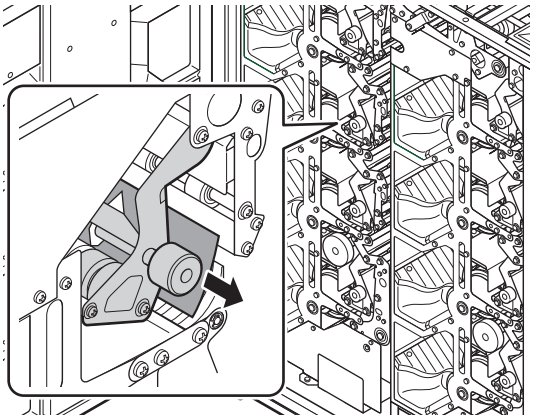

1-4. Pull the knob and close the transportation path. Tighten the knob to the direction of arrow mark.

➢ Be sure the transportation path is locked.

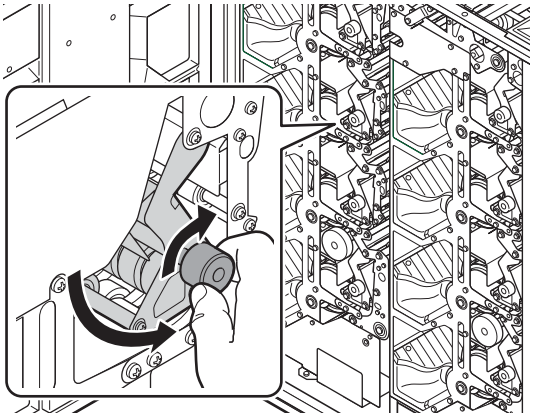

Pocket Transportation Unit 2, Pocket Transportation Unit 3 (Continued)

2. Turn the knob E to H and discharge the note to the pocket.

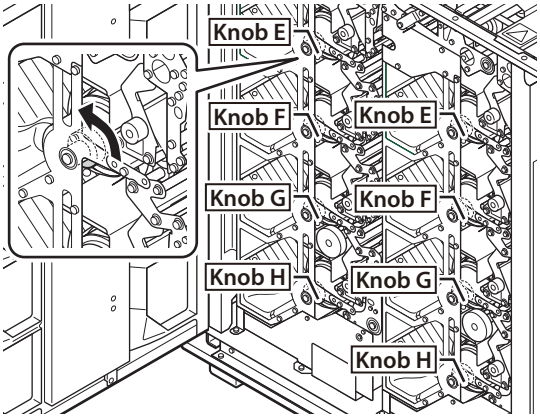

3. Remove notes from the pocket.

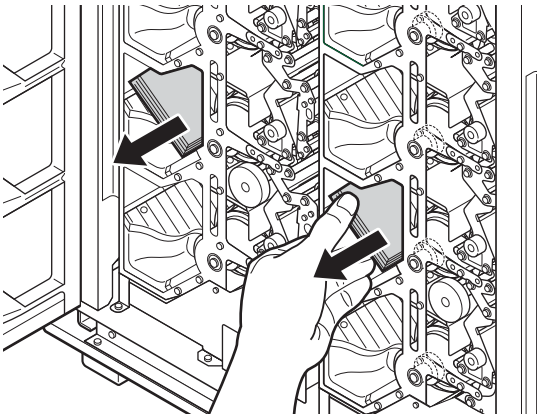

STEP-5 Close the Transportation Path 7

1. Hold up the Transportation Path 7 with holding Lever 7 and release the lock by pressing Lever 8.
2. Close the Transportation Path 7 gently.

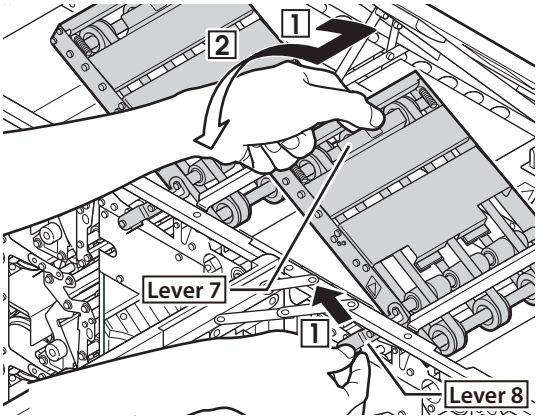

STEP-6 Close the Front Door.

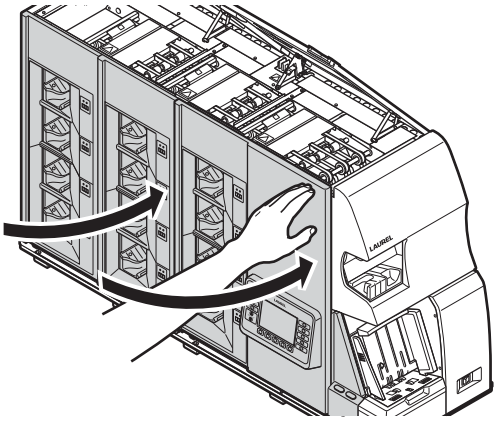

Pocket Transportation Unit 2, Pocket Transportation Unit 3 (Continued)

STEP-7 Close the Upper Door.

1. Keep up the Upper Door to unlock by pressing the Lever 6.
2. Close the Upper Door gently.

➢ The reset action gets started.

➢ Stand-by Display is shown after completing the reset action normally.

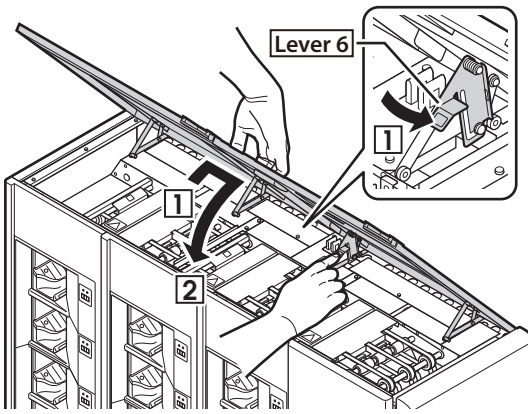

➢ If the reset does not get started, press F5 key to activate the reset.

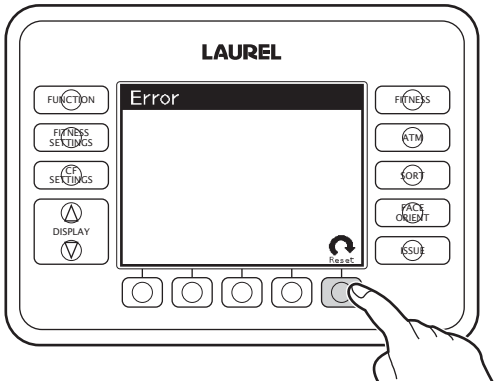

Chapter 4 INSTALLATION, SPECIFICATIONS AND OTHERS

Installation

Condition of installation

- Install the unit under following environmental conditions.
- Temperature: 5 to 35 ˚C
- Humidity: 35 to 80 %
- 40 cm or more higher flat place with sufficient withstand load.
- The unit was not designed as waterproof. It should be installed indoor.
- The unit should be installed away form a sink or other water place.
- Keep away from direct sunlight and spot light.
- Do not place in a dusty area.
- Do not install the unit near the air-conditioning, heater or humidifying device.

Installation and Transfer

- The unit requires adjustment while its installation or after its transfer. Please contact your regional distributor in transporting the unit.

Specifications

Items	Specifications
Acceptable bank note size	Shorter edge: 61 to 82mm. Longer edge: 117 to 177mm.
Hopper Capacity	Approx. 500 pcs. Height of bank notes is 150mm or less.
Counting Speed	14 notes per second with the smallest size of Yuan,Euro,Dollar,RUBLE currency. Count speed changes depending on the note size.
Note Transportation direction	Shorter edge
Feeding Method	Friction Roller Feeding
Pocket Capacity	12 pockets Capacity of the pocket is maximum 200 pcs.
Reject Pocket Capacity	Maximum 200 pcs.
Outer Size	Width 1222 x Depth 416 x Height 730 mm (It is not included the projected part.)
Weight	185kg
Power source	Phase: Single phase Rated Power Source: AC100V-240V (+6%, -10%) Frequency: 50/60Hz (±1Hz) It requires proper grounding.
Power Consumption	Operation 450W Stand-by 160W
Calorie Consumption	Operation 1620 kJ/h Stand-by 576 kJ/h
Condition of installation	
Temperature	In operation: 5˚C ~ 35˚C (Power on) Not in operation: -5˚C ~ 50˚C (Power off)
Humidity	In operation: 35% ~ 80% (Power on) Not in operation: 20% ~ 85% (Power off) No condensation and frost.
Installation	Indoor installation Note1) To avoid the direct sunlight. Note2) To keep away from rain or wet areas.
Interface	USB LAN RS-232C(Connect the Customerdisplay or Printer)

Accessories

- Cotton Swab 1 pc.
- Brush for cleaning (2 type) 1 pc. each.
- User manual 1 pc.
- Power Cable 1 pc.
- Modular Cable (With Ferrite Core)1 pc.

Note Sorter K12

User Manual

Dec. 2018 First Edition

Copyright © LAUREL BANK MACHINES CO.,LTD. 2018 All rights reserved.

1QF00R10000AB-A