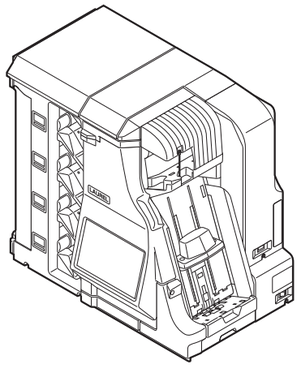

Ks Series
Safety Instructions & Quick Reference

This User Manual describes how to use the product and precautions for safe use.
Please read carefully and understand this manual before operating the product.
Keep this User Manual handy for ready reference.

LAUREL

Note

1. It is strictly prohibited to use part or this entire manual to other publication without permission of the publisher.
2. The contents of this manual and the specification of the product may change without a preliminary notice for future improvement.
3. Please contact to the regional distributor of LAUREL, if there are any doubtful points, or errors, etc. in this manual.
4. It is understood that LAUREL will not be responsible for any losses caused by use of the product, or regardless of any errors in the manual.
5. The illustrations in this manual may differ from the actual product as they are abstract.
6. The display screen illustrated in this manual may differ from an actual display screen.
7. Please contact a regional distributor of LAUREL if the manual has disorderly binding or missing pages.
8. Please contact a regional distributor of LAUREL for loss or damage of the manual.

FCC Caution

Changes or modifications not expressly approved by the party responsible for compliance could void the user's authority to operate the equipment.

FCC Notice

This machine has been tested and found to comply with the limits for a Class A digital device, pursuant to Part 15 of the FCC Rules. These limits are designed to provide reasonable protection against harmful interference when the equipment is operated in a commercial environment. This equipment generates, uses, and can radiate radio frequency energy, and if it is not installed and used in accordance with the instruction manual, may cause harmful interference to radio communications. Operation of this equipment in a residential area is likely to cause harmful interference in which case the operator will be required to correct the interference at operator's own expense.

FCC Label in The Machine

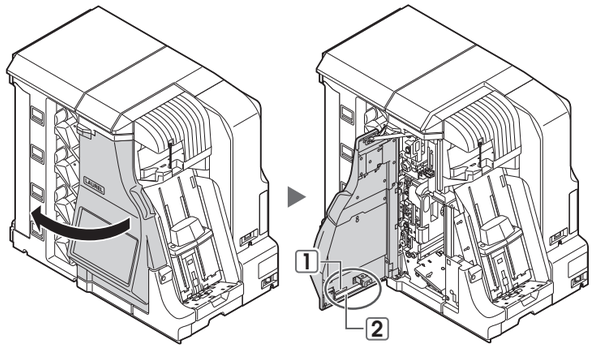

1

FCC ID：2ARVCKS

2

This device complies with part 15 of the FCC Rules. Operation is subject to the following two conditions: (1) This device may not cause harmful interference, and (2) this device must accept any interference received, including interference that may cause undesired operation.

Request from us

If you do not use the machine for long time, Please be sure to turn off the power switch.
When turning on and off the power switch, Please take a time interval of 5 seconds or more.
Handle the machine with care.
- Do not strike or shake the machine.
- Close all doors before start operation.
- Press the keys or switches gently.

About the installation of the machine

Please avoid high temperature, high humidity, dust, vibration, and direct sunlight.
In case the environment of operation exceeds room temperature (5° C to 35° C) and humidity (35% to 80%), the performance of the machine will deteriorate remarkably.
Please use an air-conditioner, a humidifier, etc. in case of above conditions.

About Dew Condensation

In case the machine is installed to places where are high humidity or move from the place is cold to warm, may cause to the dew condensation.
In case the dew condensation, please leave the machine for hours at the place where you use, and turn on the switch after that.

Installation, Transfer

In order to have correct function of the machine, it is necessary to have appropriate adjustment for Installation and Transfer.
When you install or transfer this machine, please ask for our local distributor near your place.

Handle the machine with care children

Since this product is the business and the industrial equipment, it is not suitable to be used in places where children may possibly be located.

Safety Caution

This manual is used to follow symbols to make you cautious in order to use the machine safely and to prevent you from a risk of an injury or from losing your property.
It describes contents of danger and/or how to prevent the danger together with marking which indicates contents of the danger near the symbols.
Please read through this manual to understand the meanings of symbols and markings before use.

Description of Warning, Caution and Examples

Warning	In case the machine is wrongly operated without respect to this icon, there is a possibility of fatal or serious injury to the operator.
Caution	In case the machine is wrongly operated without respect to this icon, there is a possibility of injury or material physical damage to the machine.

Description of Symbol and Examples

	This mark requires all power plug be removed before taking necessary action.
	This mark instructs you to connect earth wire to the proper grounding.
	This mark indicates an action must be carried out.
	This figure symbol indicates prohibited acts.
	This symbol warns that it must not touch.
	This symbol warns the operator not to disassemble the machine. There is a risk of danger.

	This symbol warns possibility of fire and smoke.
	This symbol warns of electric shock.
	This symbol warns the operator to be cautious not to pinch a finger etc. In case of handling without care, there is a risk of injury.

Safety Caution

Warning

	If smoking, abnormal smell, noise is detected from the machine, stop the operation and pull out the plugs from outlet. Then contact a regional distributor of LAUREL. Without respect to this caution, there is risk of failure, an electric shock or a fire.
	If a liquid is spilled over the machine or metal, burnable material are dropped inside of the machine, do not use the machine. Pull out the plug from outlet and contact a regional distributor of LAUREL. Otherwise, there is a risk of an electric shock or a fire.
	Make sure to connect earth wire to the proper grounding. Otherwise, there is a risk of an electric shock.

Caution

	Do not install the machine at a moist area, dusty or any place for handling water. There is a risk of an electrical shocks and a fire.
	Do not use the power cable which is not for the machine.There is a risk of failure, an electric shock or a fire.
	The power cable enclosed in the box is exclusive for the machine. Use the cable for the machine. Otherwise there is a risk of failure, an electric shock or a fire.
	Make sure the machine has stopped completely before accessing inside the machine. Otherwise, there is a risk of an injury.
	Hold the specified part when opening and closing doors and be sure not to pinch your finger. Otherwise, there is a risk of an injury.
	This device is not suitable for use in places where children may possibly be located.
	Do not disassemble the machine except having been instructed in the user manual. There is a risk of an electric shock and a fire.
	Although it is a heavy device, it is installed on a table, so place it on a desk with sufficient strength so that it is not placed on an unstable place.

Safety Caution

Power cord notice

Please use the power code which is enclosed with the machine or please use the one with the below mentioned specifications.
- Connect to a three-pole power outlet that has been properly grounded.
- Rated voltage above the power supply voltage used.
- Rated current that is higher than the rated current of the equipment described in the manufacturing nameplate or instruction manual.
- Supports safety certification required in the country of use.
- The shape of the connector connected to the device conforms to "IEC-60320-C13".
- To prevent the power code from bending or putting a burden on the power code connection, please use a power code whose connection shape matches the installation location.

If any other than the above is used, smoke, fire, electric shock, equipment failure may occur, and the authorities may give guidance.

Caution Mark in The Machine

The safety caution labels are attached to the place which is hazardous area in the machine. These labels reminds an operator conscious of the danger while operating the machine.
If the caution label is unreadable, peeling off and/or stain, please contact a regional distributor of LAUREL.

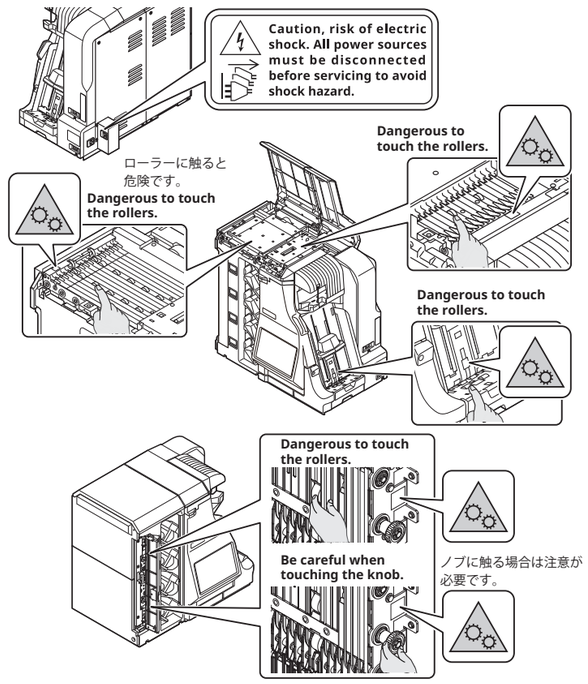

校正確認用_2020-10-17

Name of each part

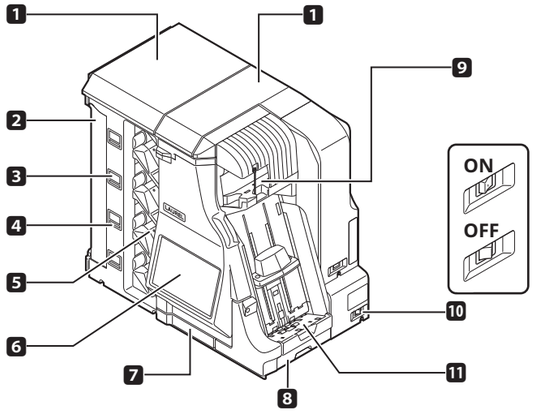

1 Upper Cover
2 Sub-Front Cover
3 Sub-Display
4 Status LED
5 Pocket
6 Main-Display
7 Dust Tray1
8 Dust Tray2
9 Reject Pocket
10 Power Switch
11 Hopper

Quick instruction

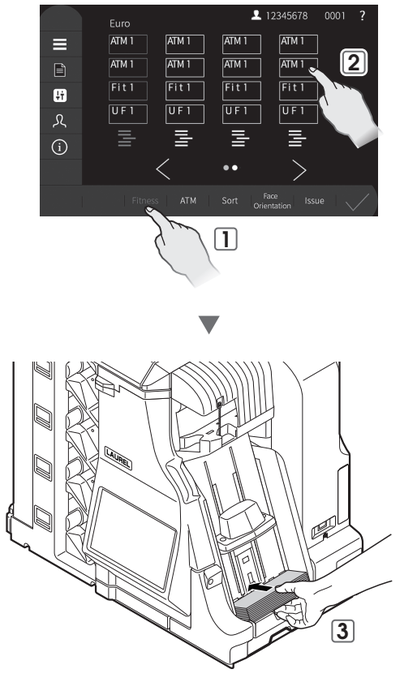

Guide function

Touch "?" to display the operation description.

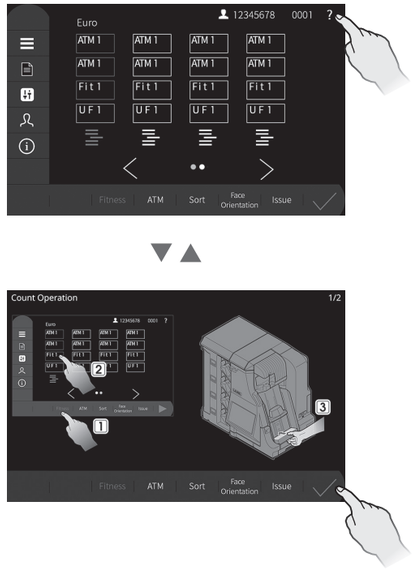

Description of Sort Mode

Fitness Mode

Sorting out Fit notes and Unfit notes. In case the banknotes are mixed, the 1st counted Note will be the target for sorting.

ATM Mode

Sorting out ATM Note. In case the banknotes are mixed, the 1st counted denomination will be the target for sorting.

Sort Mode

Sorting out denomination.

Face/Orient Mode

Sorting out banknote based on Facing and Orientation. In case the banknotes are mixed, the 1st counted denomination will be the target for sorting.

Issue Mode

Sorting out New and Old banknote based on issue.
In case the banknotes are mixed, the 1st counted denomination will be the target for sorting.

Description of Status LED

LED indicates note category by color of lights.

Sort Mode \ Status LED	Blue	Green	Orange	Red
Fitness	Fitness	—	Unfit Note	Counterfeit Note
ATM	ATM Note	Circulated Note	Unfit Note	Counterfeit Note
Sort	Single Denomination	Mixed Denomination	—	Counterfeit Note
Face/Orient	Genuine Note	—	—	Counterfeit Note
Issue	New Note	Old Note	Before 2Generations	Counterfeit Note

How to open the Guides and Vaiidator

Guide 1

Guide 2

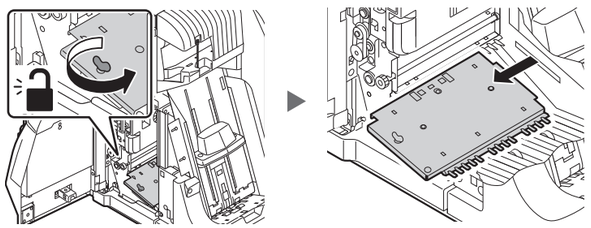

Guide 3

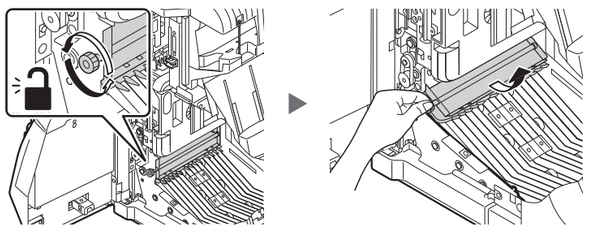

How to remove the Jammed Note

Validator

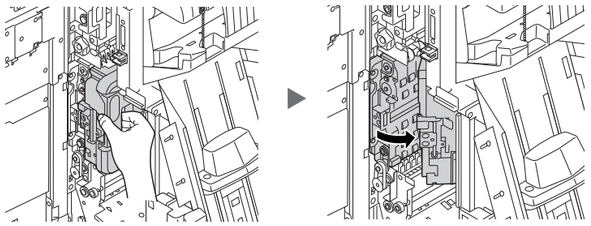

Guide 4

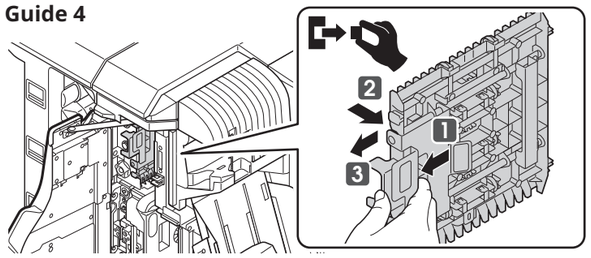

Guide 4

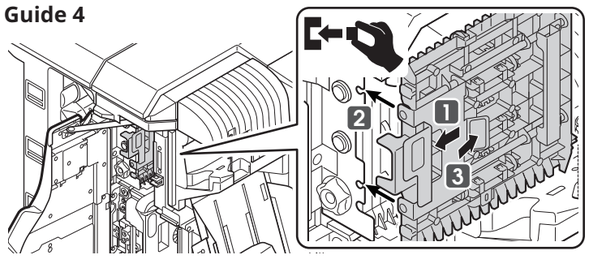

How to remove the Jammed Note

Guide 5

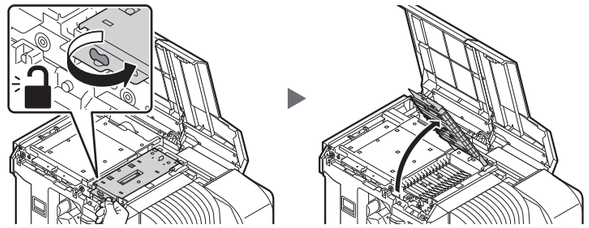

Guide 6

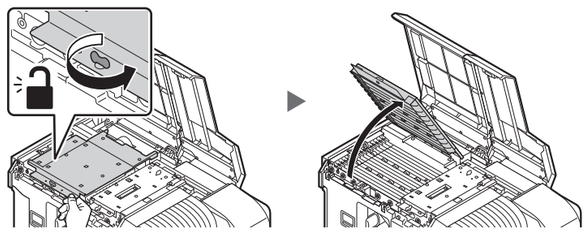

Guide 7

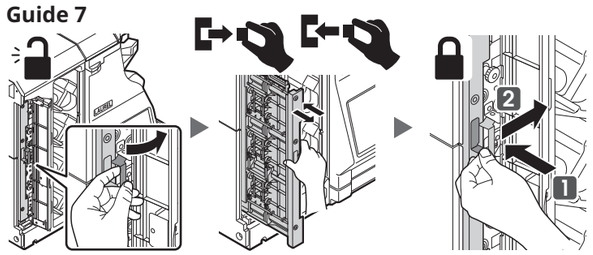

Cleaning Dust Tray

Dust Tray1

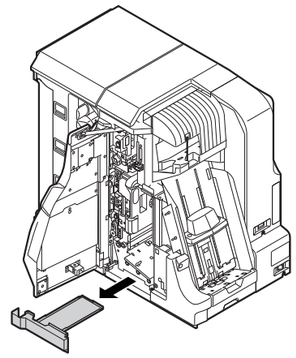
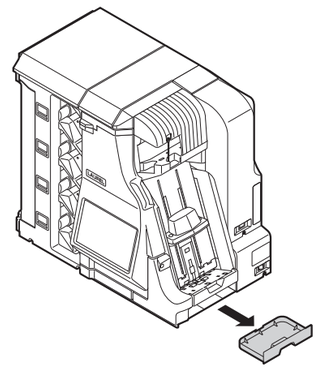
Dust Tray2